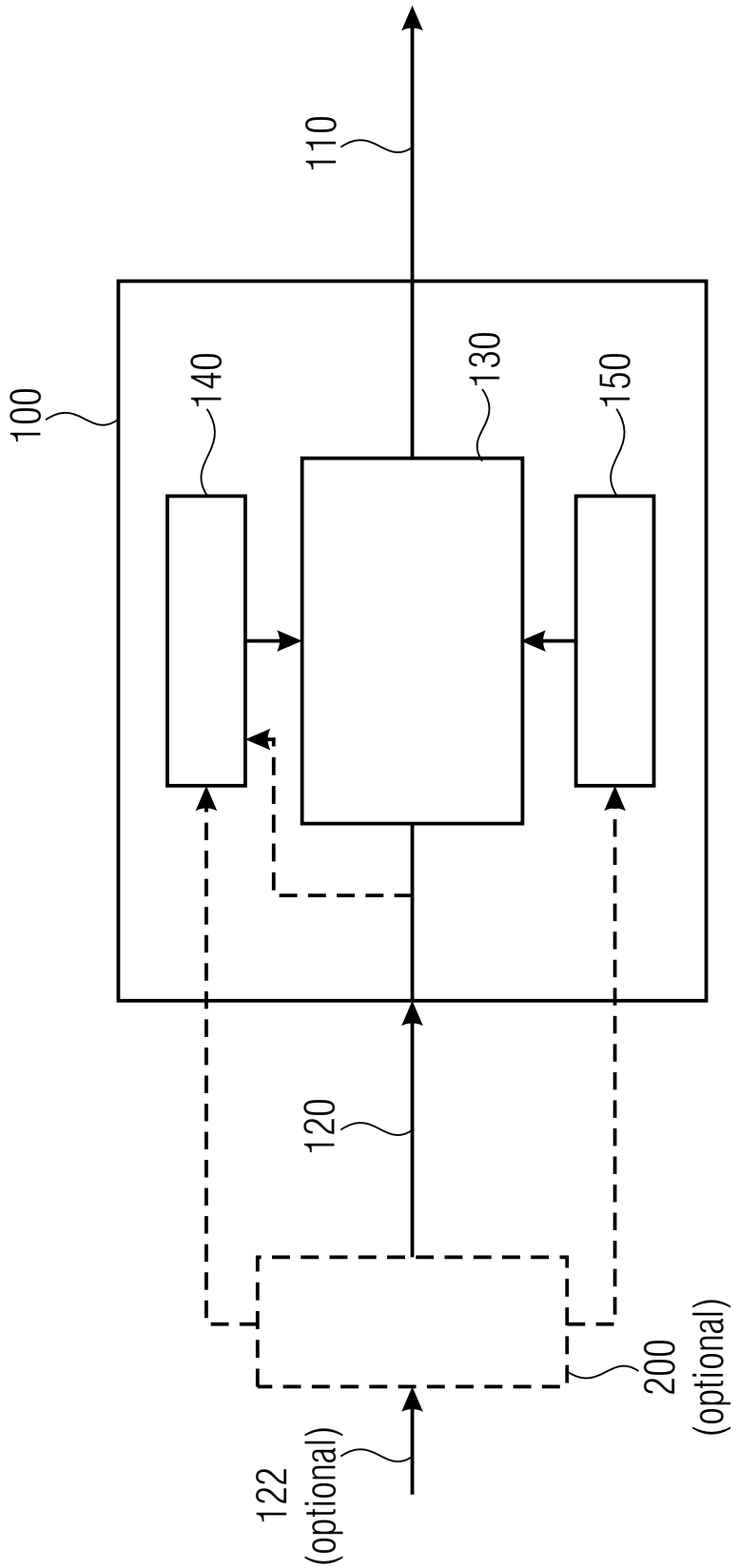

Fig. 1a

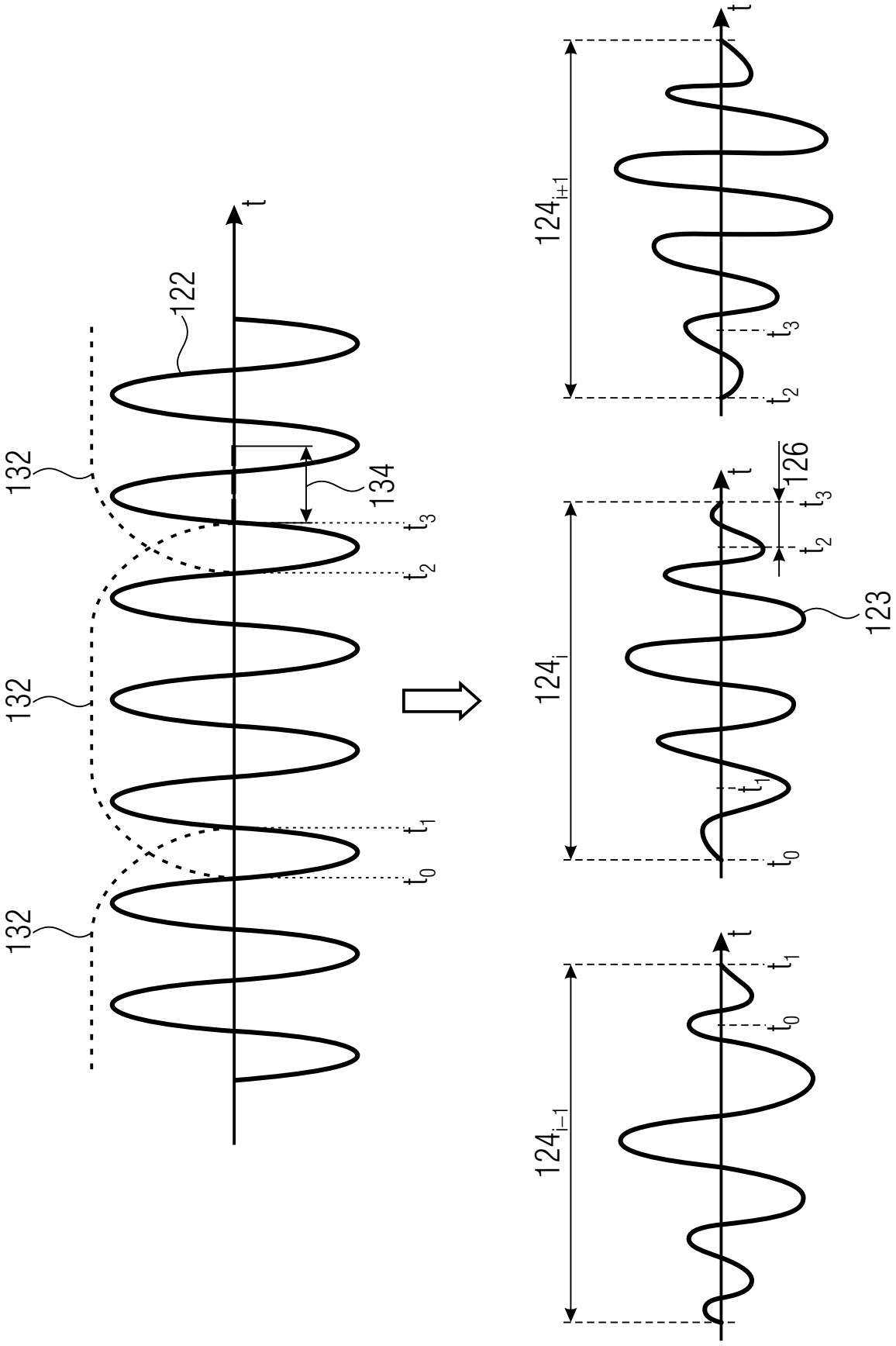

Fig. 1b

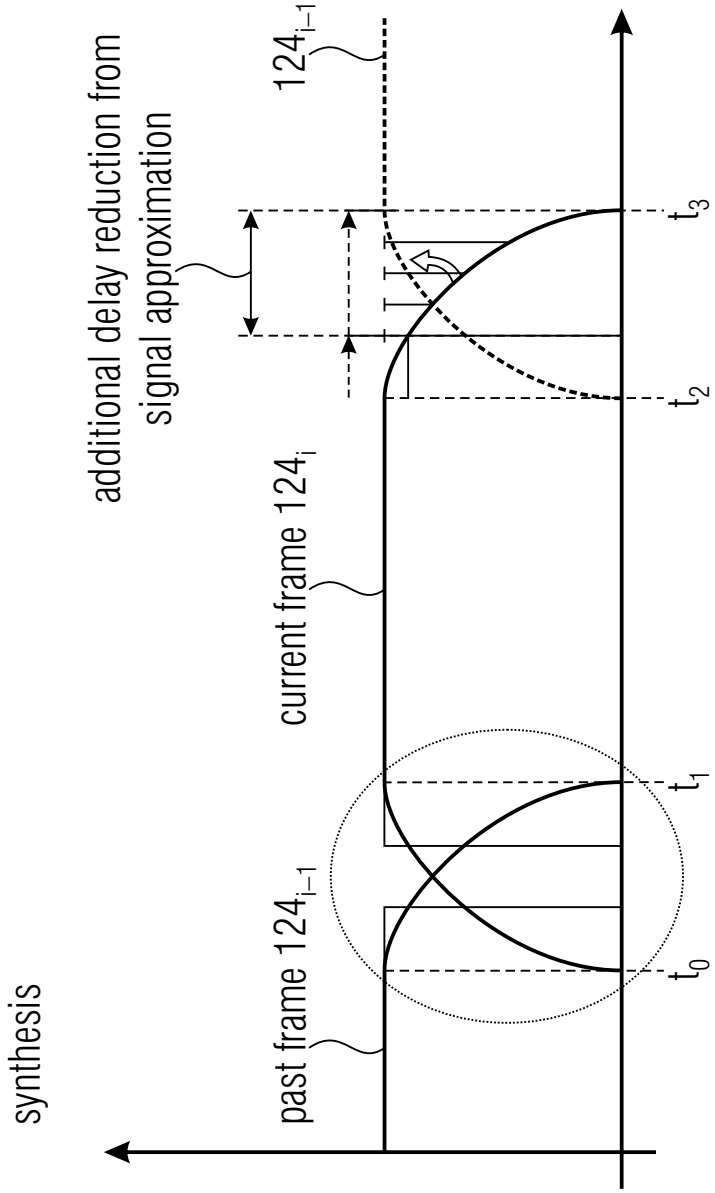
synthesis
past frame 124_{i-1}
current frame 124_i
124_{i-1}
additional delay reduction from signal approximation
t_0
t_1
t_2
t_3

Fig. 1c

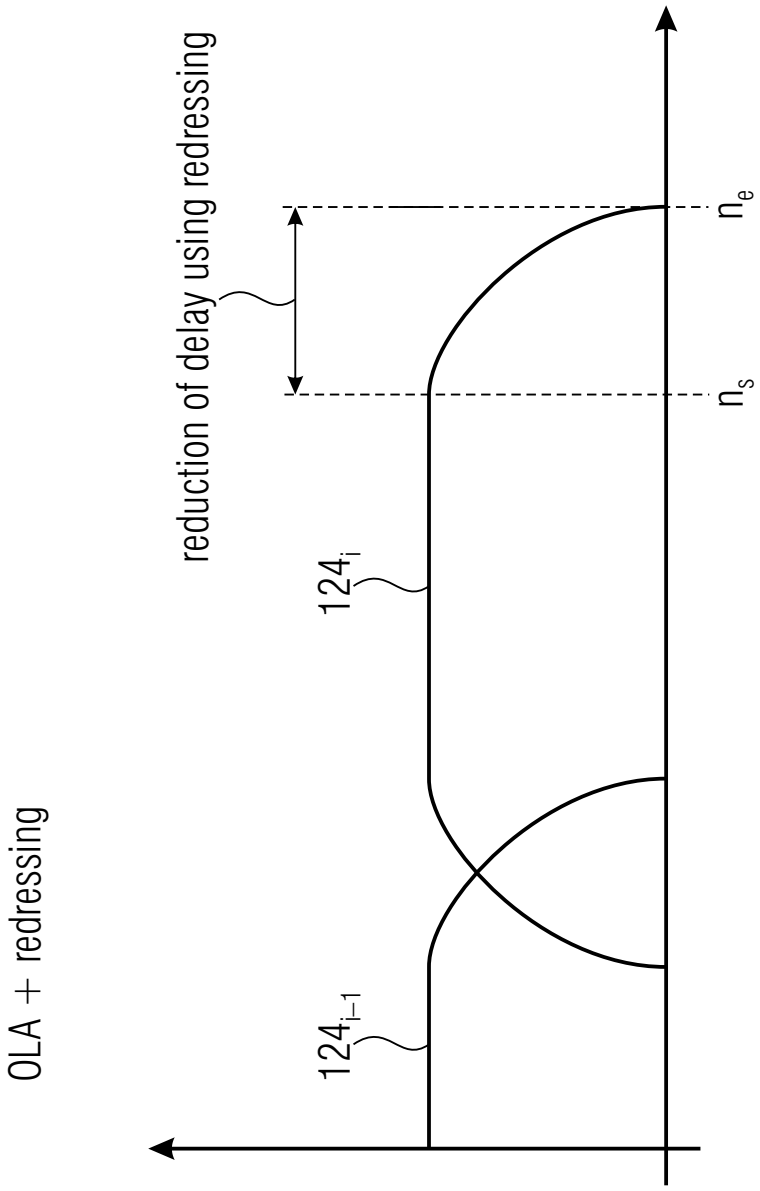
OLA + redressing
reduction of delay using redressing
124_{i-1}
124_i
n_s
n_e

Fig. 1d

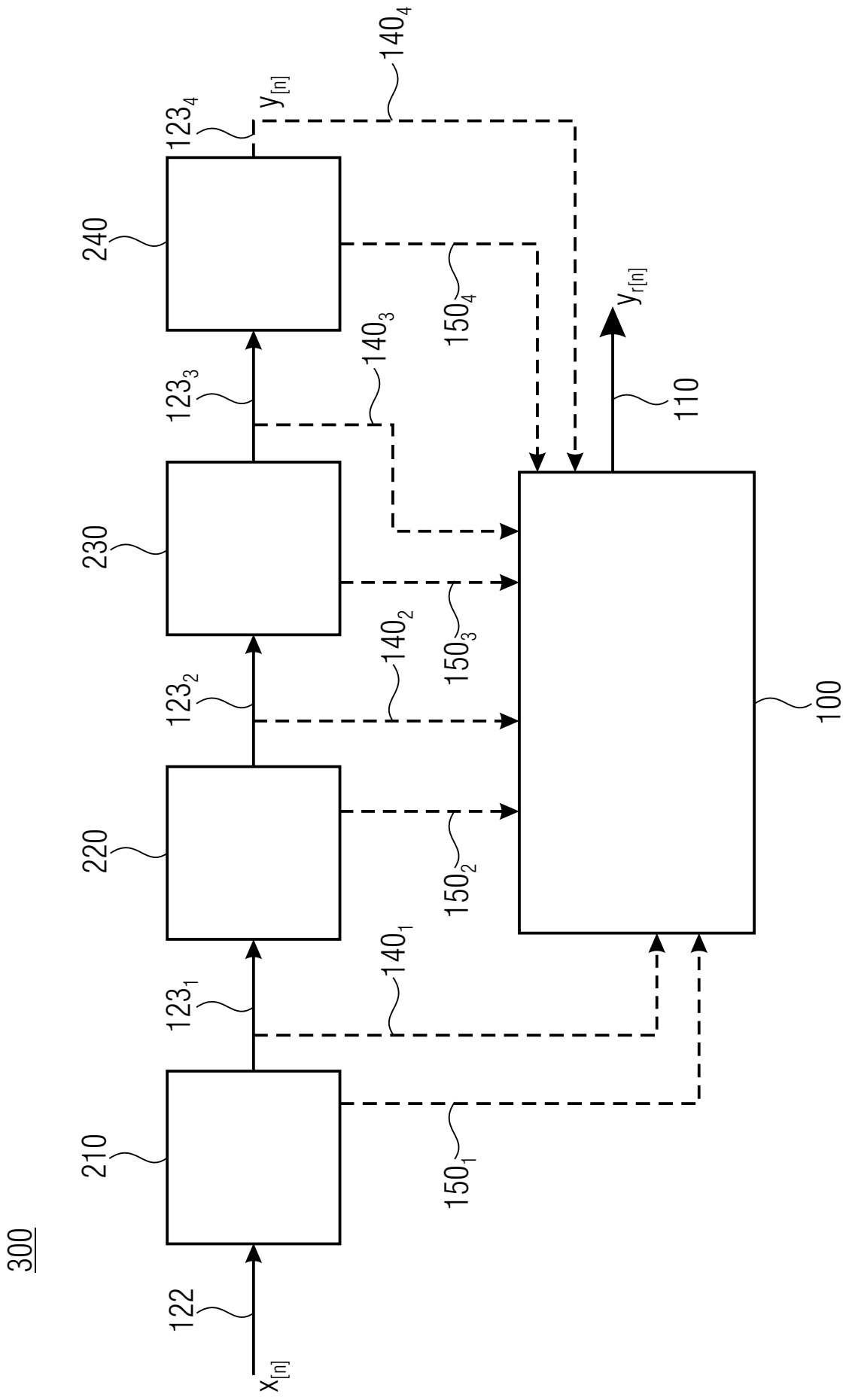
300
210
220
230
240
100
110
122
$x_{[n]}$
$y_{[n]}$
$y_{r[n]}$
123_1
123_2
123_3
123_4
140_1
140_2
140_3
140_4
150_1
150_2
150_3
150_4

Fig. 2

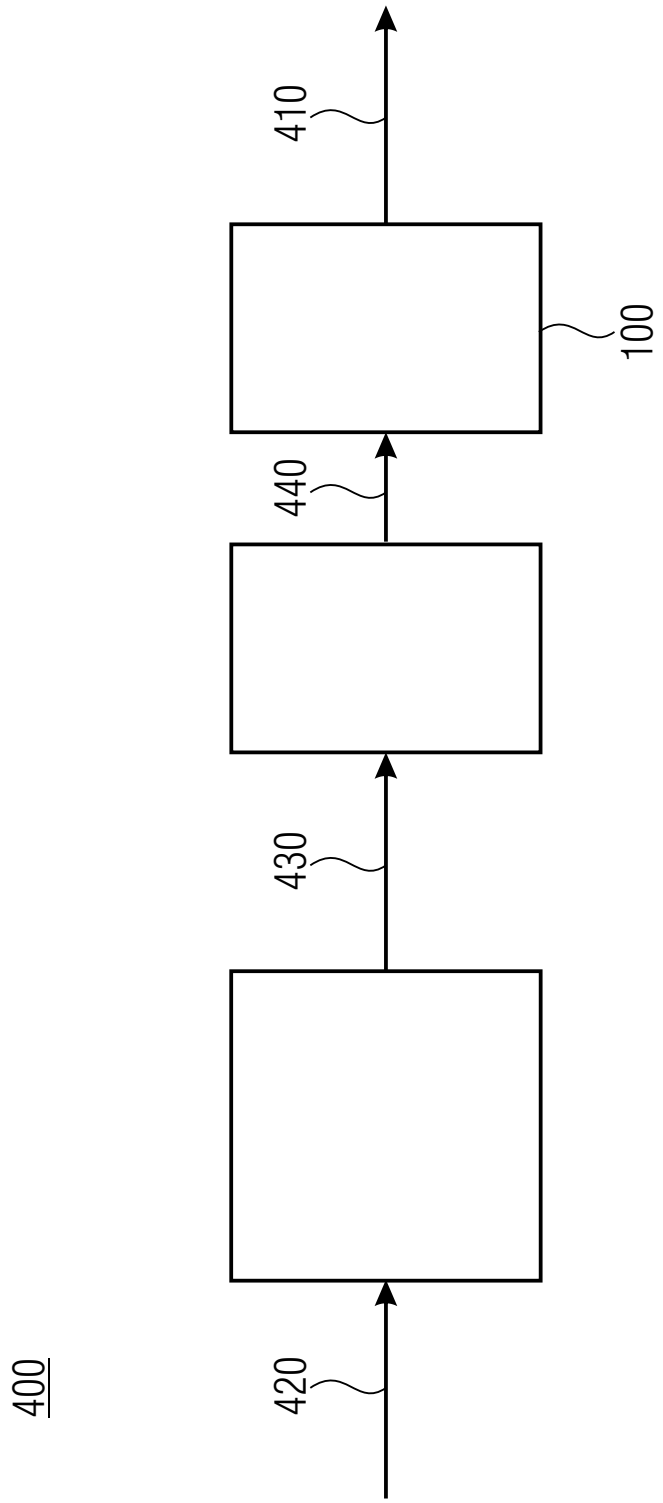

Fig. 3

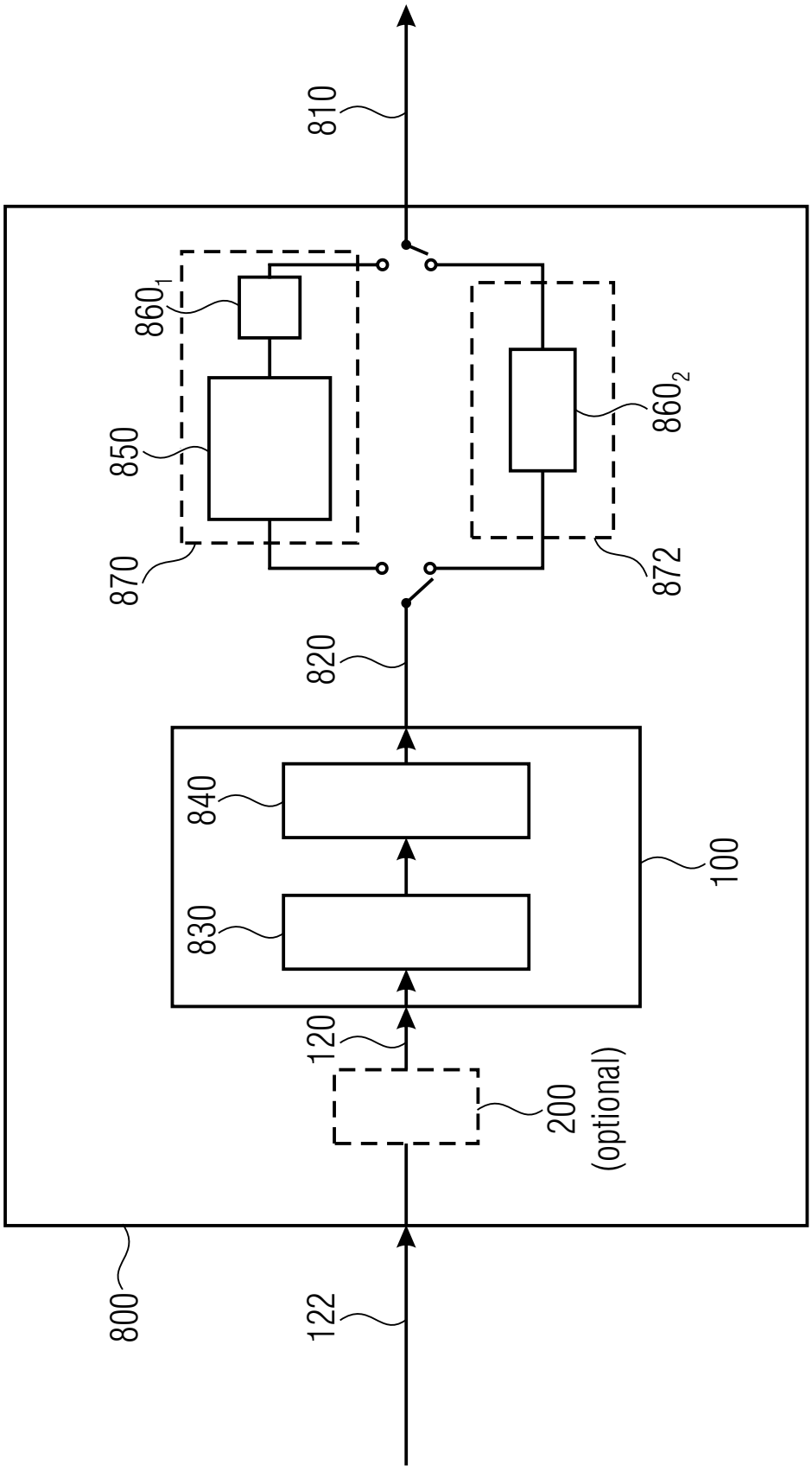
810
860$_1$
850
870
860$_2$
872
820
840
830
100
120
200
(optional)
800
122

Fig. 4

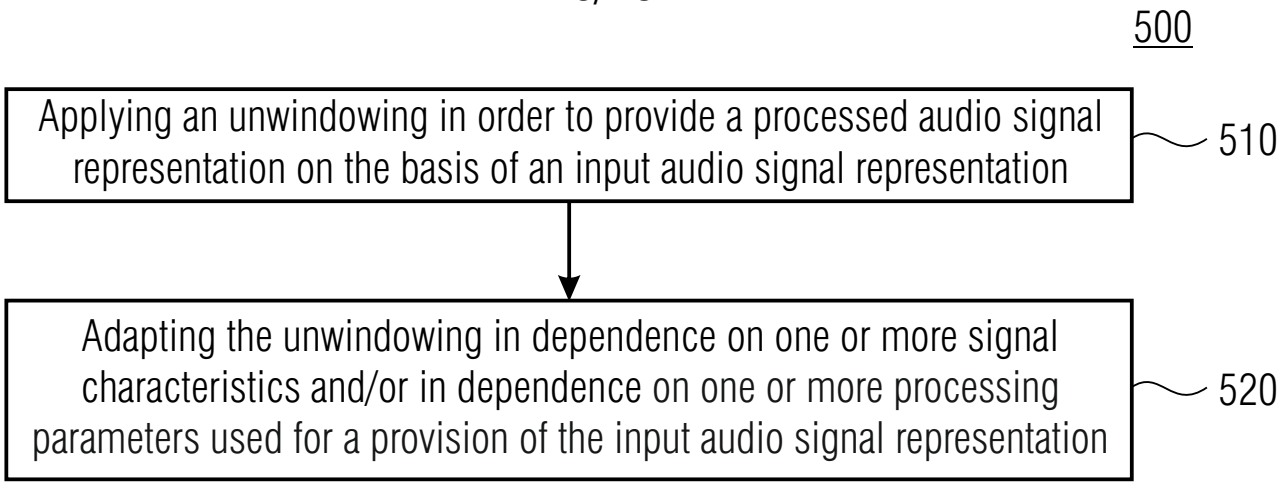
500
Applying an unwindowing in order to provide a processed audio signal representation on the basis of an input audio signal representation
510
Adapting the unwindowing in dependence on one or more signal characteristics and/or in dependence on one or more processing parameters used for a provision of the input audio signal representation
520

Fig. 5a

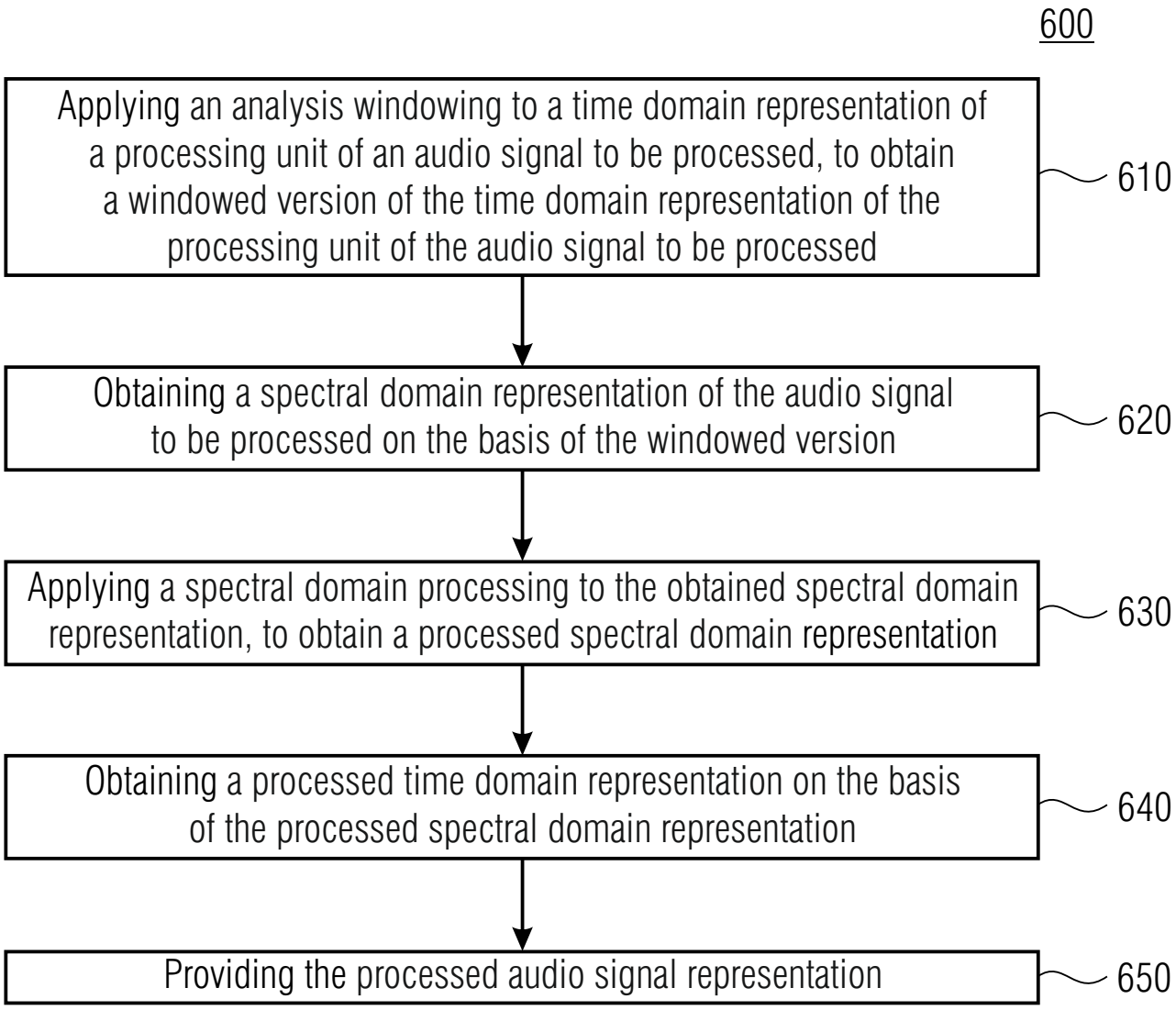
600
Applying an analysis windowing to a time domain representation of a processing unit of an audio signal to be processed, to obtain a windowed version of the time domain representation of the processing unit of the audio signal to be processed
610
Obtaining a spectral domain representation of the audio signal to be processed on the basis of the windowed version
620
Applying a spectral domain processing to the obtained spectral domain representation, to obtain a processed spectral domain representation
630
Obtaining a processed time domain representation on the basis of the processed spectral domain representation
640
Providing the processed audio signal representation
650

Fig. 5b

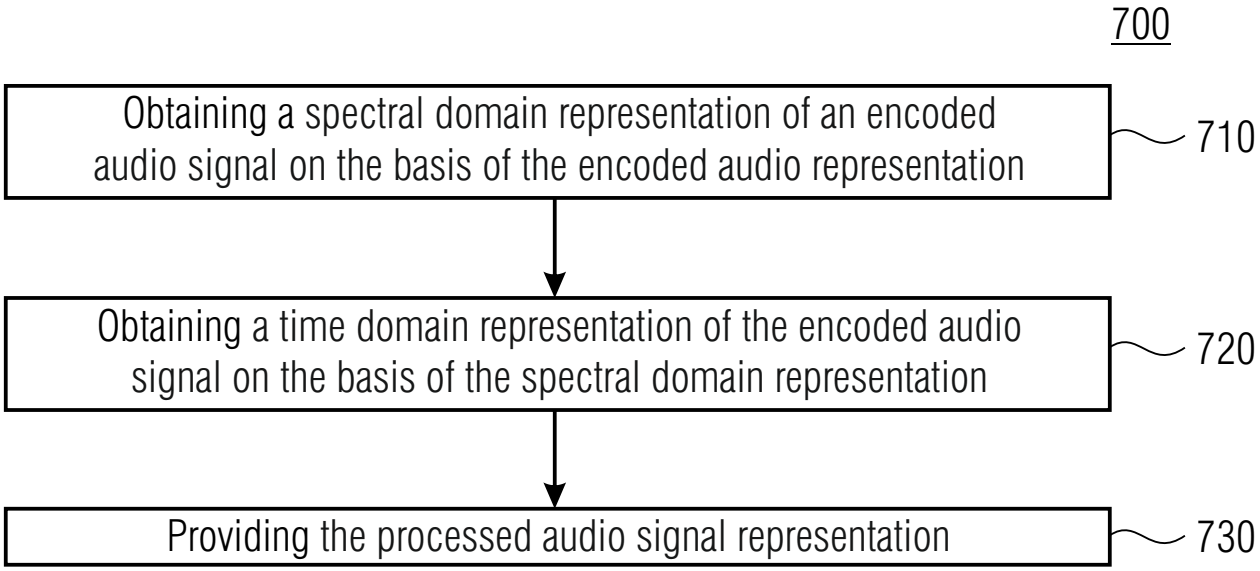
700
Obtaining a spectral domain representation of an encoded audio signal on the basis of the encoded audio representation
710
Obtaining a time domain representation of the encoded audio signal on the basis of the spectral domain representation
720
Providing the processed audio signal representation
730

Fig. 5c

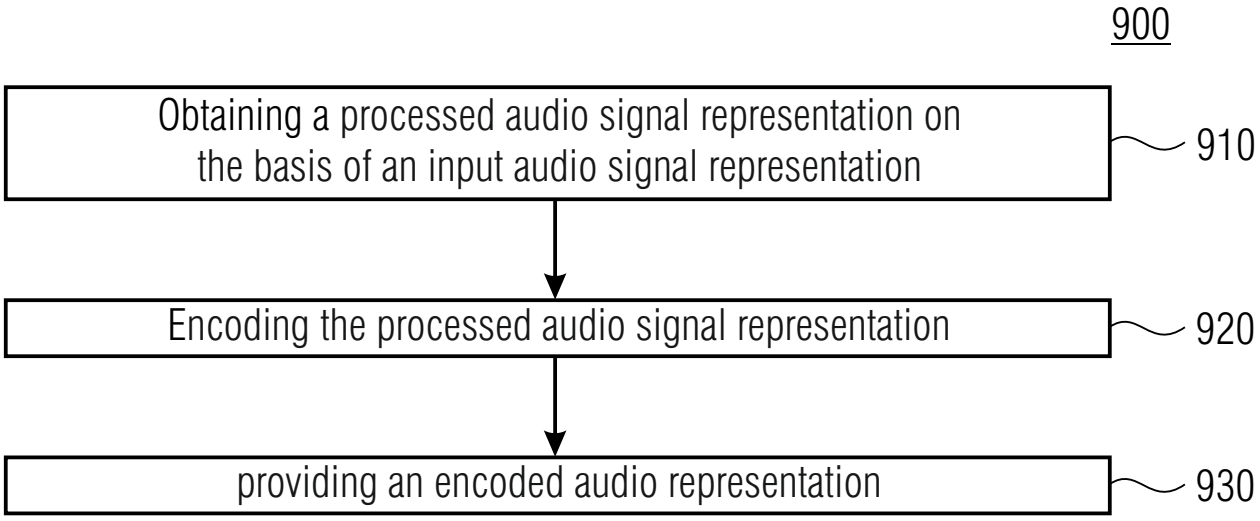
900
Obtaining a processed audio signal representation on the basis of an input audio signal representation
910
Encoding the processed audio signal representation
920
providing an encoded audio representation
930

Fig. 5d

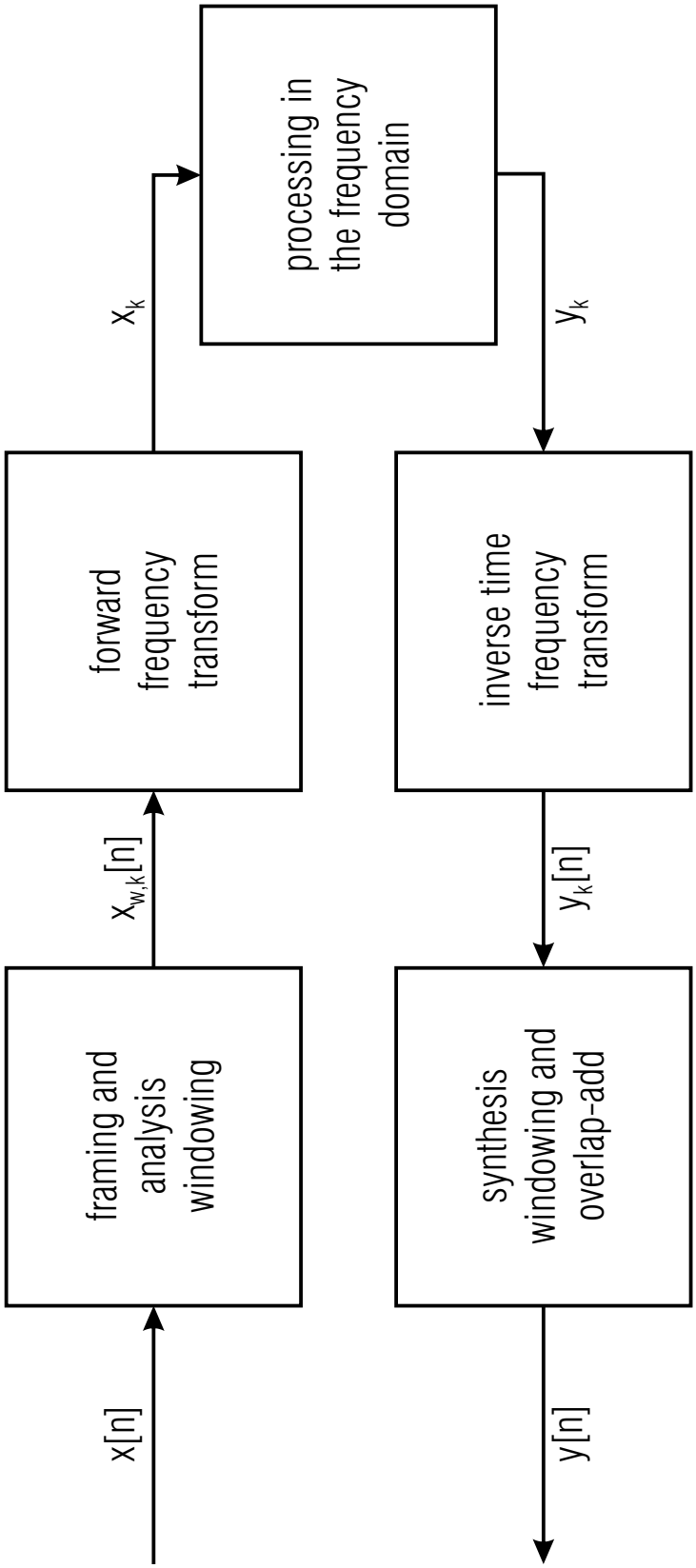
x[n]
framing and analysis windowing
$x_{w,k}[n]$
forward frequency transform
x_k
processing in the frequency domain
y_k
inverse time frequency transform
$y_k[n]$
synthesis windowing and overlap-add
y[n]

Fig. 6

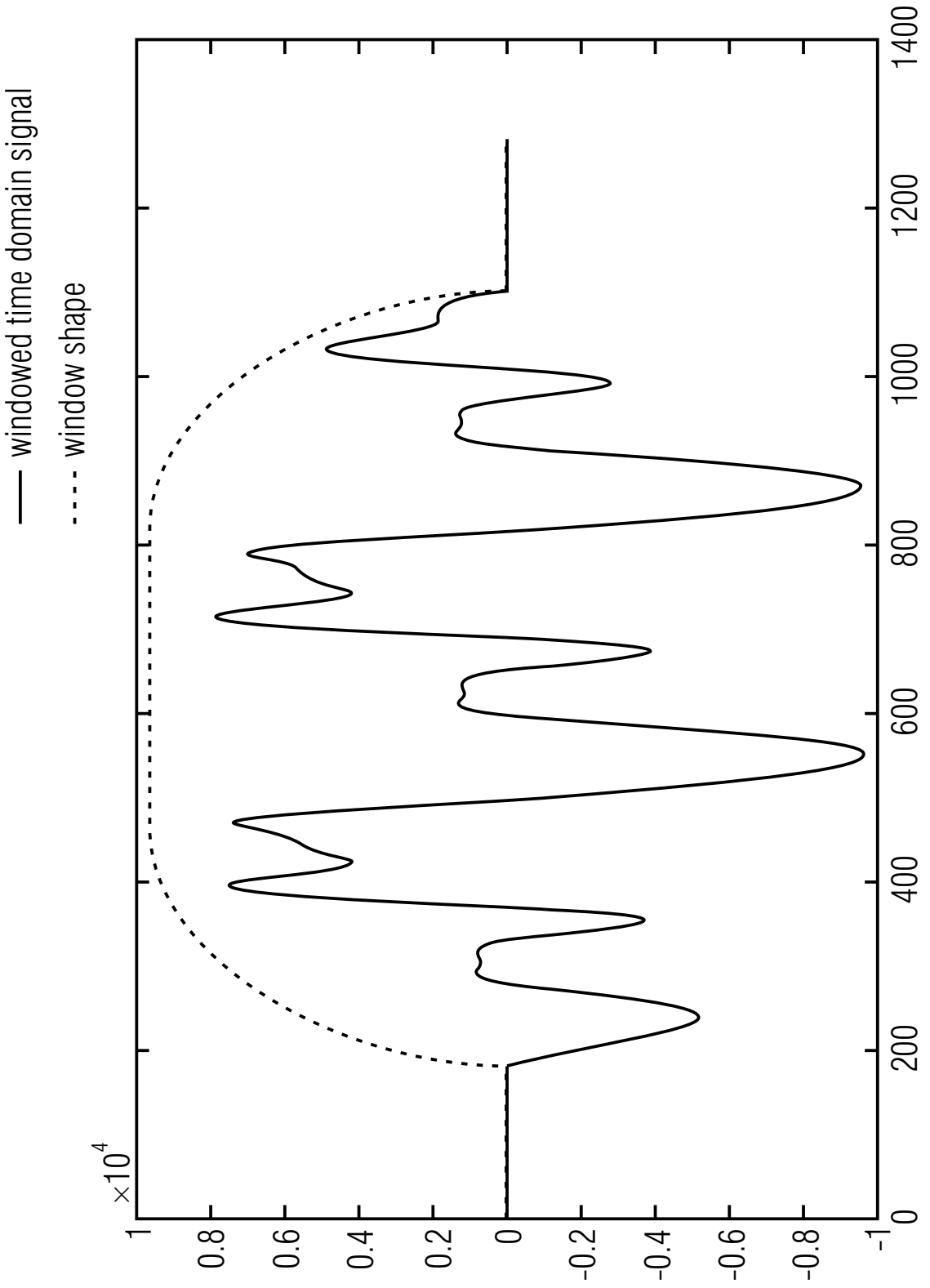
windowed time domain signal
window shape
×10^4
1
0.8
0.6
0.4
0.2
0
-0.2
-0.4
-0.6
-0.8
-1
0
200
400
600
800
1000
1200
1400

Fig. 7

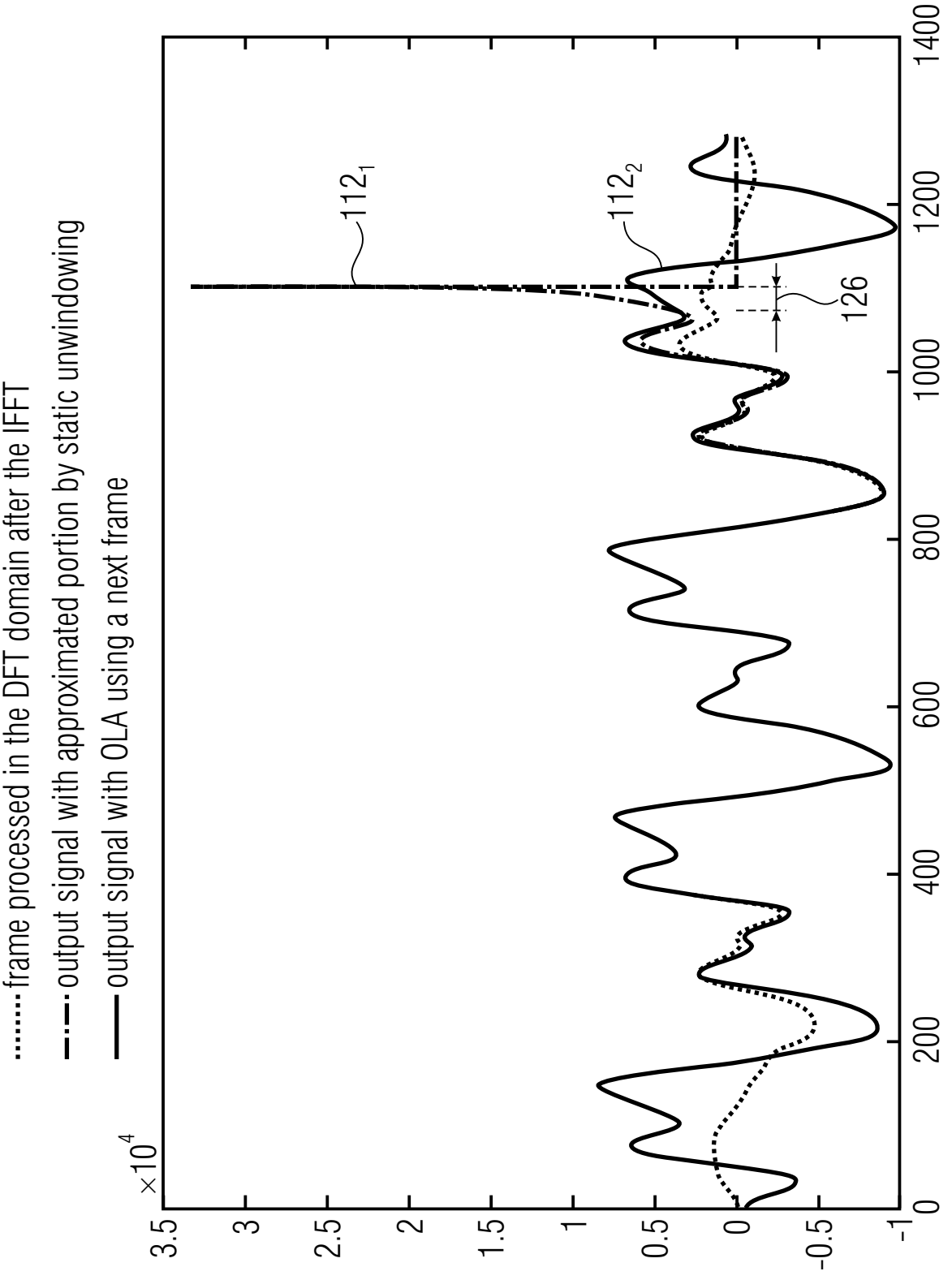
frame processed in the DFT domain after the IFFT
output signal with approximated portion by static unwindowing
output signal with OLA using a next frame
×10^4
3.5
3
2.5
2
1.5
1
0.5
0
-0.5
-1
0
200
400
600
800
1000
1200
1400
112_1
112_2
126

Fig. 8

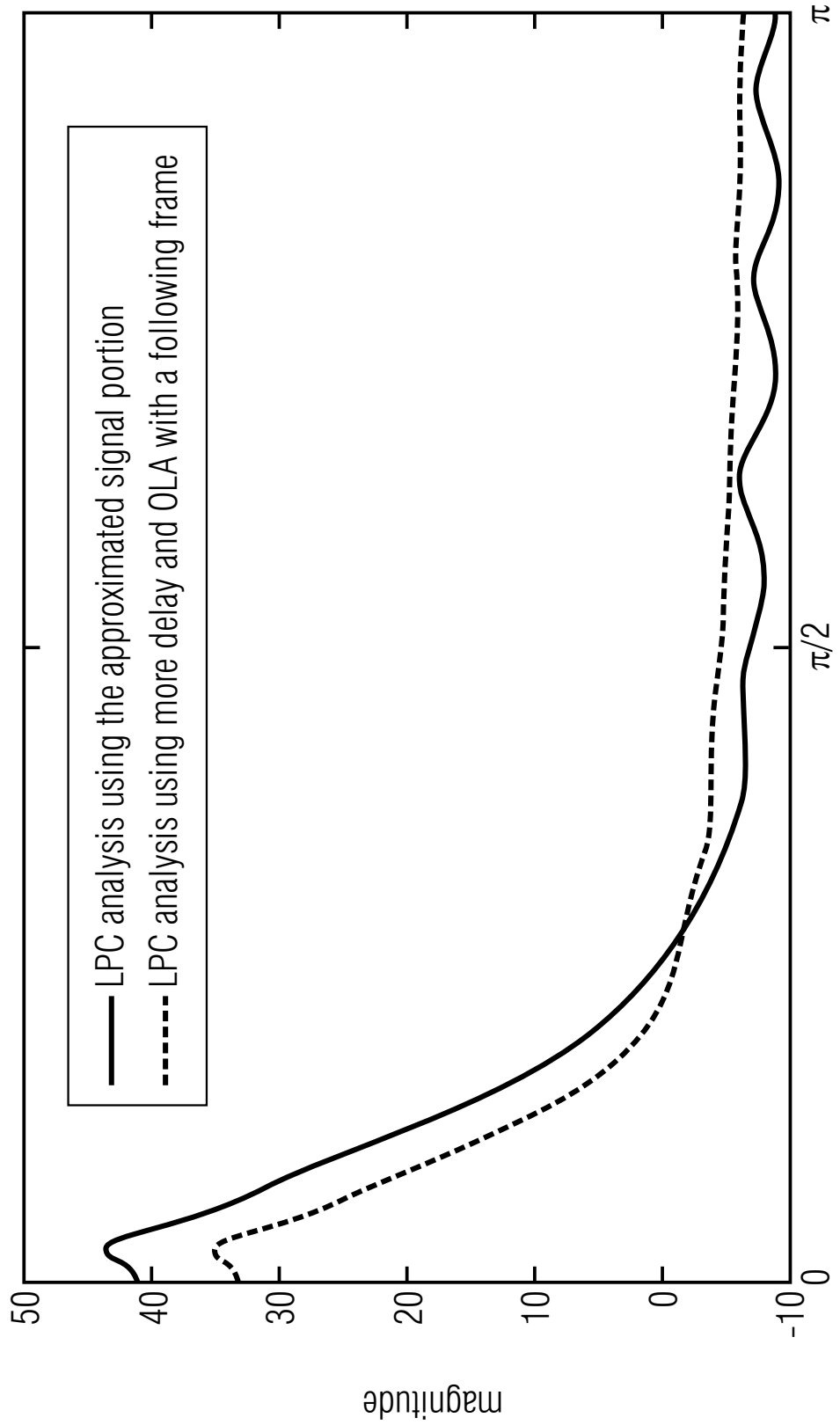
LPC analysis using the approximated signal portion
LPC analysis using more delay and OLA with a following frame
magnitude
50
40
30
20
10
0
-10
0
π/2
π
frequency

Fig. 9