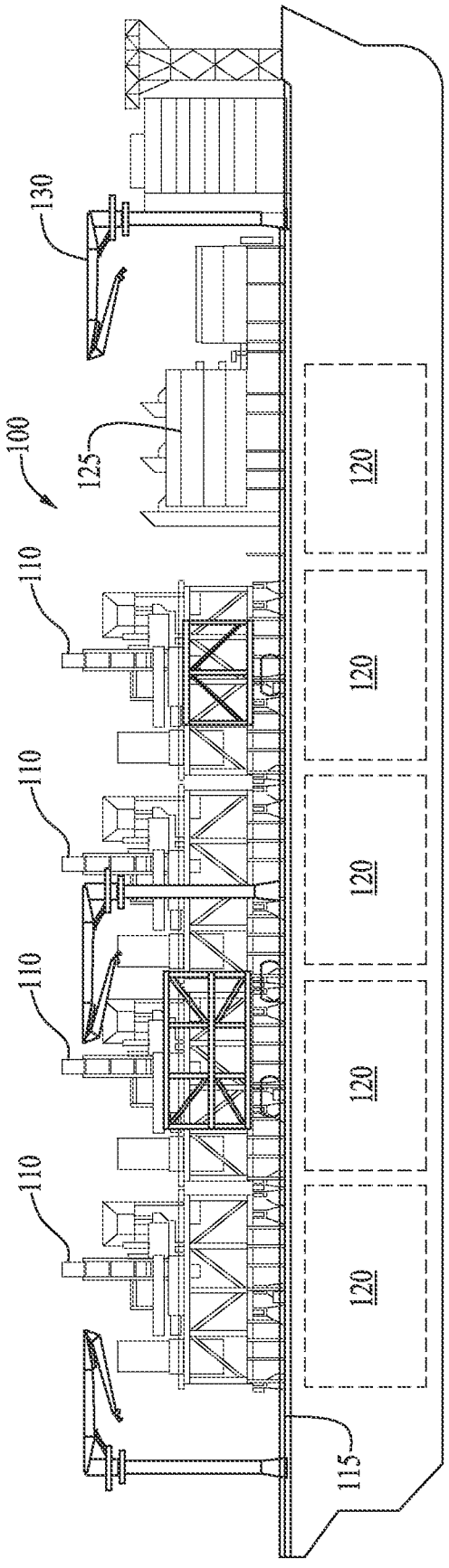
130
125
100
110
110
110
110
120
120
120
120
115

Fig. 1A

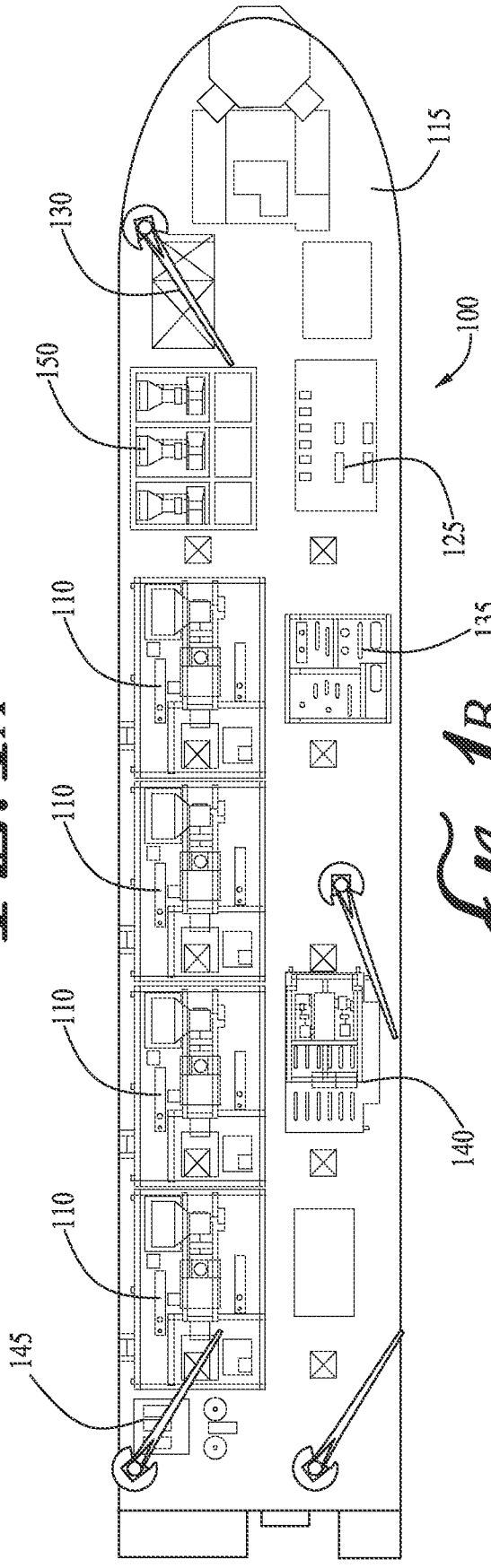
115
130
100
150
125
110
135
110
110
140
110
145

Fig. 1B

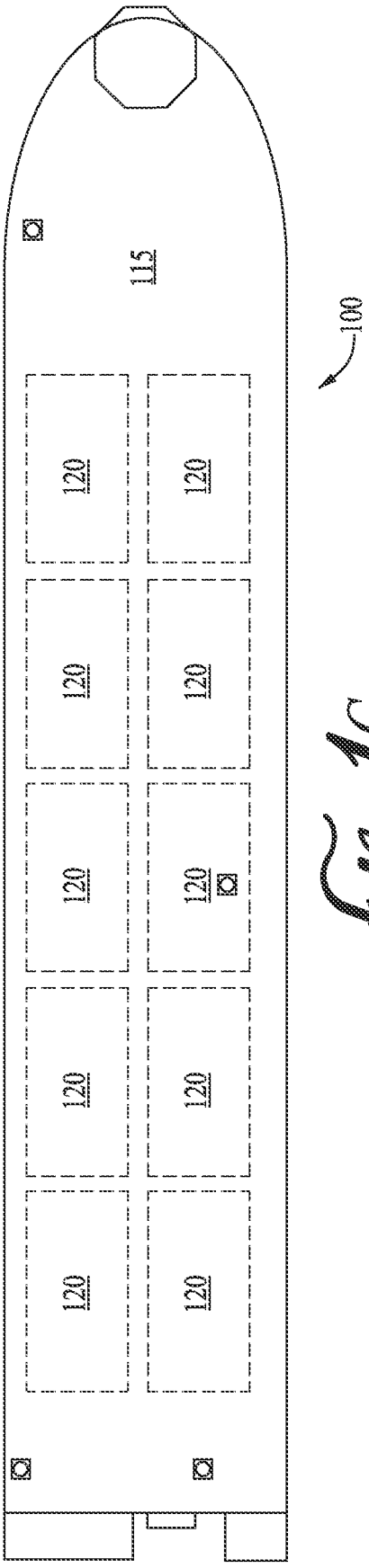

Fig. 1C

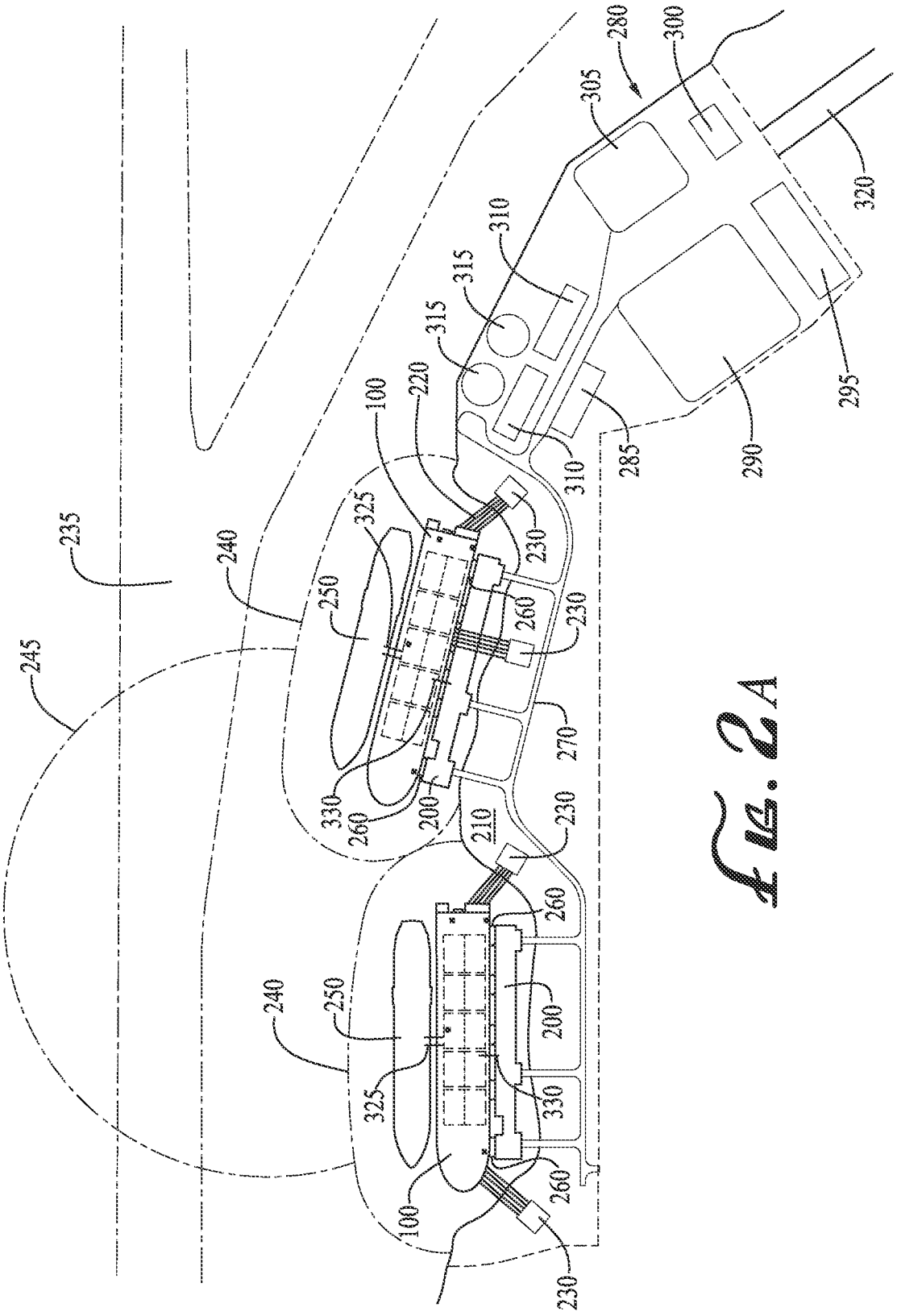
280
300
305
320
310
315
315
220
100
285
290
295
310
235
240
325
230
250
260
230
245
270
330
260
200
210
230
260
240
250
200
325
330
260
100
230

FIG. 2A

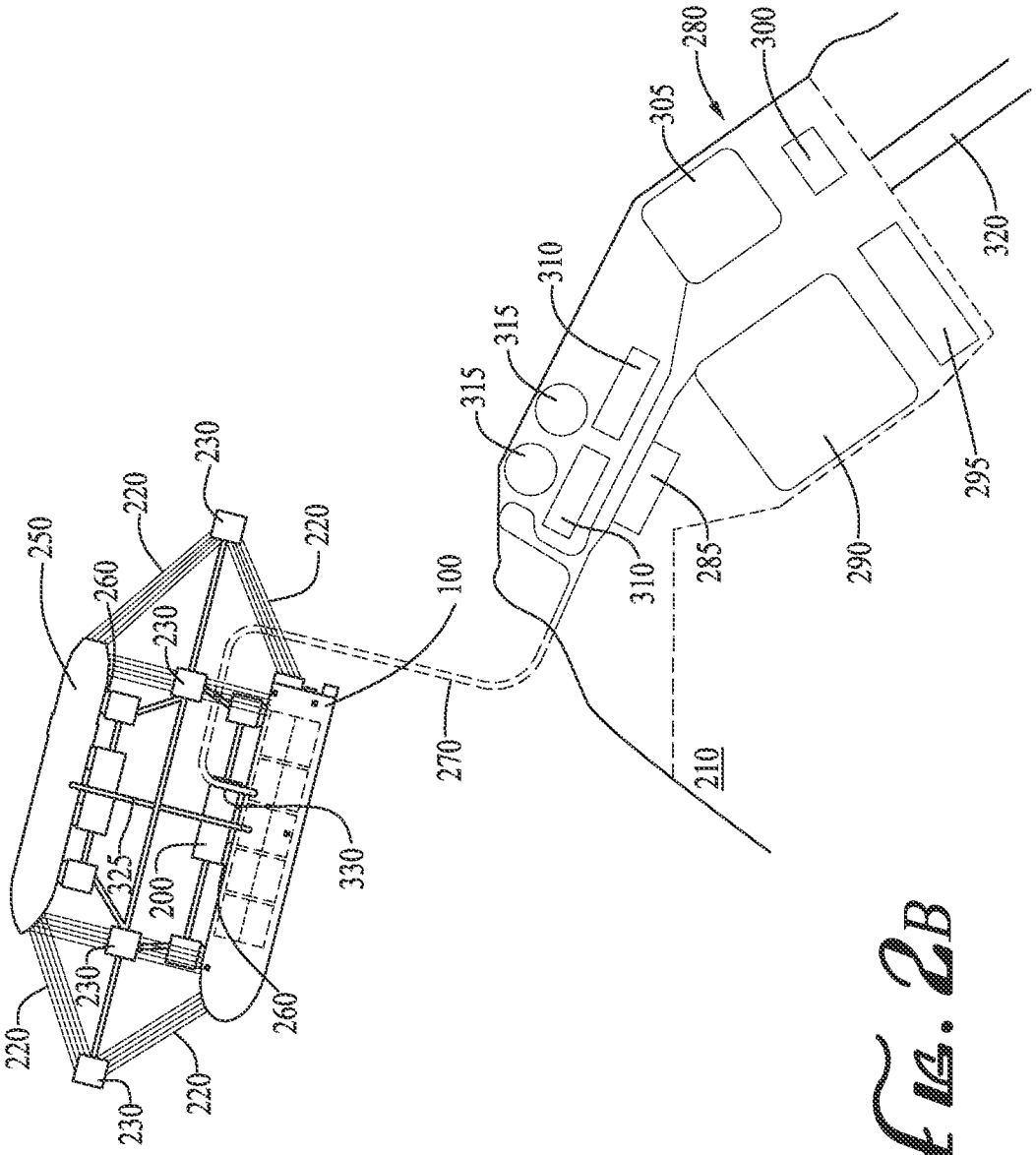
280
300
305
320
310
315
315
295
290
285
310
100
270
210
230
220
220
250
260
230
330
325
200
230
260
220
220
230

FIG. 2B

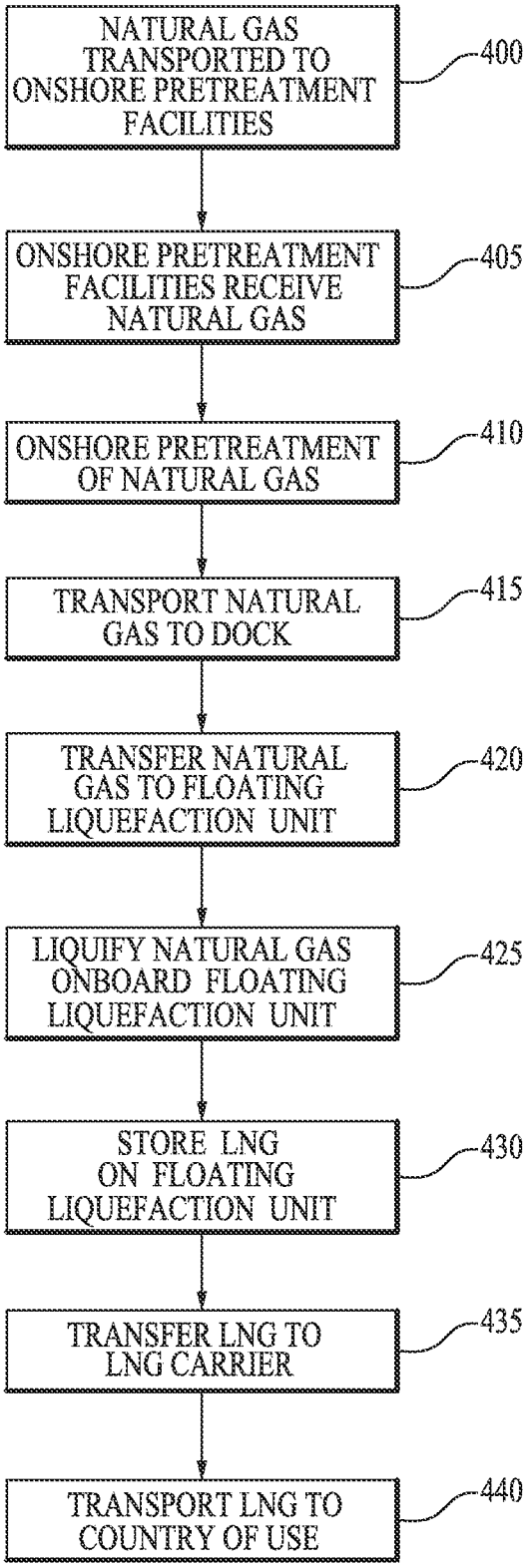
NATURAL GAS TRANSPORTED TO ONSHORE PRETREATMENT FACILITIES
400
ONSHORE PRETREATMENT FACILITIES RECEIVE NATURAL GAS
405
ONSHORE PRETREATMENT OF NATURAL GAS
410
TRANSPORT NATURAL GAS TO DOCK
415
TRANSFER NATURAL GAS TO FLOATING LIQUEFACTION UNIT
420
LIQUIFY NATURAL GAS ONBOARD FLOATING LIQUEFACTION UNIT
425
STORE LNG ON FLOATING LIQUEFACTION UNIT
430
TRANSFER LNG TO LNG CARRIER
435
TRANSPORT LNG TO COUNTRY OF USE
440

Fig. 3