(12) INTERNATIONAL APPLICATION PUBLISHED UNDER THE PATENT COOPERATION TREATY (PCT)

(19) World Intellectual Property Organization
International Bureau

(43) International Publication Date
1 April 2010 (01.04.2010)

PCT

(10) International Publication Number
WO 2010/037079 A3

(51) International Patent Classification:
B26B 21/40 (2006.01)

(21) International Application Number:
PCT/US2009/058698

(22) International Filing Date:
29 September 2009 (29.09.2009)

(25) Filing Language: English

(26) Publication Language: English

(30) Priority Data:
61/101,038 29 September 2008 (29.09.2008) US

(71) Applicant *(for all designated States except US)*: **THE GILLETTE COMPANY** [US/US]; Prudential Tower Building, Boston, Massachusetts 02199 (US).

(72) Inventors; and

(75) Inventors/Applicants *(for US only)*: **PETERSON, Mark** [GB/GB]; The Oaks, Basingstoke Road, Three Mile Cross, Reading Berkshire RG7 1AS (GB). **COWLEY, Kevin, David** [GB/GB]; 460 Basingstoke Road, Reading Berkshire RG2 0QE (GB). **OGLESBY, Oliver, David** [GB/GB]; Delmore, Shop Lane, Leckhampstead, Newbury Berkshire RG20 8QY (GB).

(74) Common Representative: **THE GILLETTE COMPANY**; c/o Eileen L. Hughett, The Procter & Gamble Company, Global Patent Services, 299 East Sixth Street, Sycamore Building, 4th Floor Cincinnati, Ohio 45202 (US).

(81) Designated States *(unless otherwise indicated, for every kind of national protection available)*: AE, AG, AL, AM, AO, AT, AU, AZ, BA, BB, BG, BH, BR, BW, BY, BZ, CA, CH, CL, CN, CO, CR, CU, CZ, DE, DK, DM, DO, DZ, EC, EE, EG, ES, FI, GB, GD, GE, GH, GM, GT, HN, HR, HU, ID, IL, IN, IS, JP, KE, KG, KM, KN, KP, KR, KZ, LA, LC, LK, LR, LS, LT, LU, LY, MA, MD, ME, MG, MK, MN, MW, MX, MY, MZ, NA, NG, NI, NO, NZ, OM, PE, PG, PH, PL, PT, RO, RS, RU, SC, SD, SE, SG, SK, SL, SM, ST, SV, SY, TJ, TM, TN, TR, TT, TZ, UA, UG, US, UZ, VC, VN, ZA, ZM, ZW.

(84) Designated States *(unless otherwise indicated, for every kind of regional protection available)*: ARIPO (BW, GH, GM, KE, LS, MW, MZ, NA, SD, SL, SZ, TZ, UG, ZM, ZW), Eurasian (AM, AZ, BY, KG, KZ, MD, RU, TJ, TM), European (AT, BE, BG, CH, CY, CZ, DE, DK, EE, ES, FI, FR, GB, GR, HR, HU, IE, IS, IT, LT, LU, LV, MC, MK, MT, NL, NO, PL, PT, RO, SE, SI, SK, SM, TR), OAPI (BF, BJ, CF, CG, CI, CM, GA, GN, GQ, GW, ML, MR, NE, SN, TD, TG).

[Continued on next page]

(54) Title: RAZORS AND RAZOR CARTRIDGES WITH A DECREASED TOTAL INTERBLADE SPAN

FIG. 1

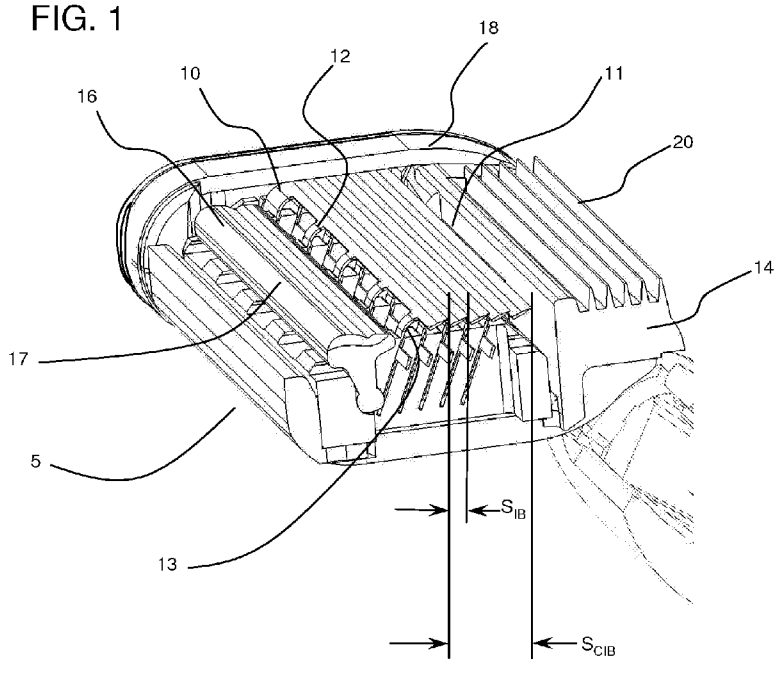

(57) Abstract: A wet shaving razor cartridge (5) that comprises a plurality of at least five elongate blade assemblies (10) disposed in parallel between a guard (14) and a cap (17) of a housing (18), each blade assembly having a sharp cutting edge (11); wherein said blade assemblies exhibit a cumulative interblade span of no greater than about 3 mm. Also, a wet shaving razor cartridge that comprise a plurality of at least four elongate blade assemblies disposed in parallel between a guard and a cap of a housing, each blade assembly having a sharp cutting edge; wherein said blade assemblies exhibit a cumulative interblade span of no greater than about 2.5 mm.

WO 2010/037079 A3

WO 2010/037079 A3

Published:

— *with international search report (Art. 21(3))*

— *before the expiration of the time limit for amending the claims and to be republished in the event of receipt of amendments (Rule 48.2(h))*

(88) Date of publication of the international search report:
24 June 2010