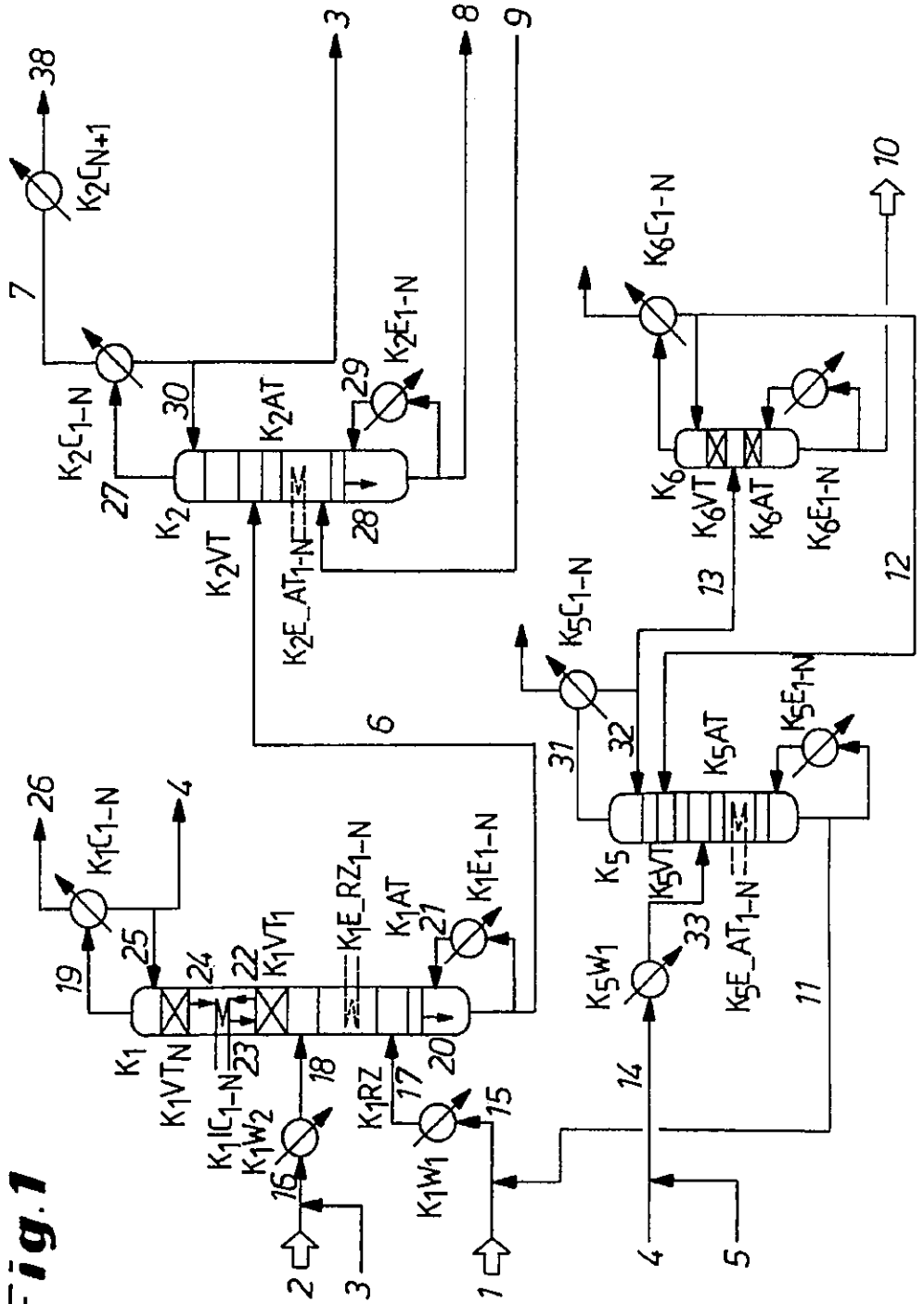
K1
K1VTN
K1C1-N
K1W2
K1RZ
K1W1
K1VT1
K1E_RZ1-N
K1AT
K1E1-N
K2
K2VT
K2E_AT1-N
K2AT
K2E1-N
K2C1-N
K2CN+1
K5
K5VT
K5W1
K5E_AT1-N
K5AT
K5E1-N
K5C1-N
K6
K6VT
K6AT
K6E1-N
K6C1-N
1
2
3
4
5
6
7
8
9
10
11
12
13
14
15
16
17
18
19
20
21
22
23
24
25
26
27
28
29
30
31
32
33
38

Fig.1

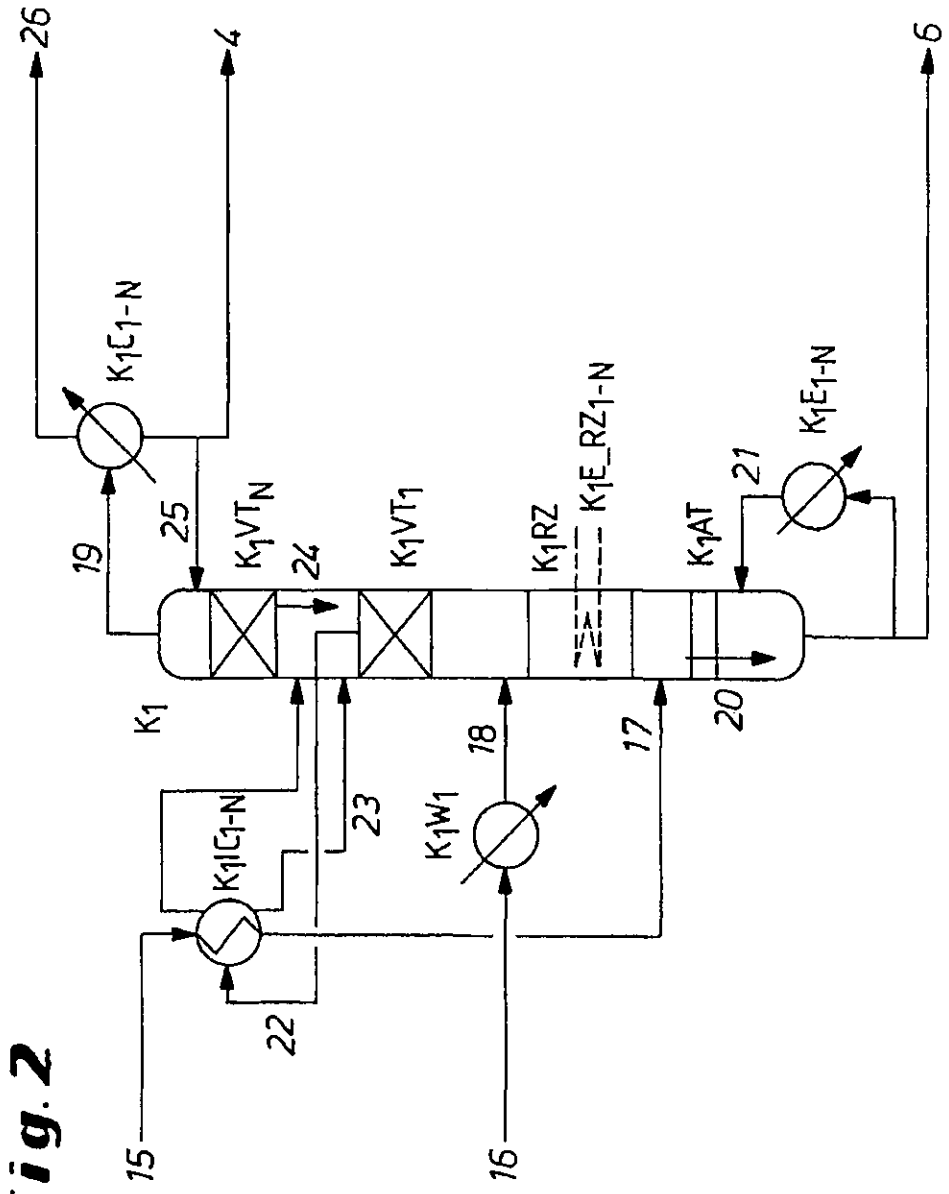
26
4
6
K1E1-N
19
25
K1VTN
24
K1VT1
K1RZ
K1E_RZ1-N
K1AT
21
K1E1-N
K1
20
18
17
23
K1W1
K1IC1-N
22
15
16

Fig. 2

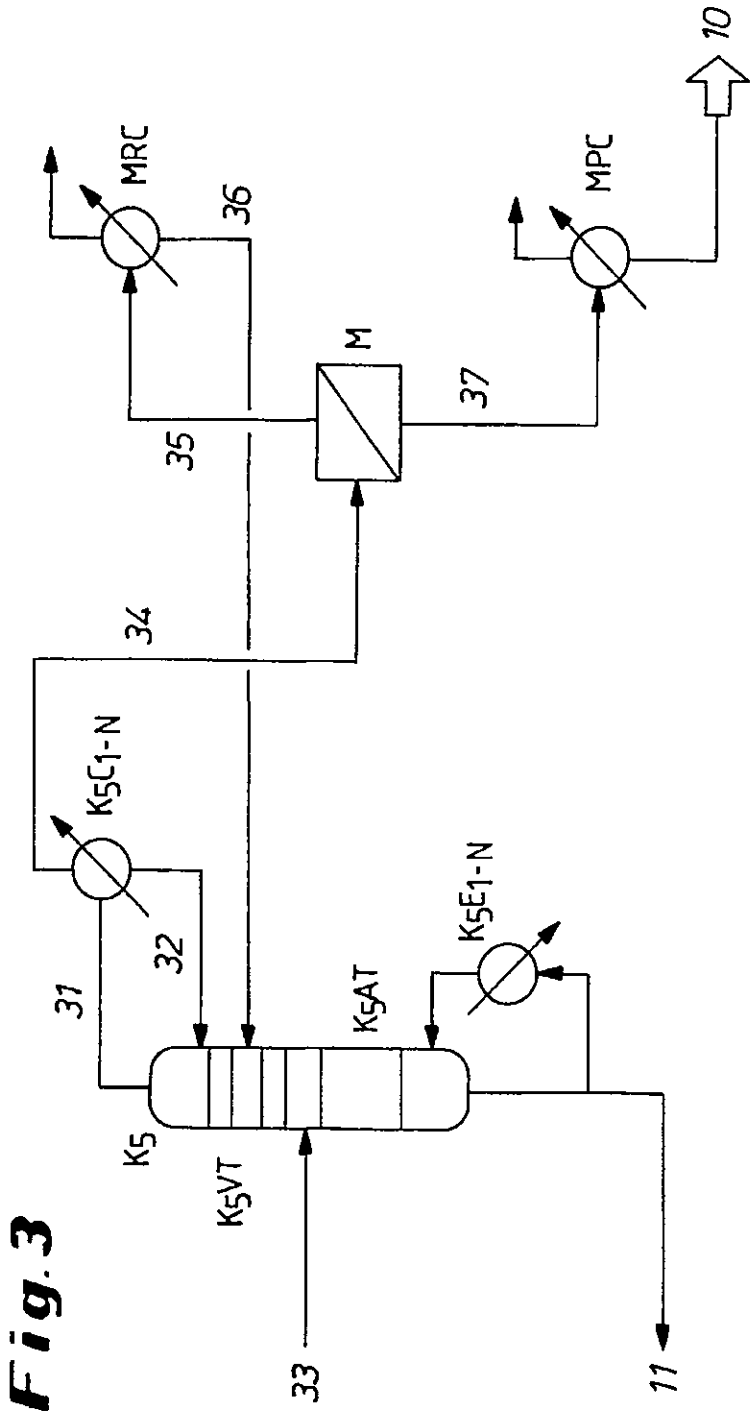

Fig.3

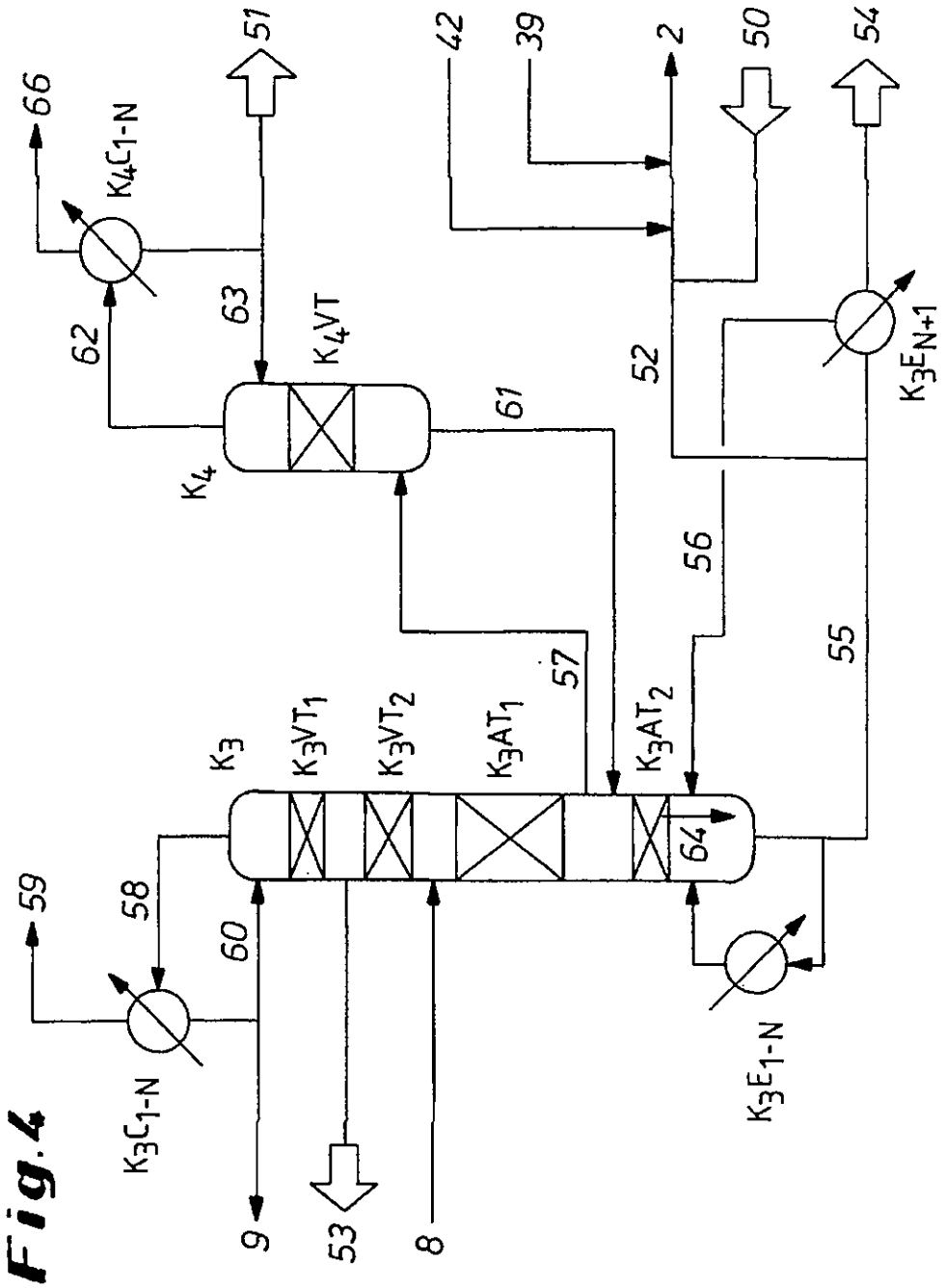
66
K_4C_{1-N}
51
42
39
2
50
54
62
63
K_4VT
52
K_3E_{N+1}
K_4
61
56
57
55
K_3
K_3VT_1
K_3VT_2
K_3AT_1
K_3AT_2
64
59
58
60
K_3C_{1-N}
K_3E_{1-N}
9
53
8

Fig.4

Fig.5b

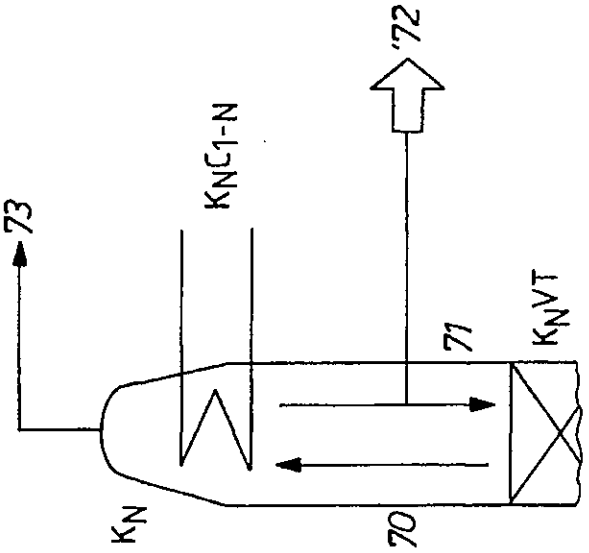

Fig.5a

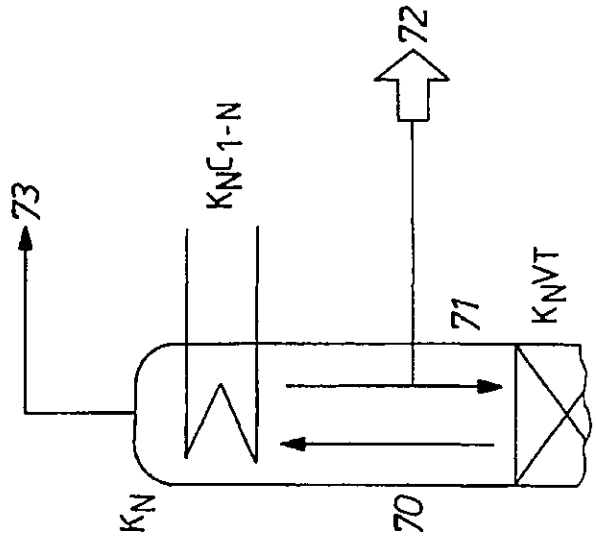

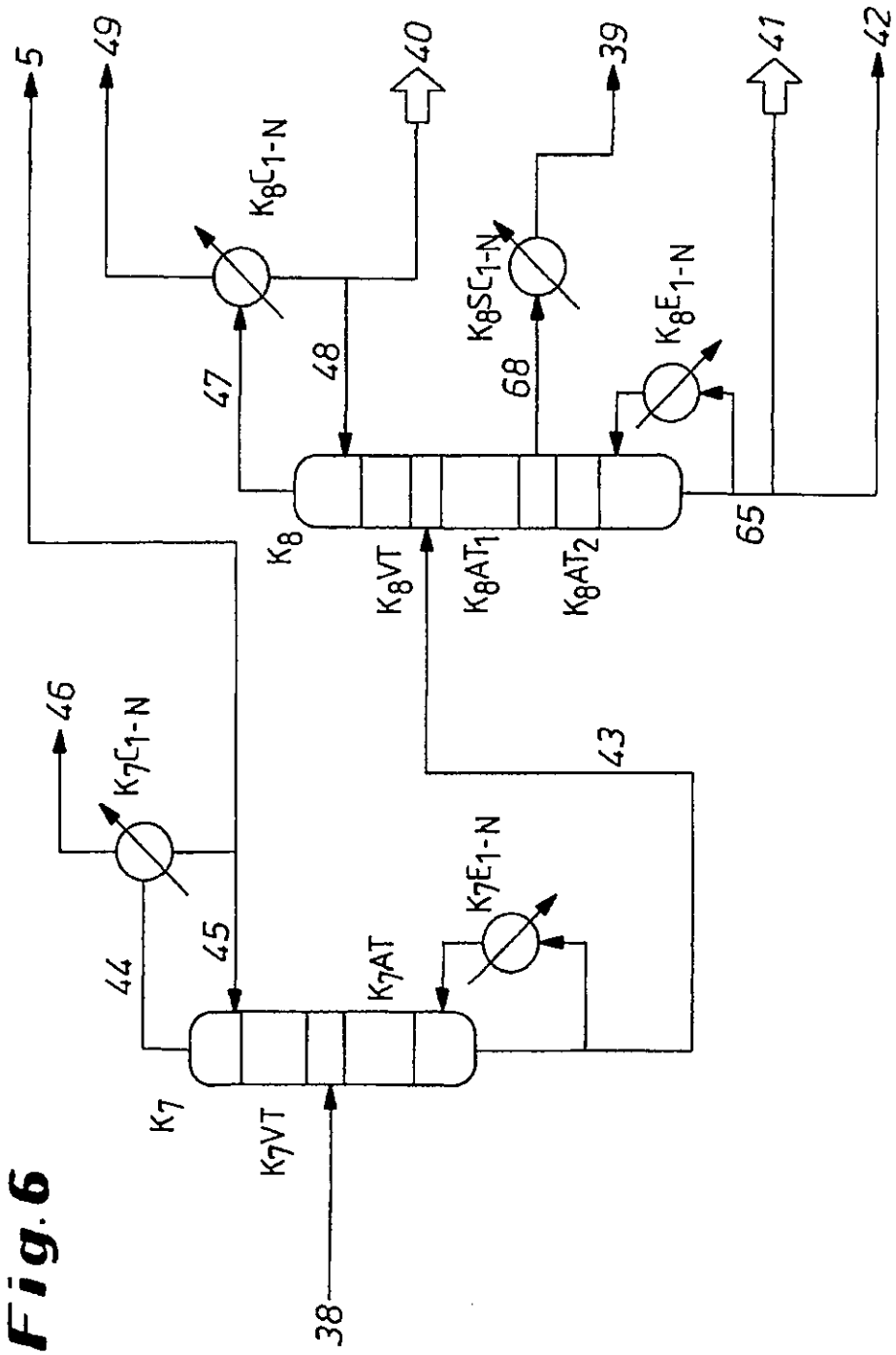
5
49
40
39
41
42
K_8C_{1-N}
K_8SC_{1-N}
K_8E_{1-N}
47
48
68
65
K_8
K_8VT
K_8AT_1
K_8AT_2
46
K_7C_{1-N}
43
K_7E_{1-N}
44
45
K_7AT
K_7
K_7VT
38

Fig.6

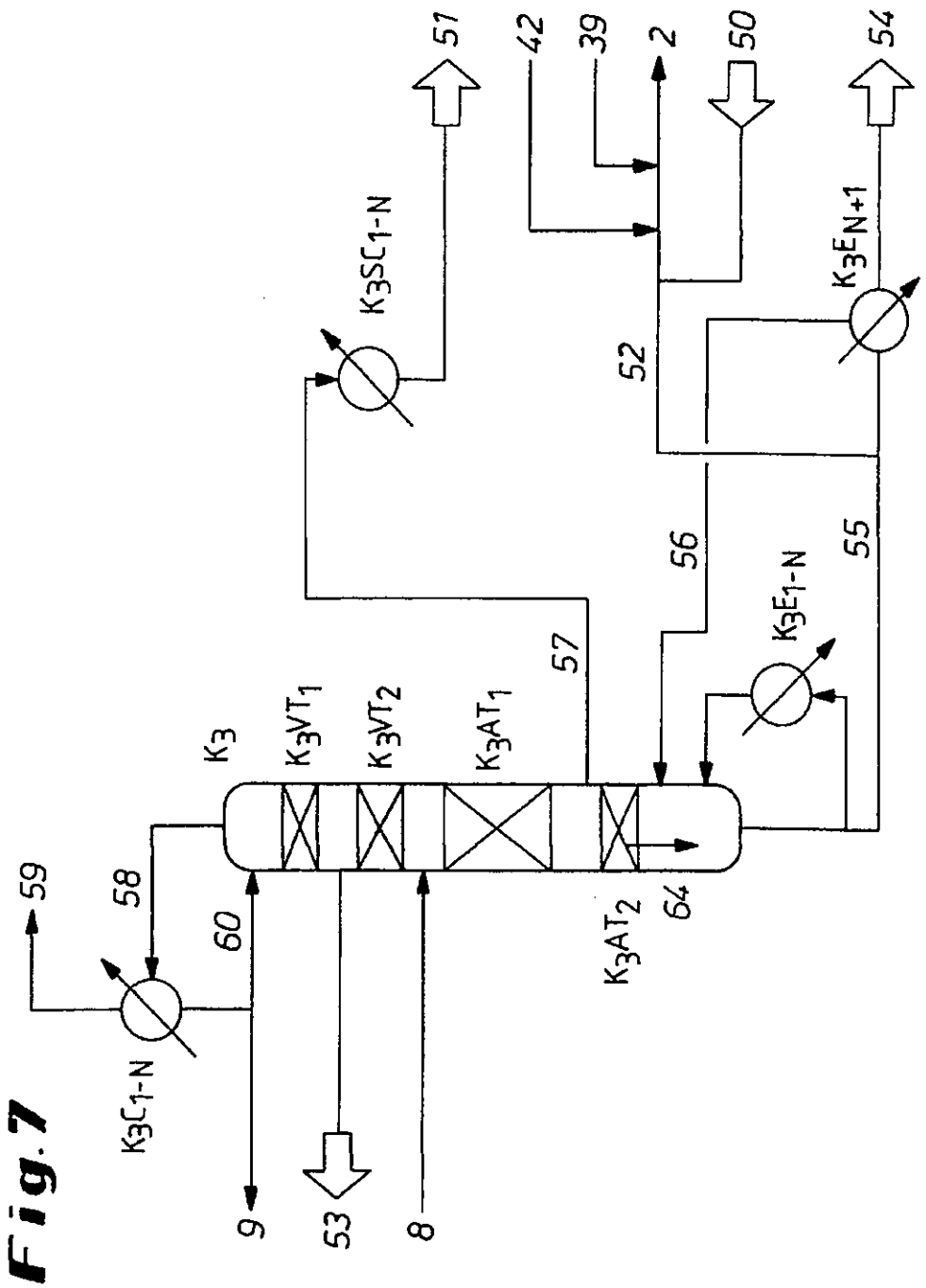
59
58
60
9
53
8
K3C1-N
K3
K3VT1
K3VT2
K3AT1
K3AT2
64
57
K3SC1-N
51
42
39
2
50
52
56
55
K3E1-N
K3EN+1
54

Fig.7

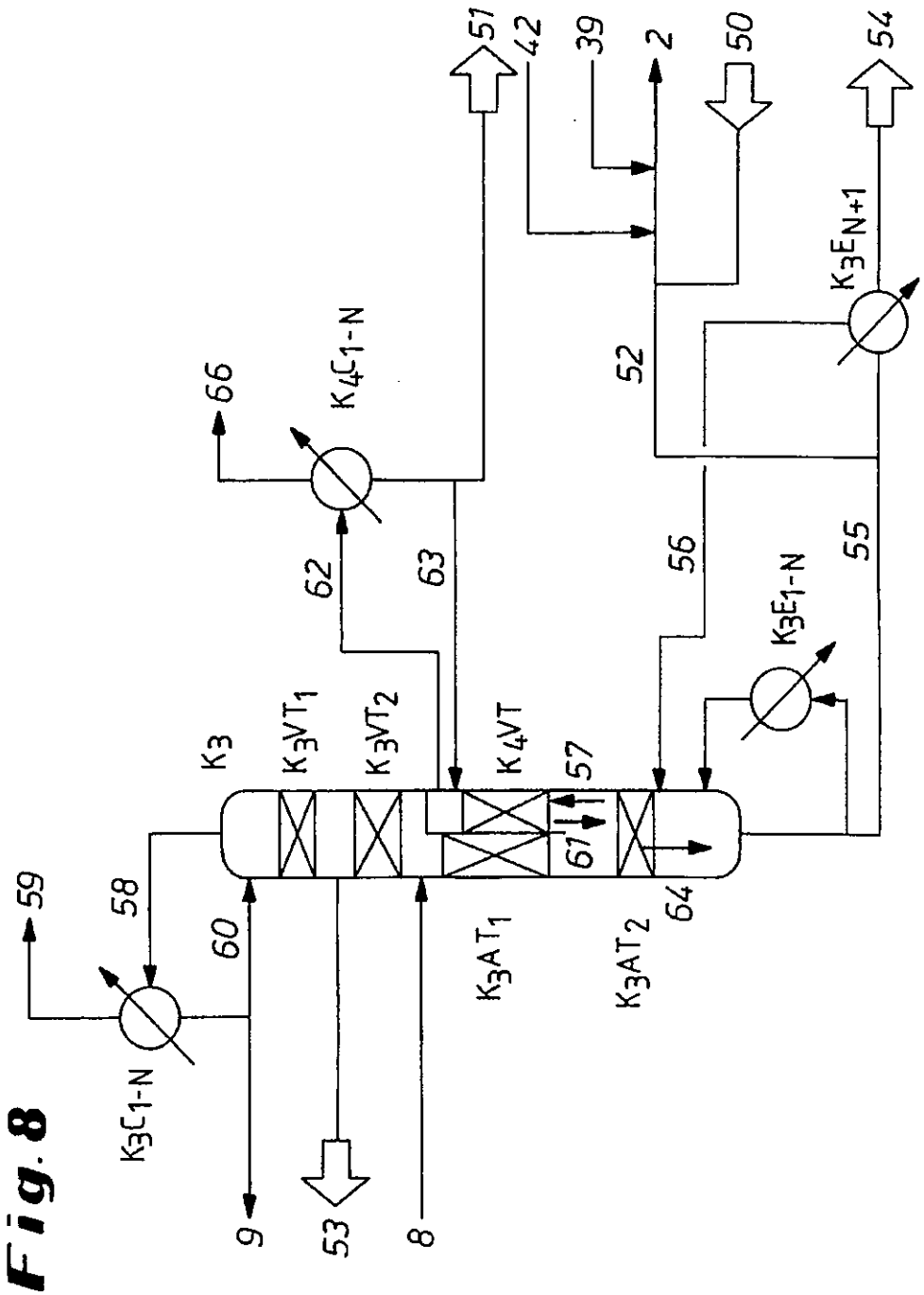
51
42
39
2
50
54
K_3E_{N+1}
52
66
K_4C_{1-N}
62
63
56
55
K_3E_{1-N}
K_3
K_3VT_1
K_3VT_2
K_4VT
57
61
64
59
58
60
K_3C_{1-N}
K_3AT_1
K_3AT_2
9
53
8

Fig. 8

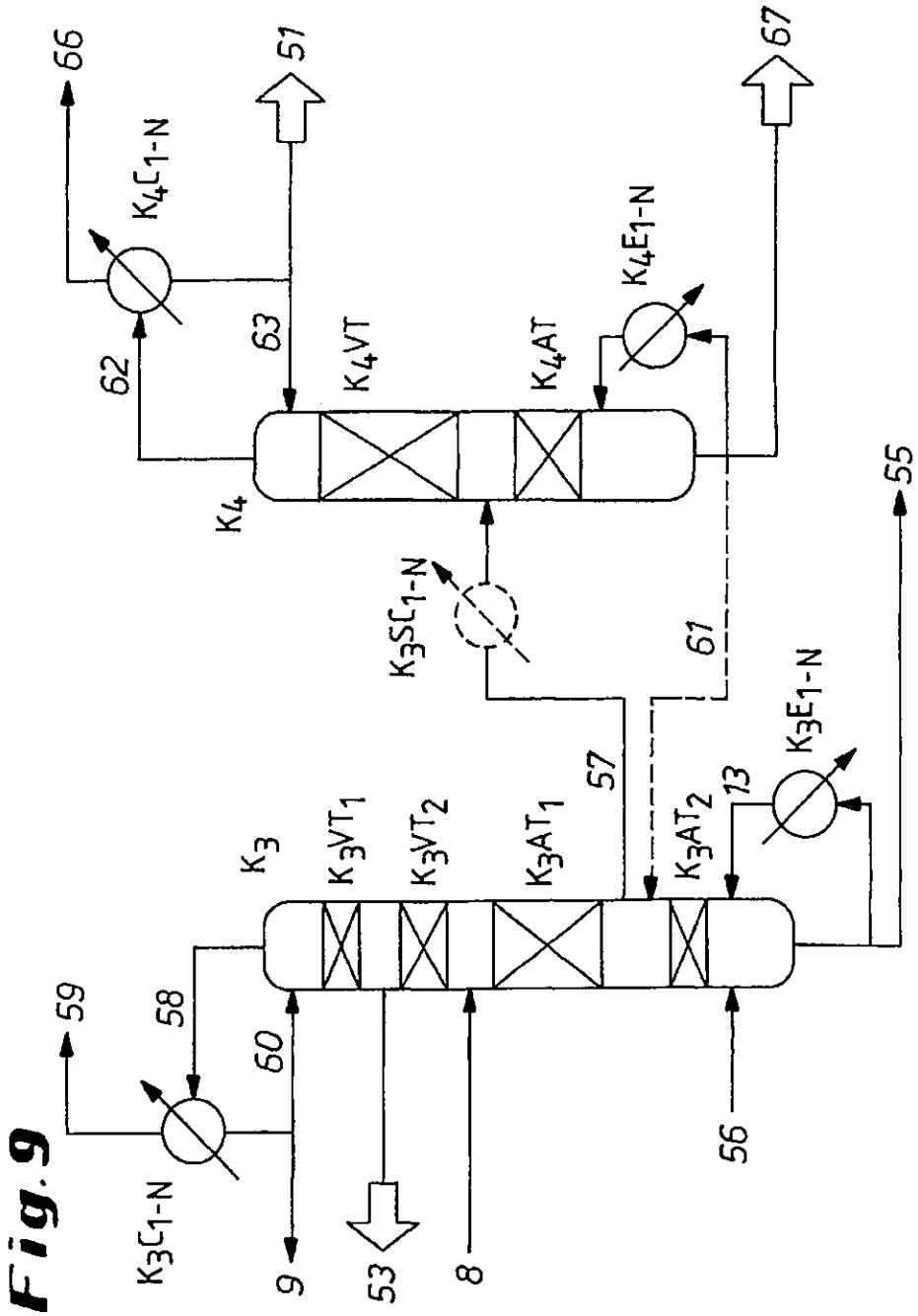
66
K_4C_{1-N}
51
67
K_4E_{1-N}
62
63
K_4VT
K_4AT
K_4
55
K_3SC_{1-N}
61
K_3E_{1-N}
57
13
K_3
K_3VT_1
K_3VT_2
K_3AT_1
K_3AT_2
59
58
60
56
K_3C_{1-N}
9
53
8

Fig.9

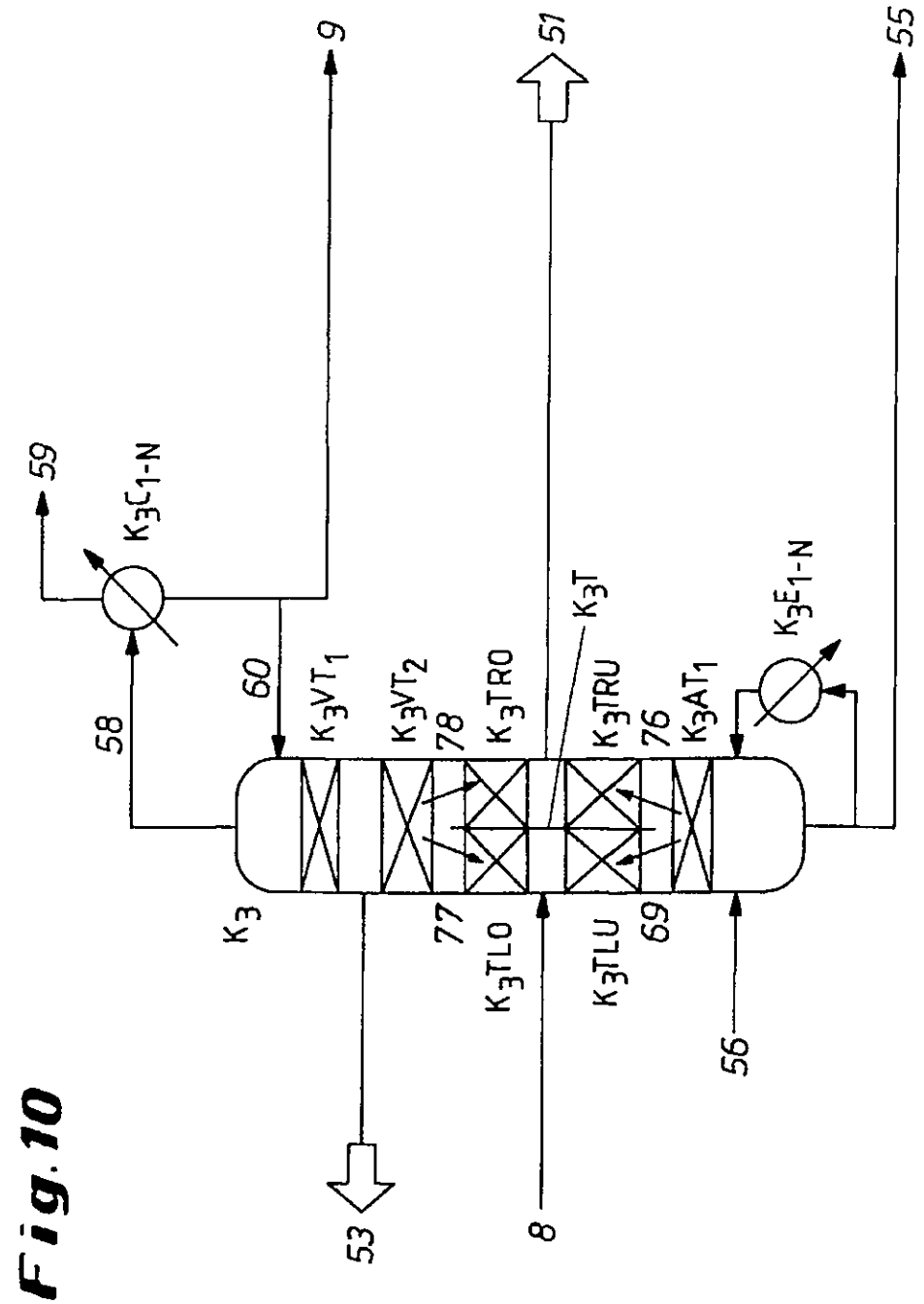
9
51
55
59
K_3C_{1-N}
58
60
K_3VT_1
K_3VT_2
78
K_3TRO
K_3T
K_3TRU
76
K_3AT_1
K_3E_{1-N}
K_3
77
K_3TLO
K_3TLU
69
56
53
8

Fig.10

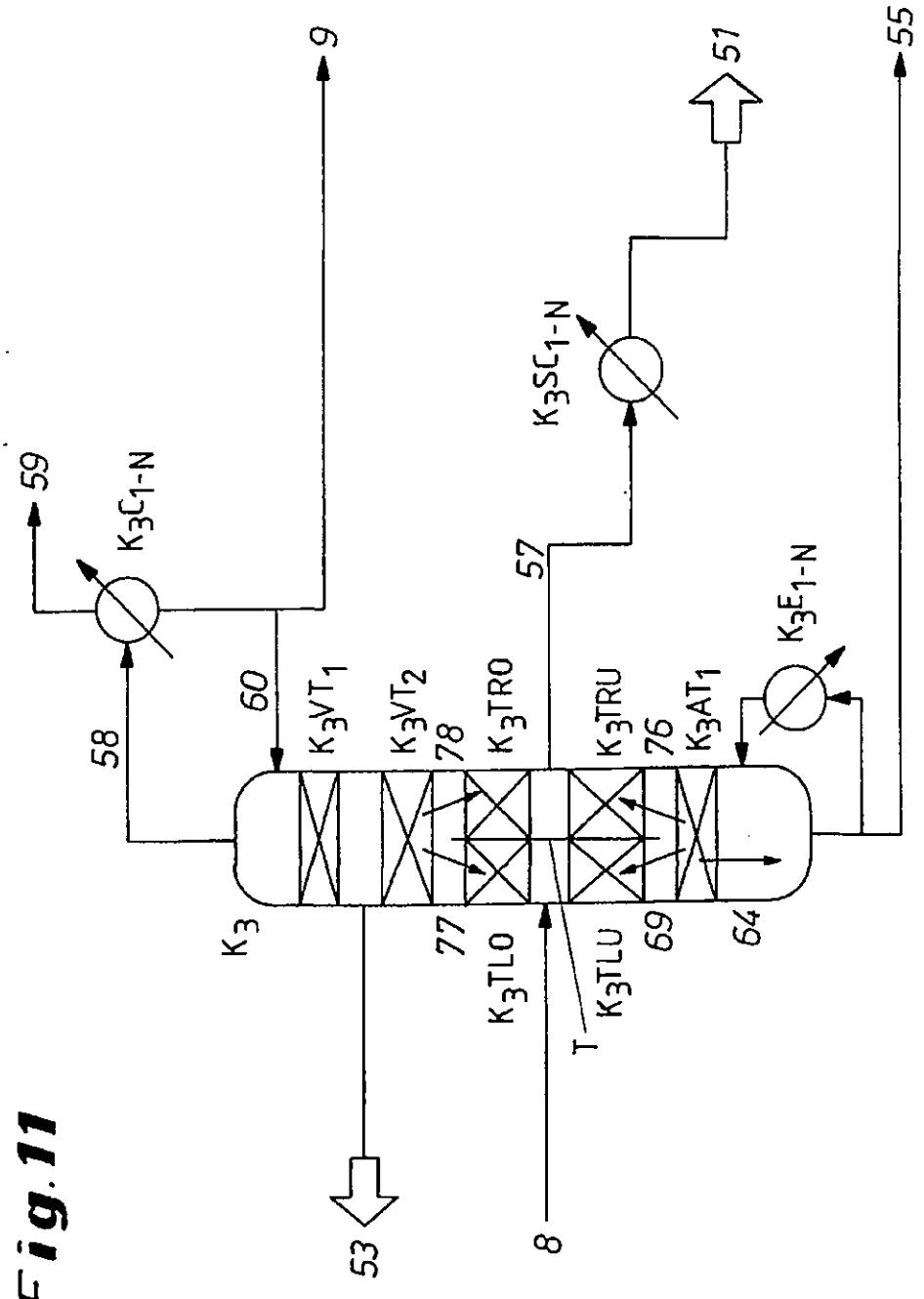
9
59
K_3C_{1-N}
58
60
K_3VT_1
K_3VT_2
78
K_3TRO
57
K_3SC_{1-N}
51
55
K_3TRU
76
K_3AT_1
K_3E_{1-N}
K_3
77
K_3TLO
T
K_3TLU
69
64
53
8

Fig.11

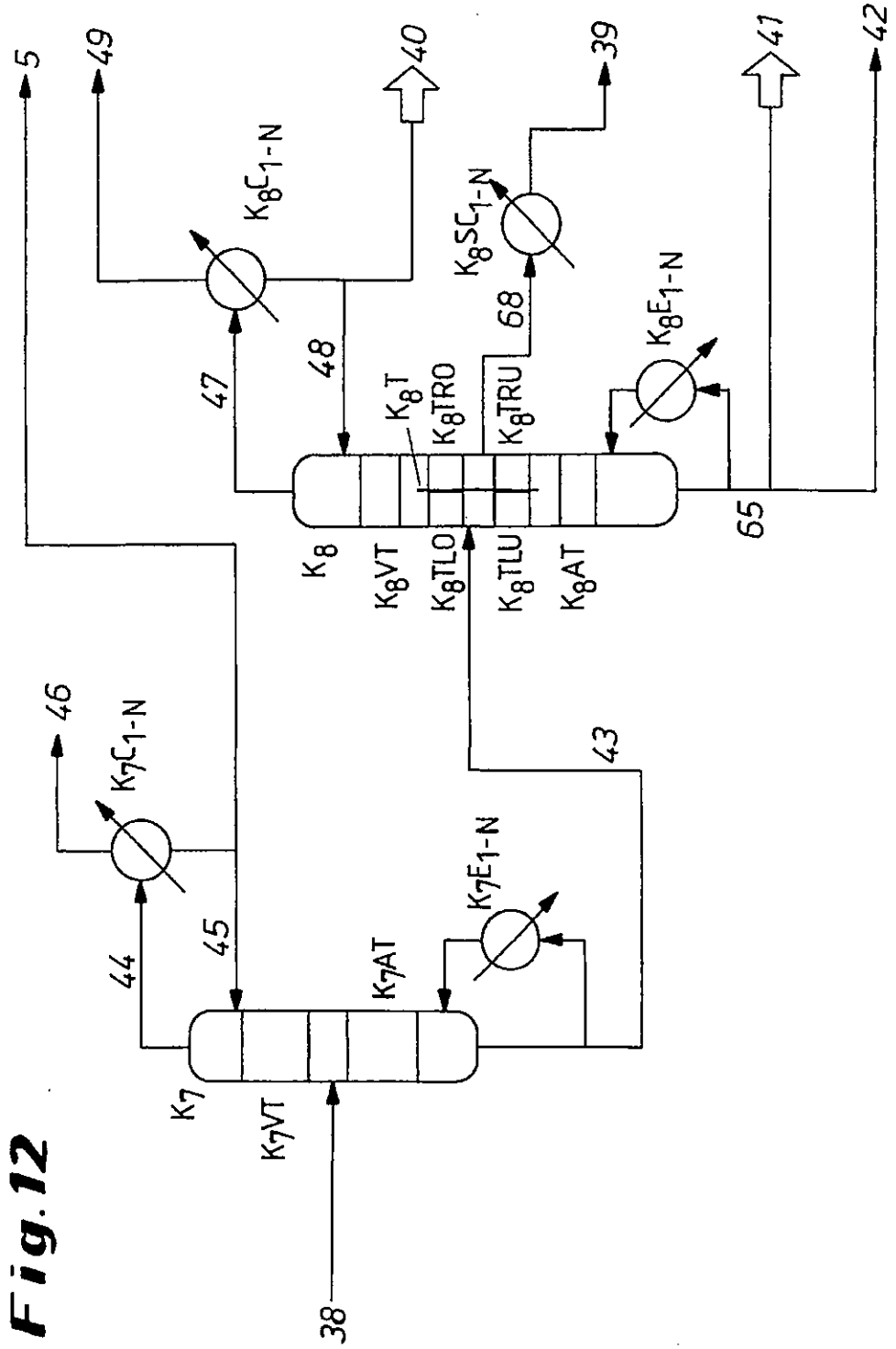
5
49
40
39
41
42
K_8C_{1-N}
K_8SC_{1-N}
K_8E_{1-N}
47
48
68
65
K_8T
K_8TRO
K_8TRU
K_8
K_8VT
K_8TLO
K_8TLU
K_8AT
46
K_7C_{1-N}
43
K_7E_{1-N}
44
45
K_7AT
K_7
K_7VT
38

Fig.12

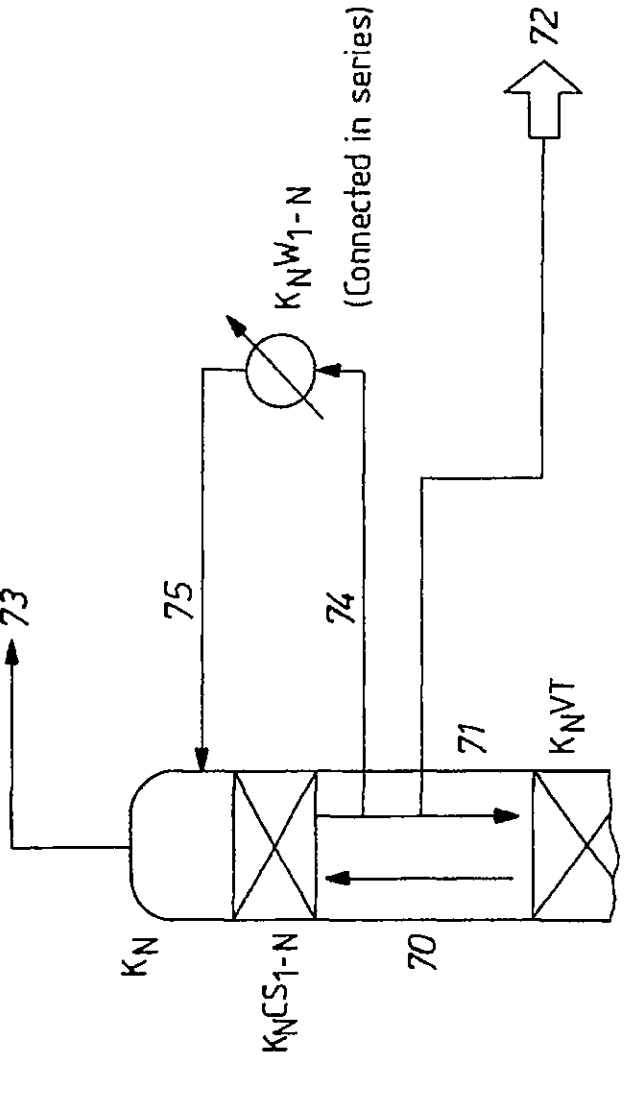

Fig.13

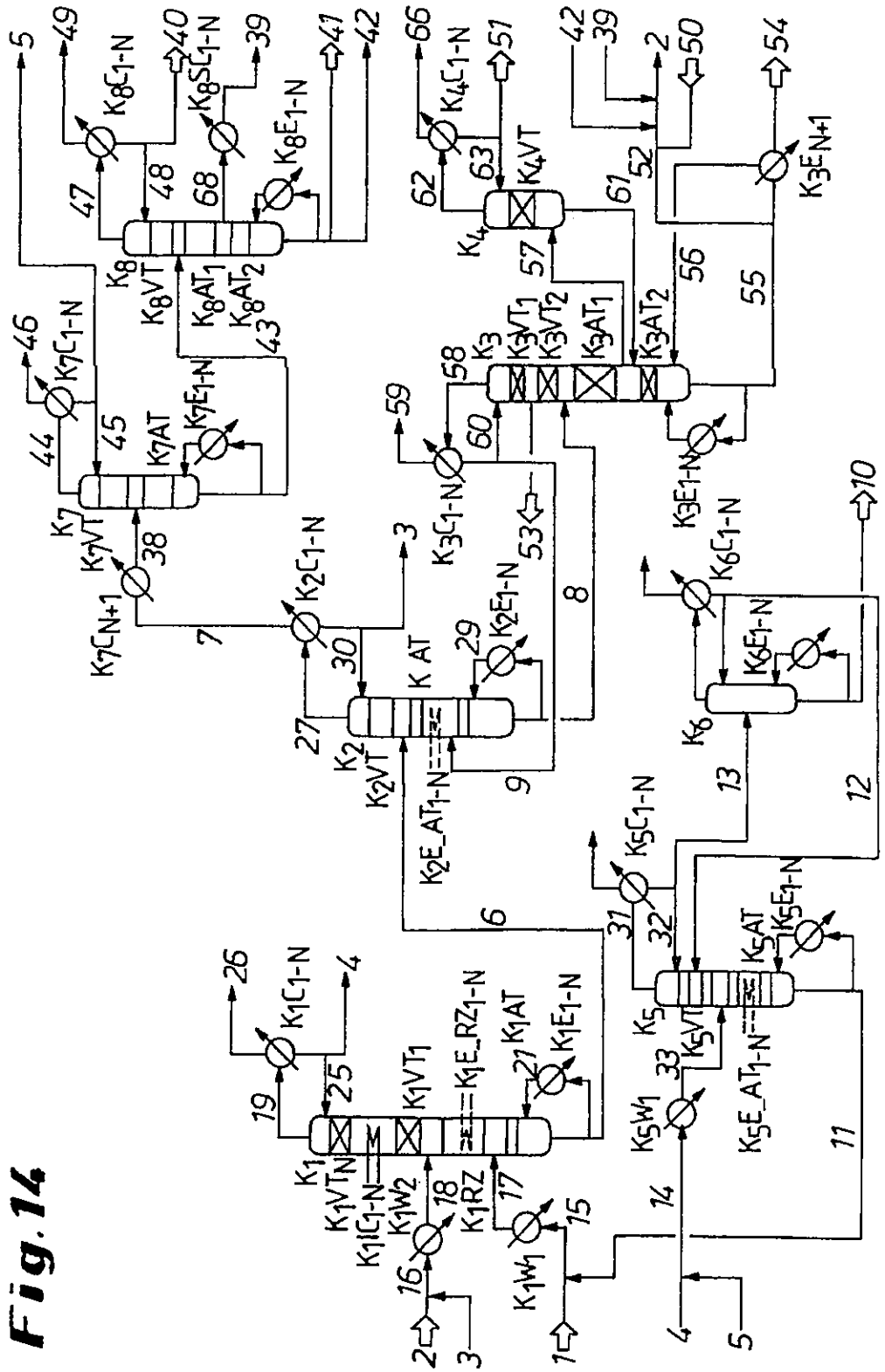
K1
K1VT1
K1VTN
K1E_RZ1-N
K1AT
K1E1-N
K1C1-N
K1W2
K1RZ
K1W1
K2
K2VT
K2E_AT1-N
K AT
K2E1-N
K2C1-N
K3
K3VT1
K3VT2
K3AT1
K3AT2
K3C1-N
K3E1-N
K3EN+1
K4
K4VT
K4C1-N
K5
K5VT
K5E_AT1-N
K5AT
K5E1-N
K5C1-N
K5W1
K6
K6E1-N
K6C1-N
K7
K7VT
K7C1-N+1
K7AT
K7E1-N
K7C1-N
K8
K8VT
K8AT1
K8AT2
K8E1-N
K8SC1-N
K8C1-N

Fig.14