FIG. 1

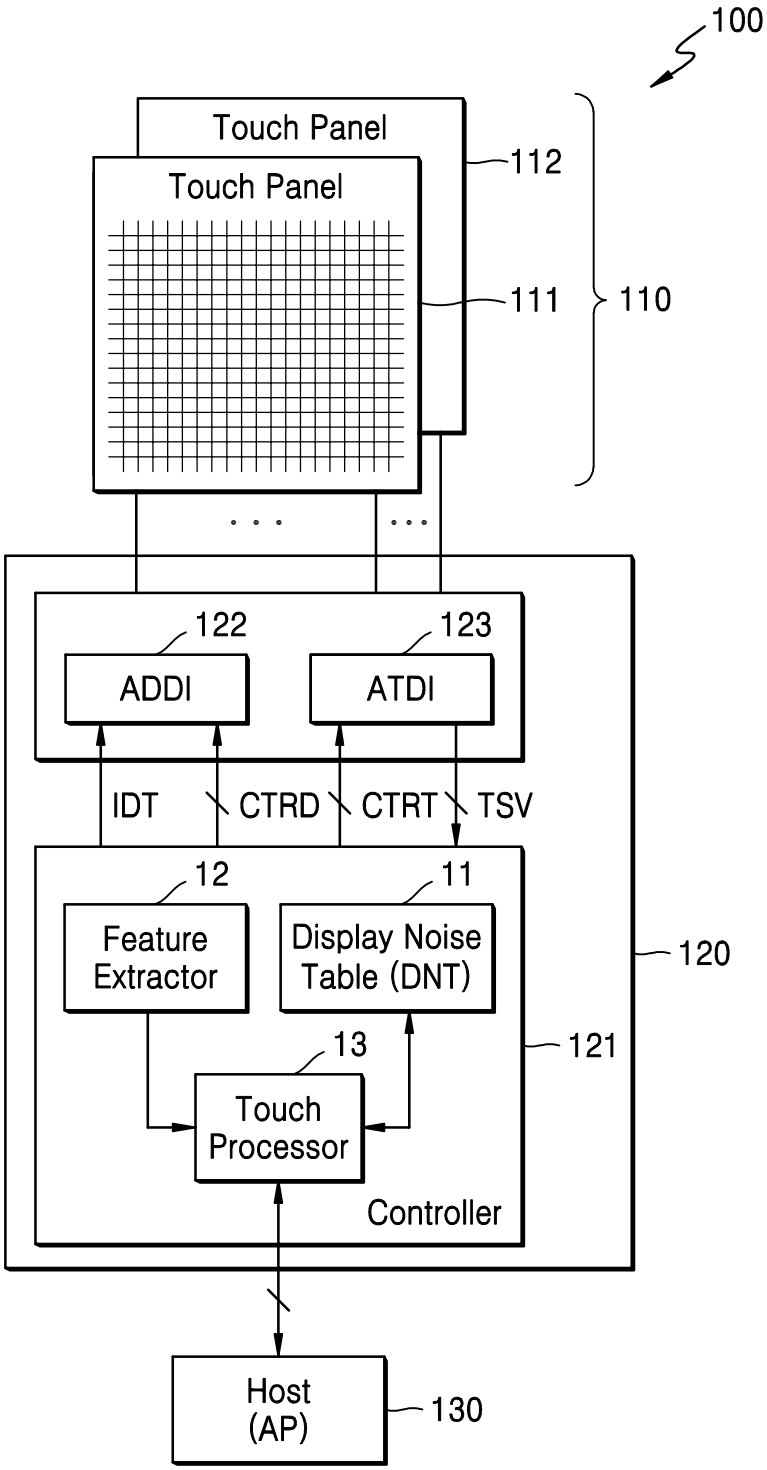
100
Touch Panel
Touch Panel
112
111
110
122
123
ADDI
ATDI
IDT
CTRD
CTRT
TSV
12
11
Feature Extractor
Display Noise Table (DNT)
120
13
121
Touch Processor
Controller
Host (AP)
130

FIG. 2

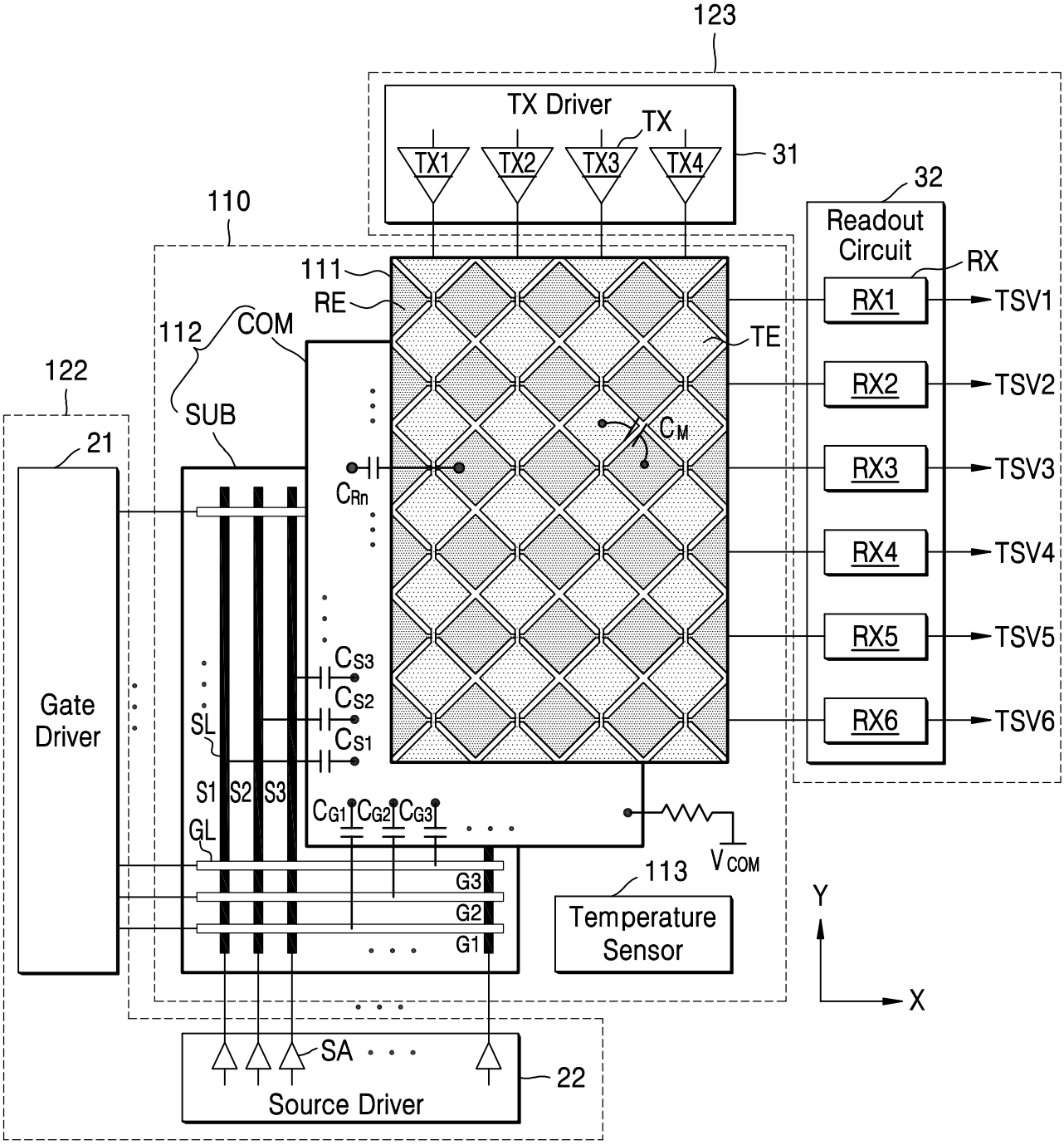
123
TX Driver
TX
TX1
TX2
TX3
TX4
31
32
Readout Circuit
RX
RX1
RX2
RX3
RX4
RX5
RX6
TSV1
TSV2
TSV3
TSV4
TSV5
TSV6
110
111
RE
112
COM
TE
122
SUB
21
CM
CRn
CS3
CS2
CS1
Gate Driver
SL
S1
S2
S3
CG1
CG2
CG3
GL
G3
G2
G1
VCOM
113
Temperature Sensor
Y
X
SA
22
Source Driver

FIG. 3A

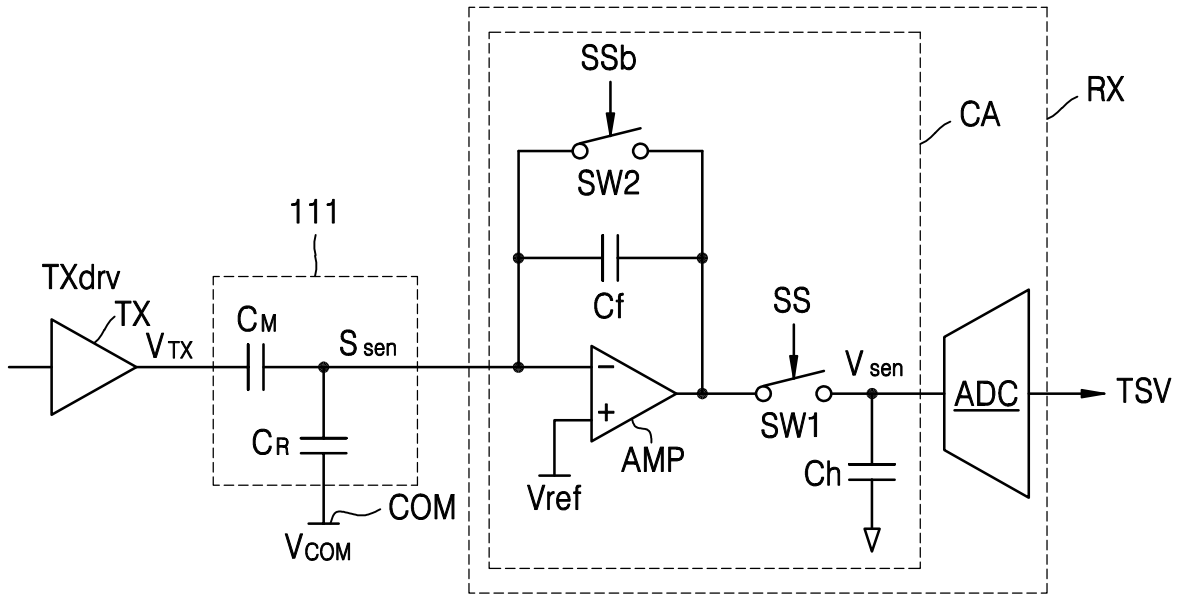
SSb
SW2
CA
RX
111
TXdrv
TX
VTX
CM
S sen
Cf
SS
V sen
ADC
TSV
SW1
CR
AMP
Ch
Vref
COM
VCOM

FIG. 3B

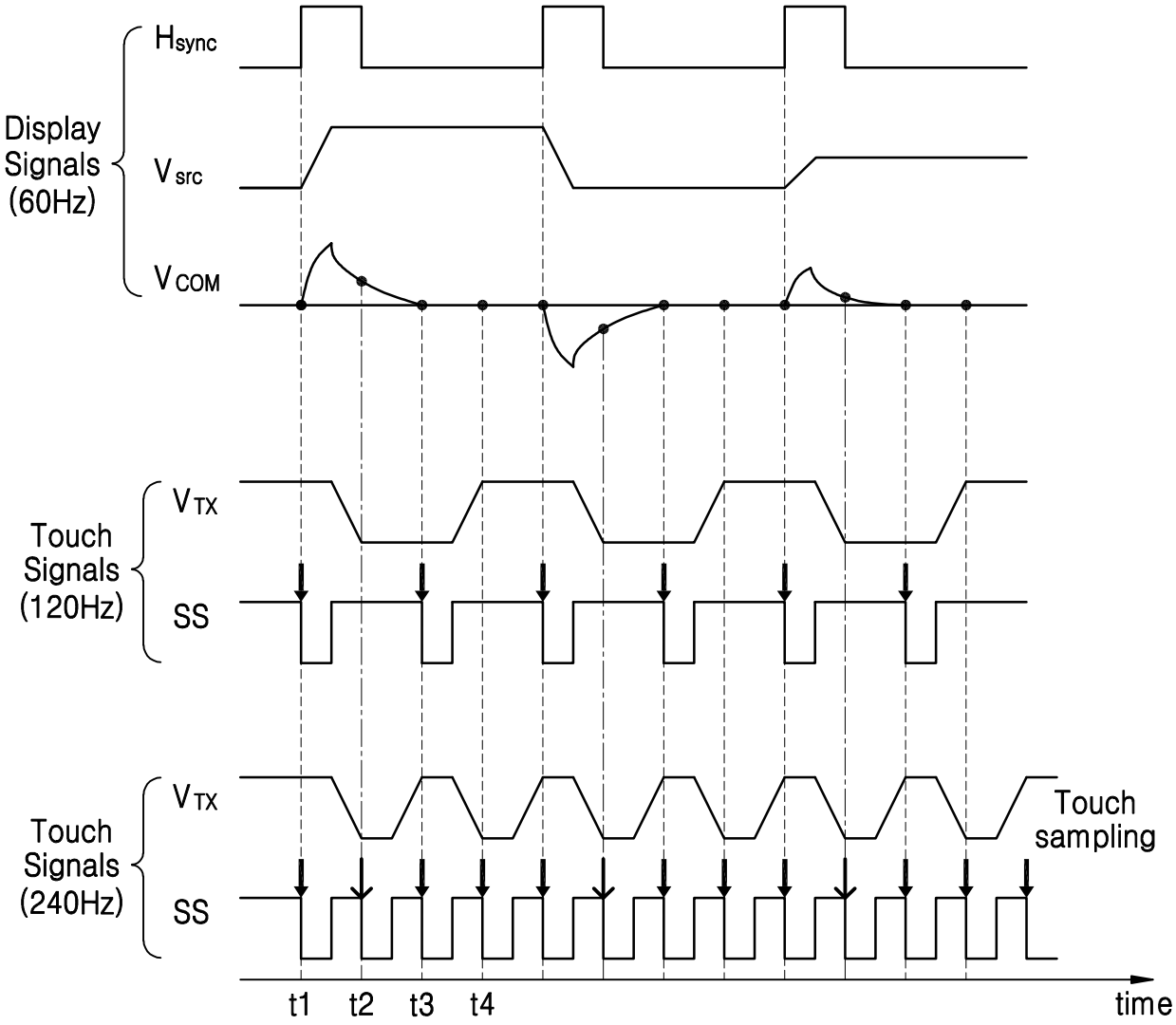
Hsync
Display Signals (60Hz)
Vsrc
VCOM
VTX
Touch Signals (120Hz)
SS
VTX
Touch Signals (240Hz)
SS
Touch sampling
t1
t2
t3
t4
time

FIG. 4

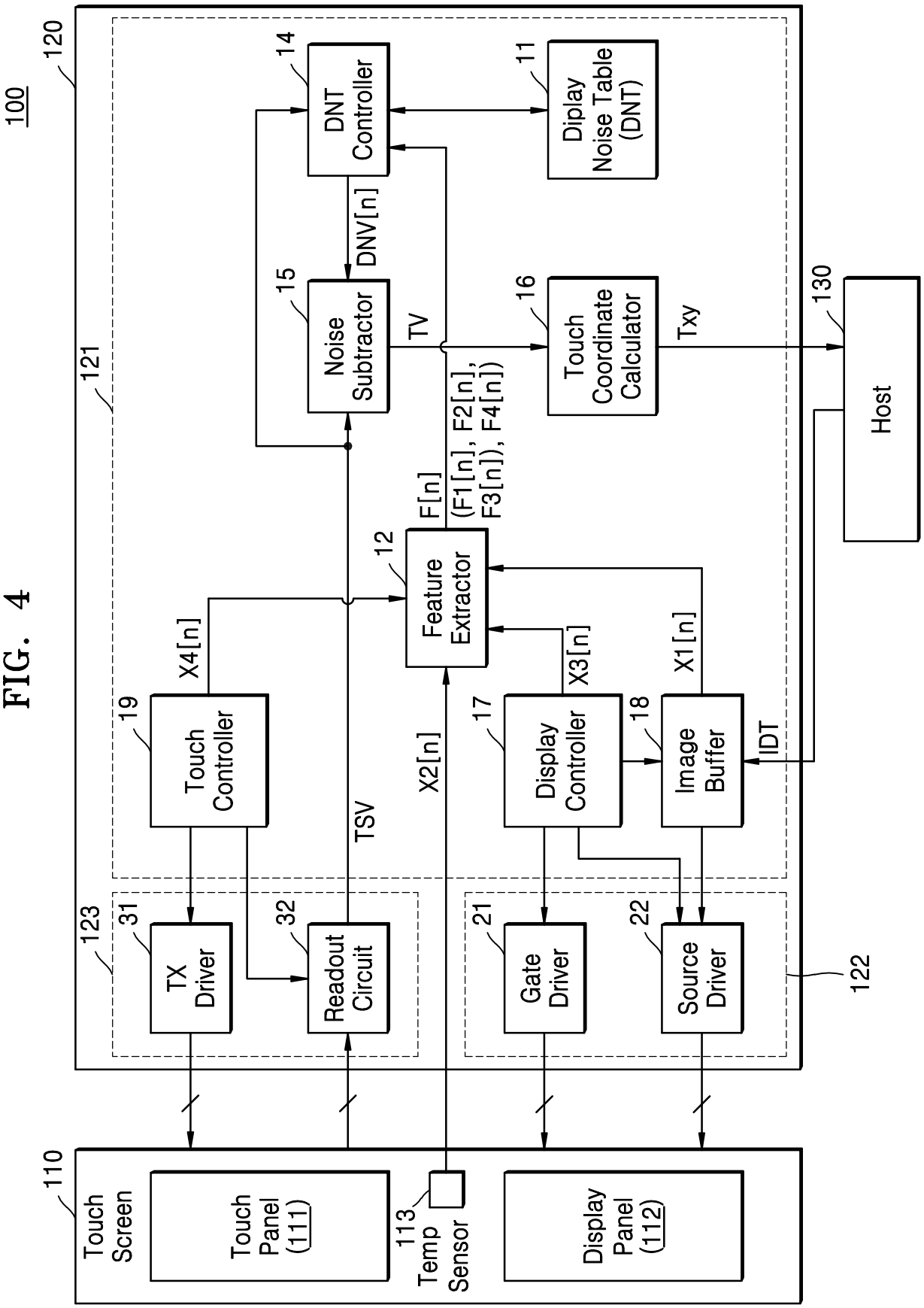
100
120
121
122
123
110
14
DNT Controller
11
Diplay Noise Table (DNT)
DNV[n]
15
Noise Subtractor
TV
16
Touch Coordinate Calculator
Txy
130
Host
F[n]
(F1[n], F2[n], F3[n]), F4[n])
12
Feature Extractor
X4[n]
19
Touch Controller
X3[n]
X1[n]
17
Display Controller
18
Image Buffer
IDT
X2[n]
TSV
31
TX Driver
32
Readout Circuit
21
Gate Driver
22
Source Driver
Touch Screen
Touch Panel (111)
113
Temp Sensor
Display Panel (112)

FIG. 5A

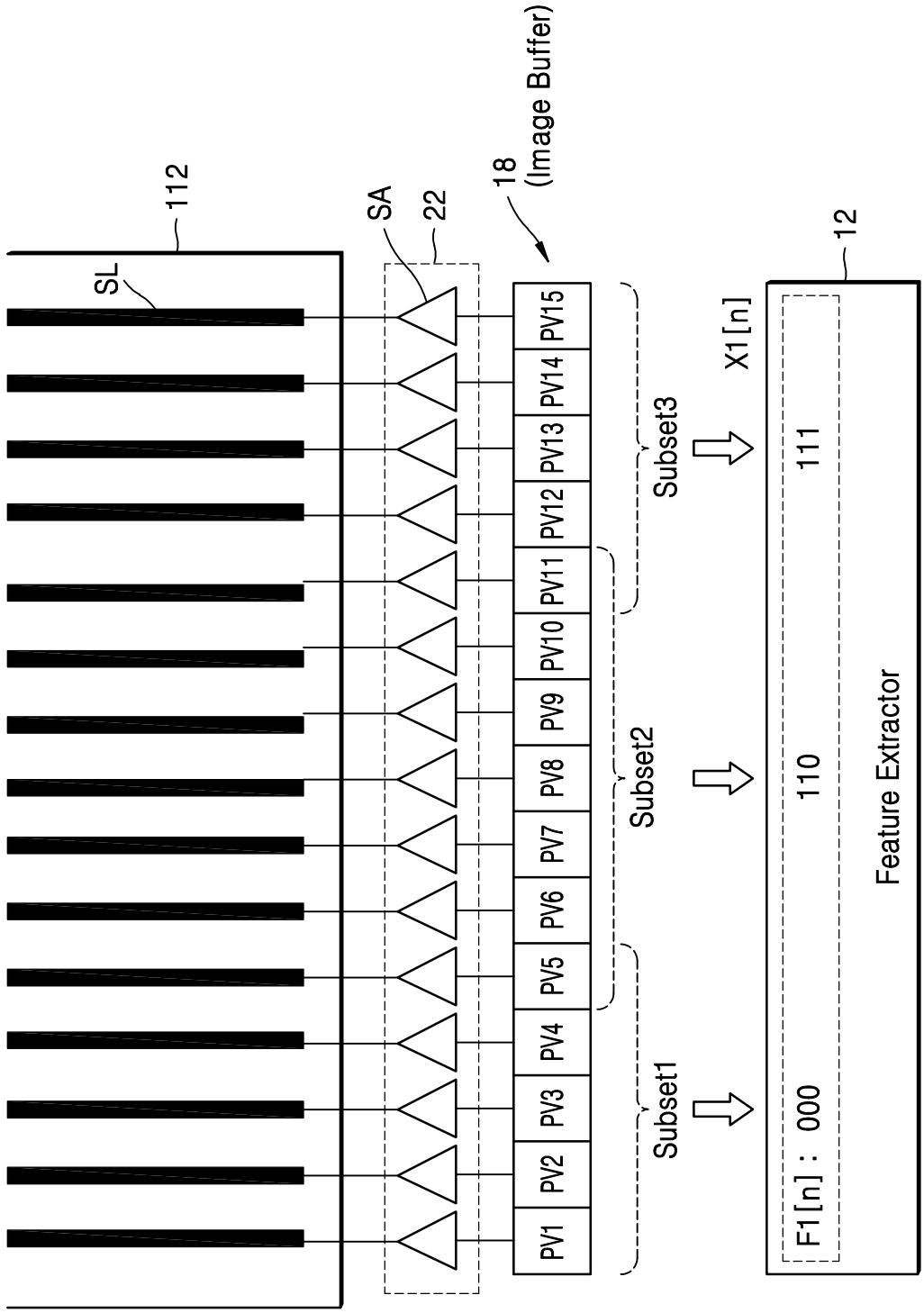
112
SL
SA
22
18
(Image Buffer)
PV1
PV2
PV3
PV4
PV5
PV6
PV7
PV8
PV9
PV10
PV11
PV12
PV13
PV14
PV15
Subset1
Subset2
Subset3
X1[n]
12
F1[n] : 000
110
111
Feature Extractor

FIG. 5B

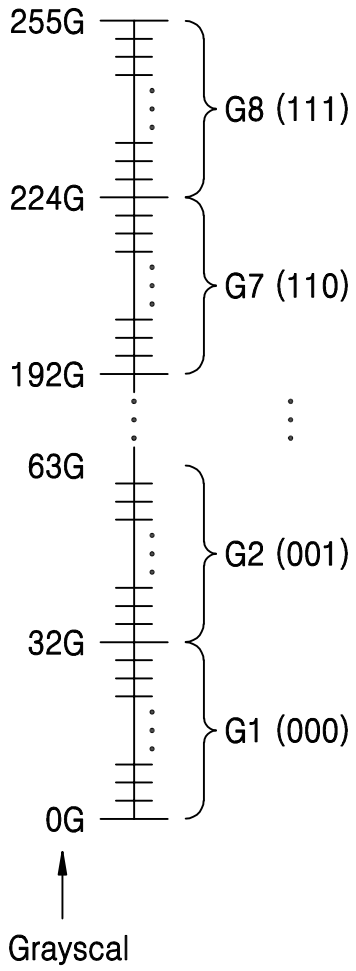

FIG. 6A

11a

Display Noise Table

F[n]	DNV
000 000 000	4
000 000 001	5
⋮	⋮
000 001 000	16
000 001 001	20
000 001 010	22
⋮	⋮
000 111 111	27
001 000 001	28
⋮	⋮
111 111 111	40

FIG. 6B

11b

Display Noise Table

F2[n]	F1[n]	DNV
00 (High Temp.)	000 000 000	4
	000 000 001	5
	⋮	⋮
	111 111 111	10
01 (Room Temp.)	000 000 000	15
	000 000 001	16
	⋮	⋮
	111 111 111	40
10 (Low Temp.)	000 000 000	50
	000 000 001	⋮
	⋮	78
	111 111 111	79

FIG. 6C

11c

Display Noise Table

F[n]	DNV
0000	4
0010	5
0100	16
0110	20
⋮	⋮
1100	38
1111	40

FIG. 6D

11d

Display Noise Table

F[n]	DNV	COFF (C2, C1)
0000	4	–
0100	5	2, 0
0110	16	3, 4
1111	20	0, 1

FIG. 6E

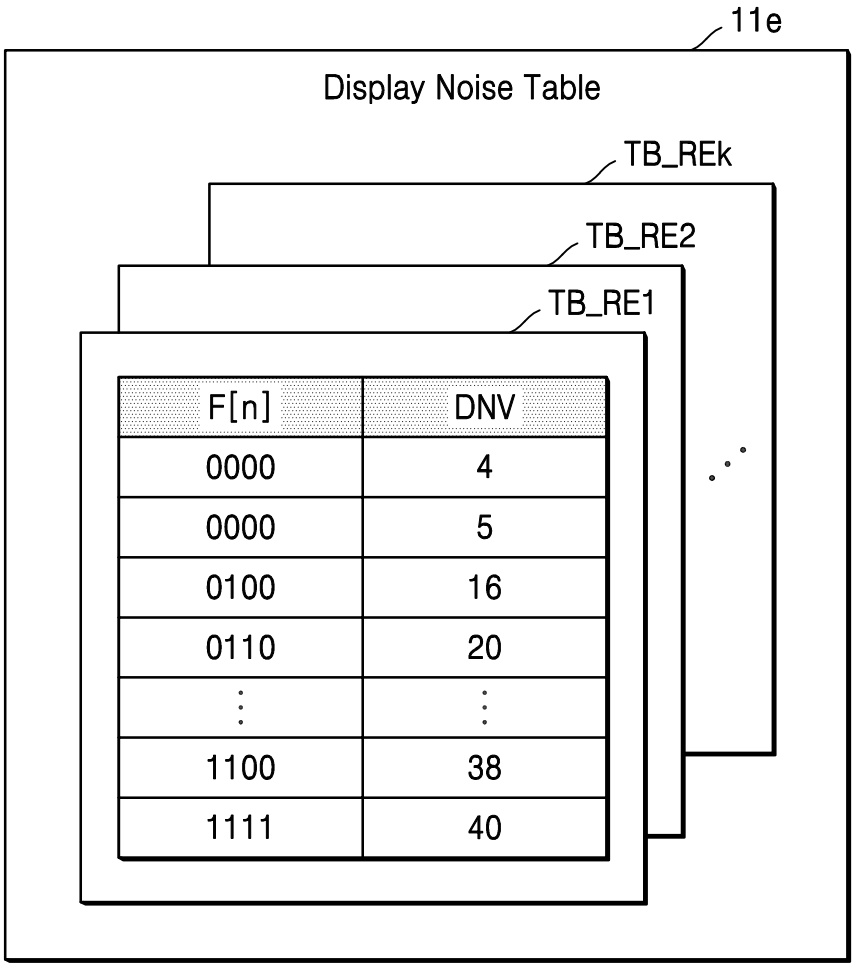
11e
Display Noise Table
TB_REk
TB_RE2
TB_RE1
F[n]
DNV
0000
4
0000
5
0100
16
0110
20
1100
38
1111
40

FIG. 7

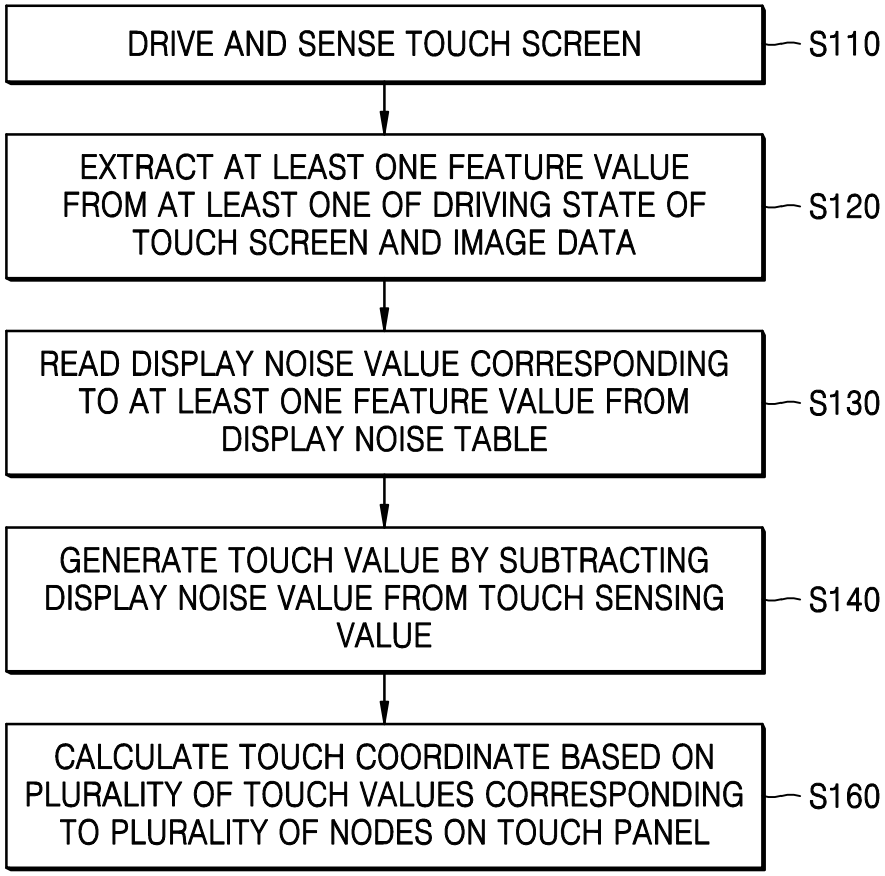
DRIVE AND SENSE TOUCH SCREEN
S110
EXTRACT AT LEAST ONE FEATURE VALUE FROM AT LEAST ONE OF DRIVING STATE OF TOUCH SCREEN AND IMAGE DATA
S120
READ DISPLAY NOISE VALUE CORRESPONDING TO AT LEAST ONE FEATURE VALUE FROM DISPLAY NOISE TABLE
S130
GENERATE TOUCH VALUE BY SUBTRACTING DISPLAY NOISE VALUE FROM TOUCH SENSING VALUE
S140
CALCULATE TOUCH COORDINATE BASED ON PLURALITY OF TOUCH VALUES CORRESPONDING TO PLURALITY OF NODES ON TOUCH PANEL
S160

FIG. 8A

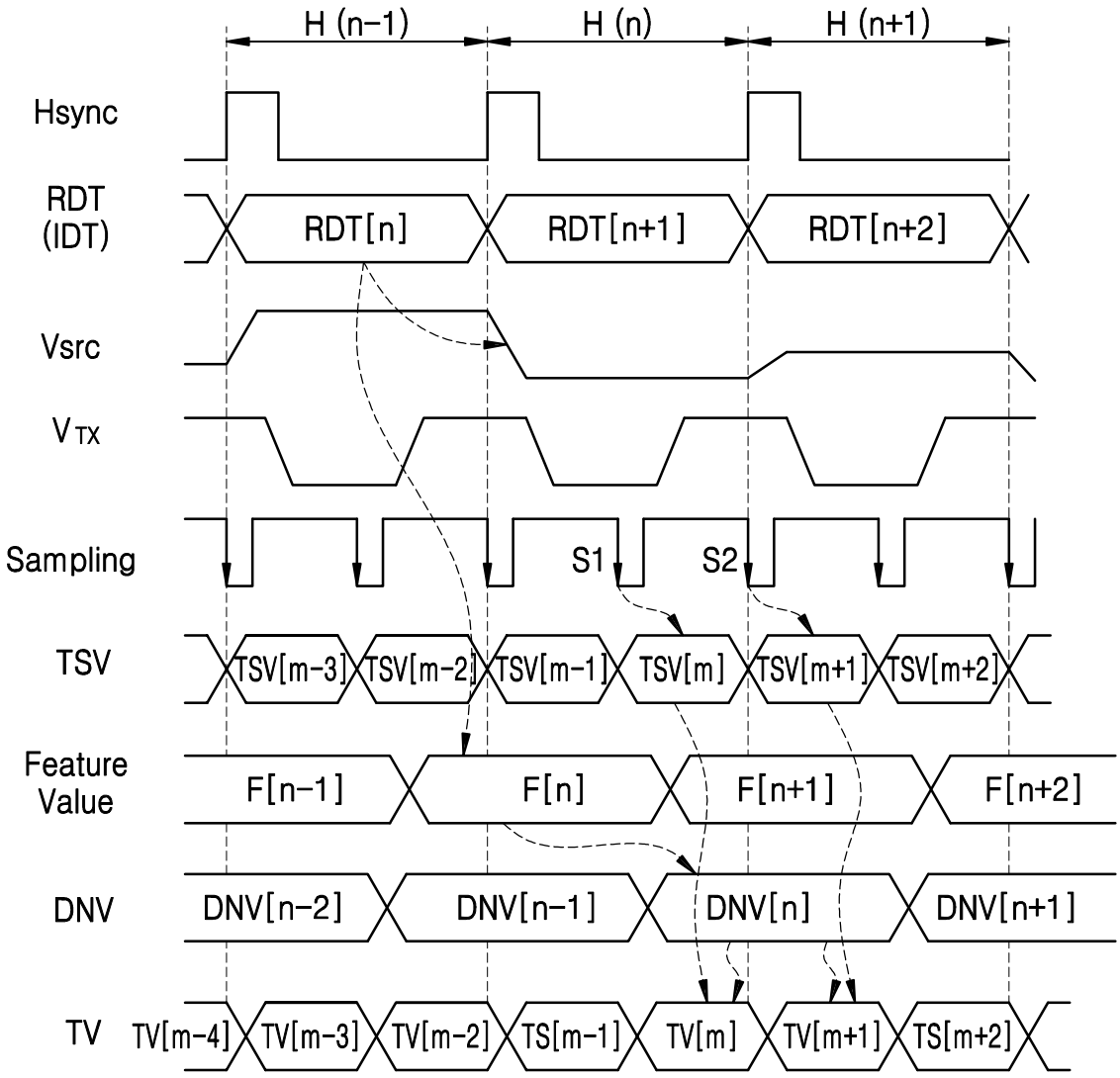
H (n-1)
H (n)
H (n+1)
Hsync
RDT
(IDT)
RDT[n]
RDT[n+1]
RDT[n+2]
Vsrc
V TX
Sampling
S1
S2
TSV
TSV[m-3]
TSV[m-2]
TSV[m-1]
TSV[m]
TSV[m+1]
TSV[m+2]
Feature
Value
F[n-1]
F[n]
F[n+1]
F[n+2]
DNV
DNV[n-2]
DNV[n-1]
DNV[n]
DNV[n+1]
TV
TV[m-4]
TV[m-3]
TV[m-2]
TS[m-1]
TV[m]
TV[m+1]
TS[m+2]

FIG. 8B

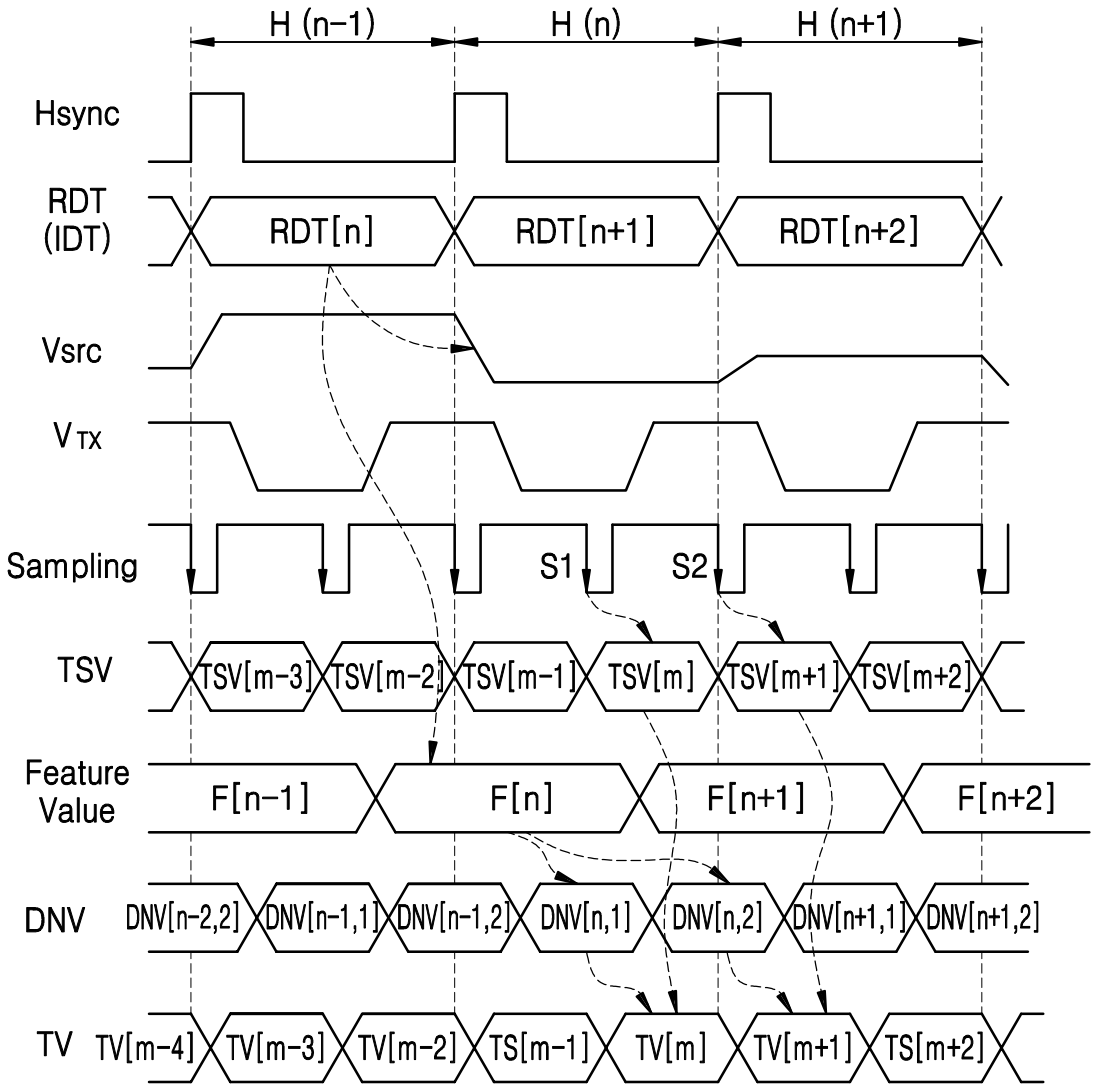
H (n-1)
H (n)
H (n+1)
Hsync
RDT
(IDT)
RDT[n]
RDT[n+1]
RDT[n+2]
Vsrc
VTX
Sampling
S1
S2
TSV
TSV[m-3]
TSV[m-2]
TSV[m-1]
TSV[m]
TSV[m+1]
TSV[m+2]
Feature
Value
F[n-1]
F[n]
F[n+1]
F[n+2]
DNV
DNV[n-2,2]
DNV[n-1,1]
DNV[n-1,2]
DNV[n,1]
DNV[n,2]
DNV[n+1,1]
DNV[n+1,2]
TV
TV[m-4]
TV[m-3]
TV[m-2]
TS[m-1]
TV[m]
TV[m+1]
TS[m+2]

FIG. 8C

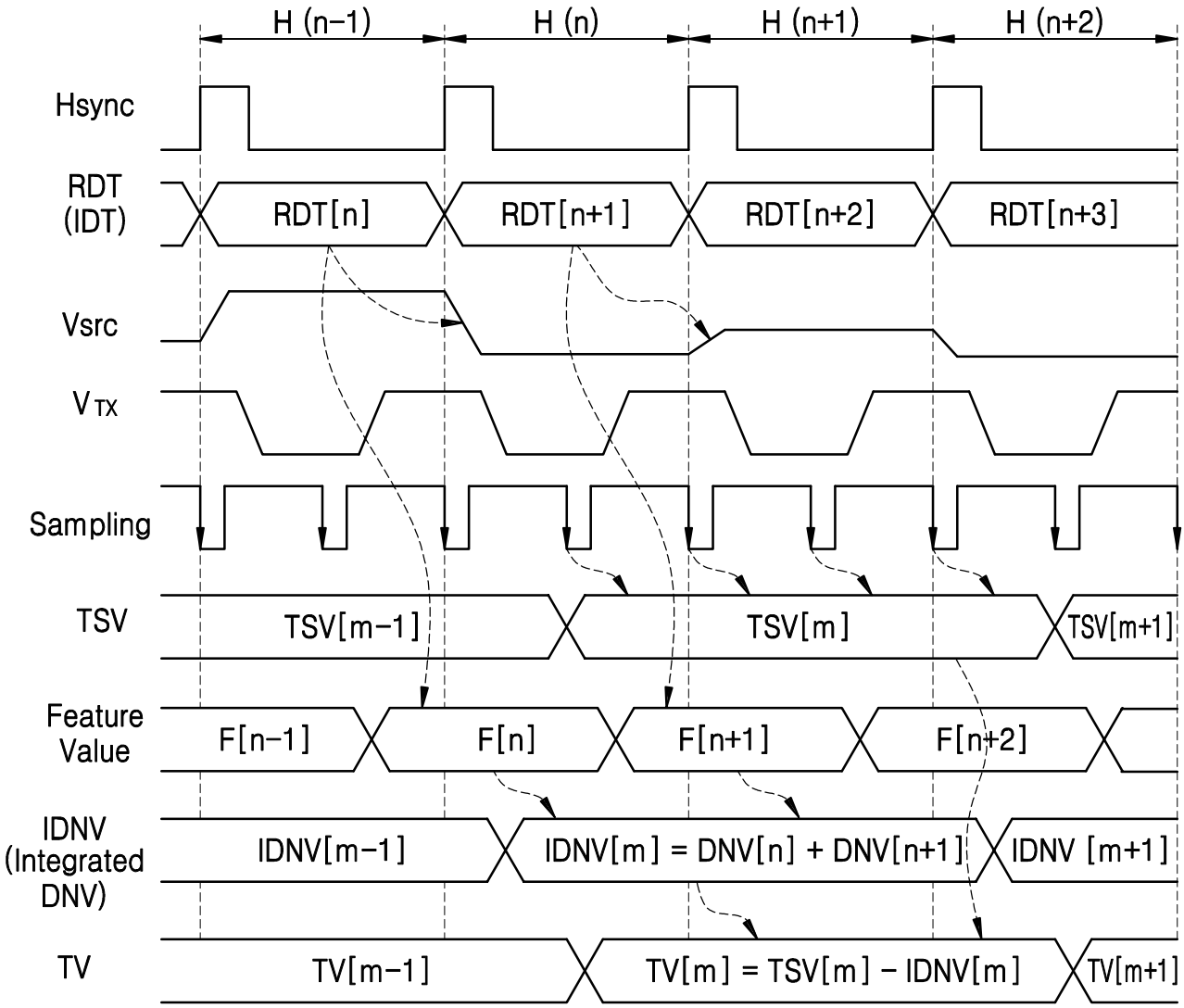
H (n−1)
H (n)
H (n+1)
H (n+2)
Hsync
RDT
(IDT)
RDT[n]
RDT[n+1]
RDT[n+2]
RDT[n+3]
Vsrc
V TX
Sampling
TSV
TSV[m−1]
TSV[m]
TSV[m+1]
Feature
Value
F[n−1]
F[n]
F[n+1]
F[n+2]
IDNV
(Integrated
DNV)
IDNV[m−1]
IDNV[m] = DNV[n] + DNV[n+1]
IDNV [m+1]
TV
TV[m−1]
TV[m] = TSV[m] − IDNV[m]
TV[m+1]

FIG. 9A

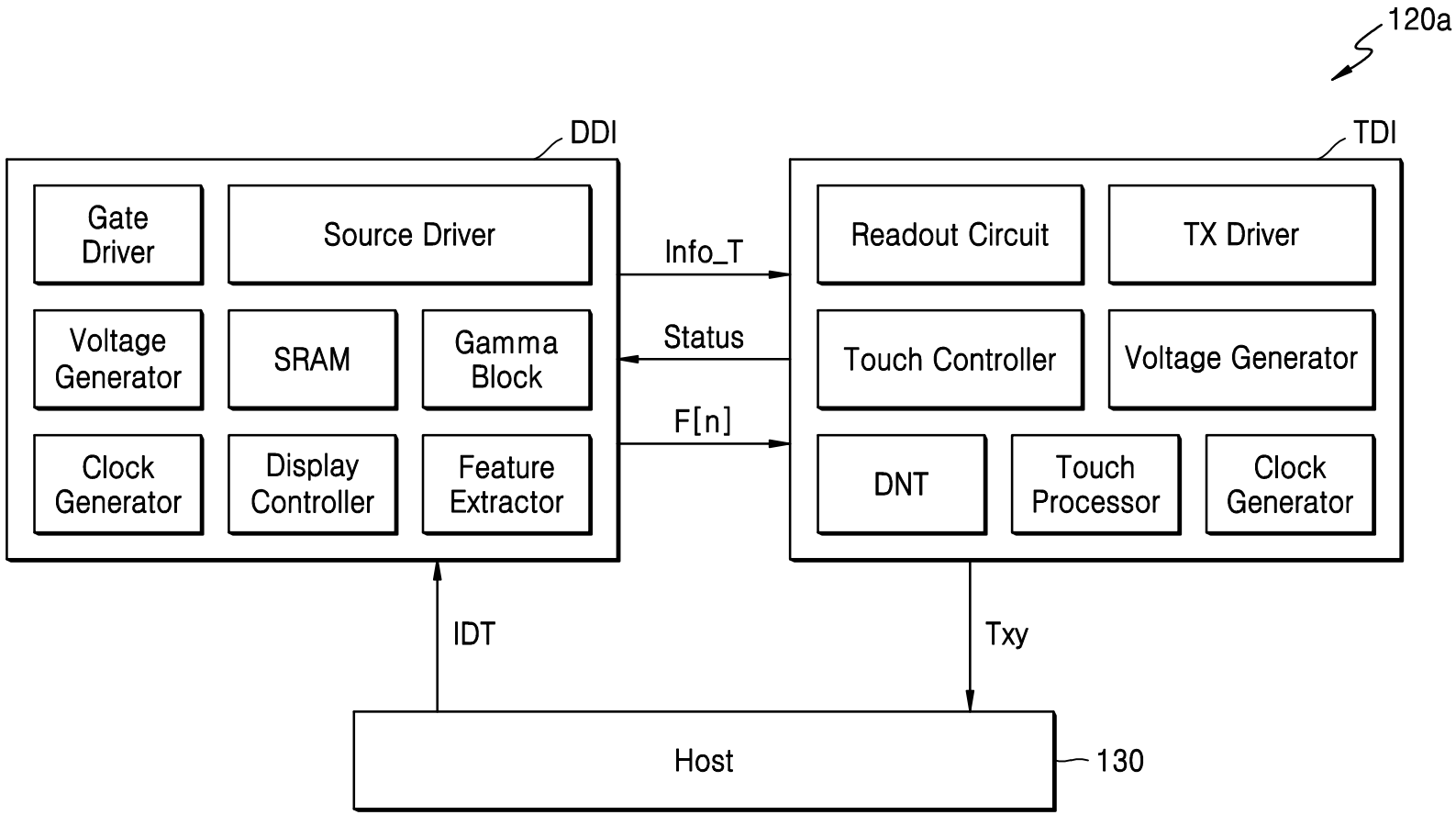
120a
DDI
TDI
Gate Driver
Source Driver
Voltage Generator
SRAM
Gamma Block
Clock Generator
Display Controller
Feature Extractor
Info_T
Status
F[n]
Readout Circuit
TX Driver
Touch Controller
Voltage Generator
DNT
Touch Processor
Clock Generator
IDT
Txy
Host
130

FIG. 9B

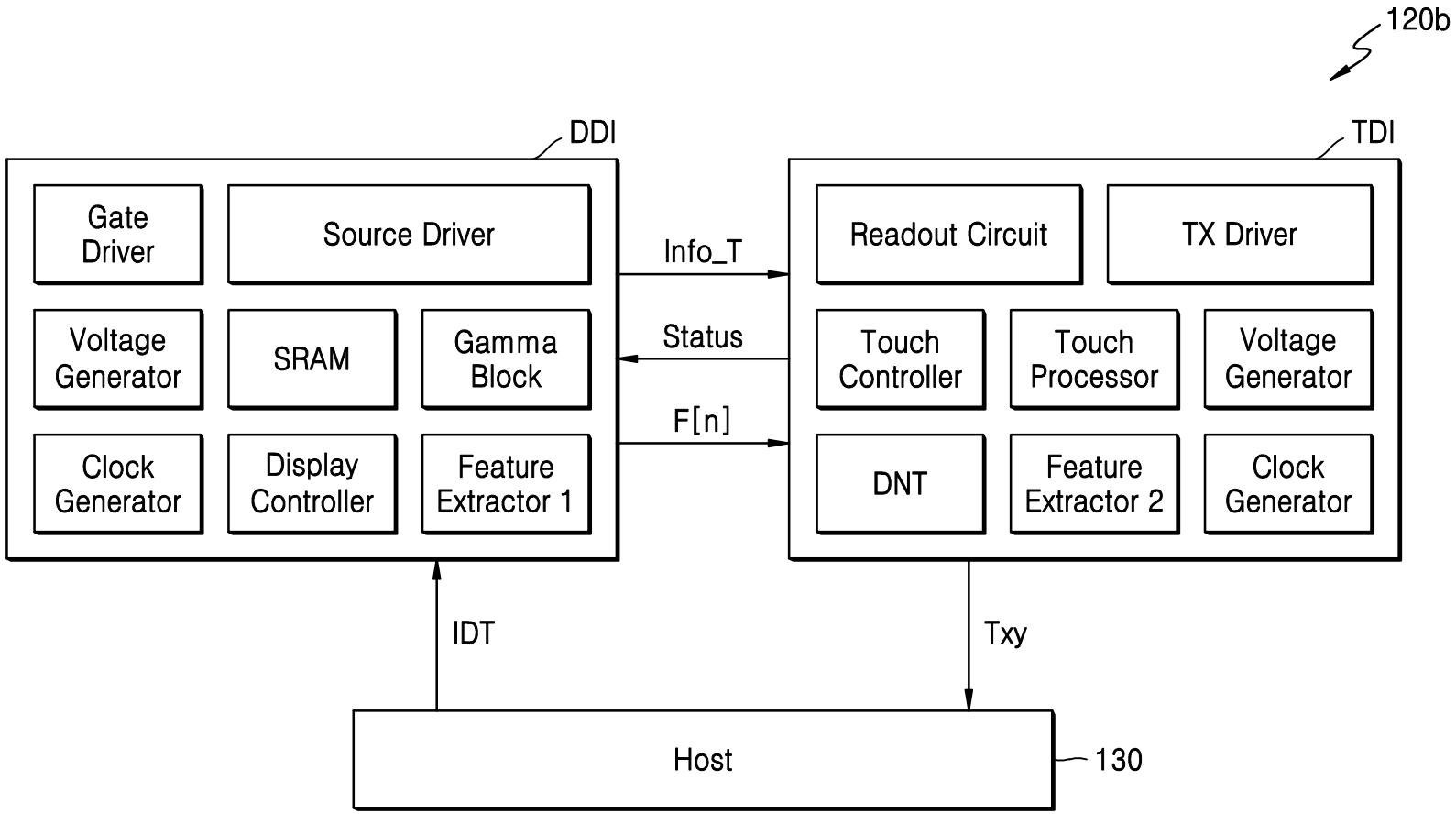
120b
DDI
TDI
Gate Driver
Source Driver
Voltage Generator
SRAM
Gamma Block
Clock Generator
Display Controller
Feature Extractor 1
Info_T
Status
F[n]
Readout Circuit
TX Driver
Touch Controller
Touch Processor
Voltage Generator
DNT
Feature Extractor 2
Clock Generator
IDT
Txy
Host
130

FIG. 10

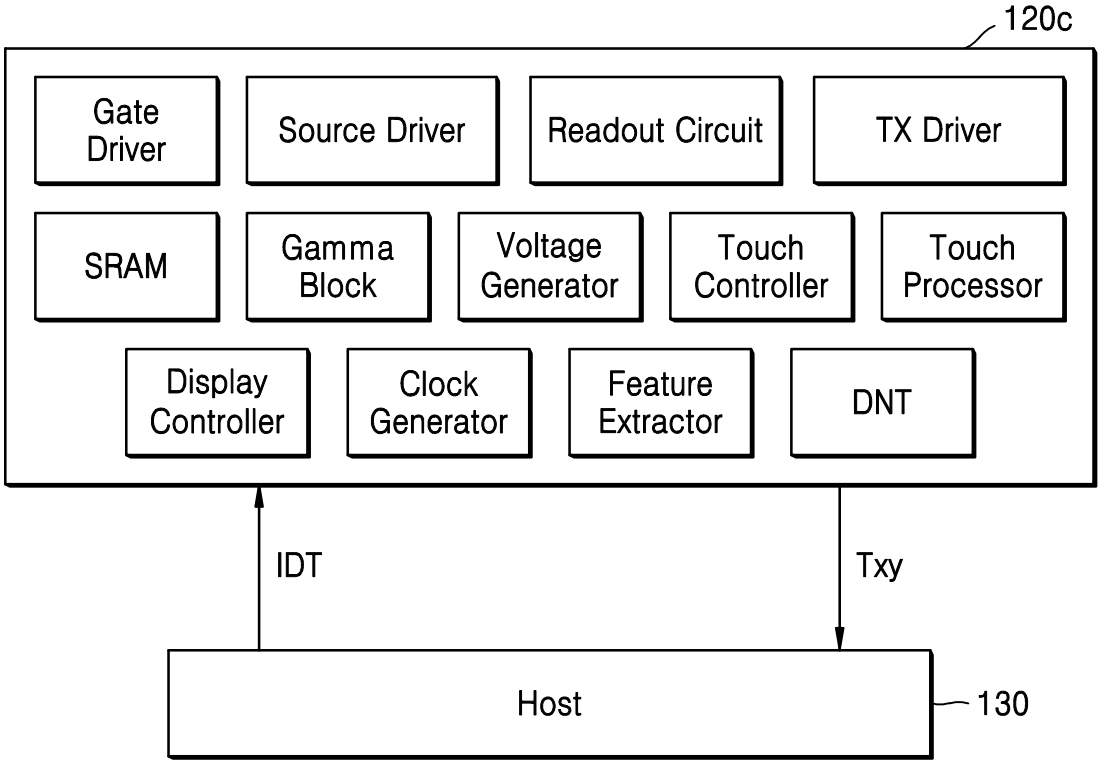
120c
Gate Driver
Source Driver
Readout Circuit
TX Driver
SRAM
Gamma Block
Voltage Generator
Touch Controller
Touch Processor
Display Controller
Clock Generator
Feature Extractor
DNT
IDT
Txy
Host
130

FIG. 11A

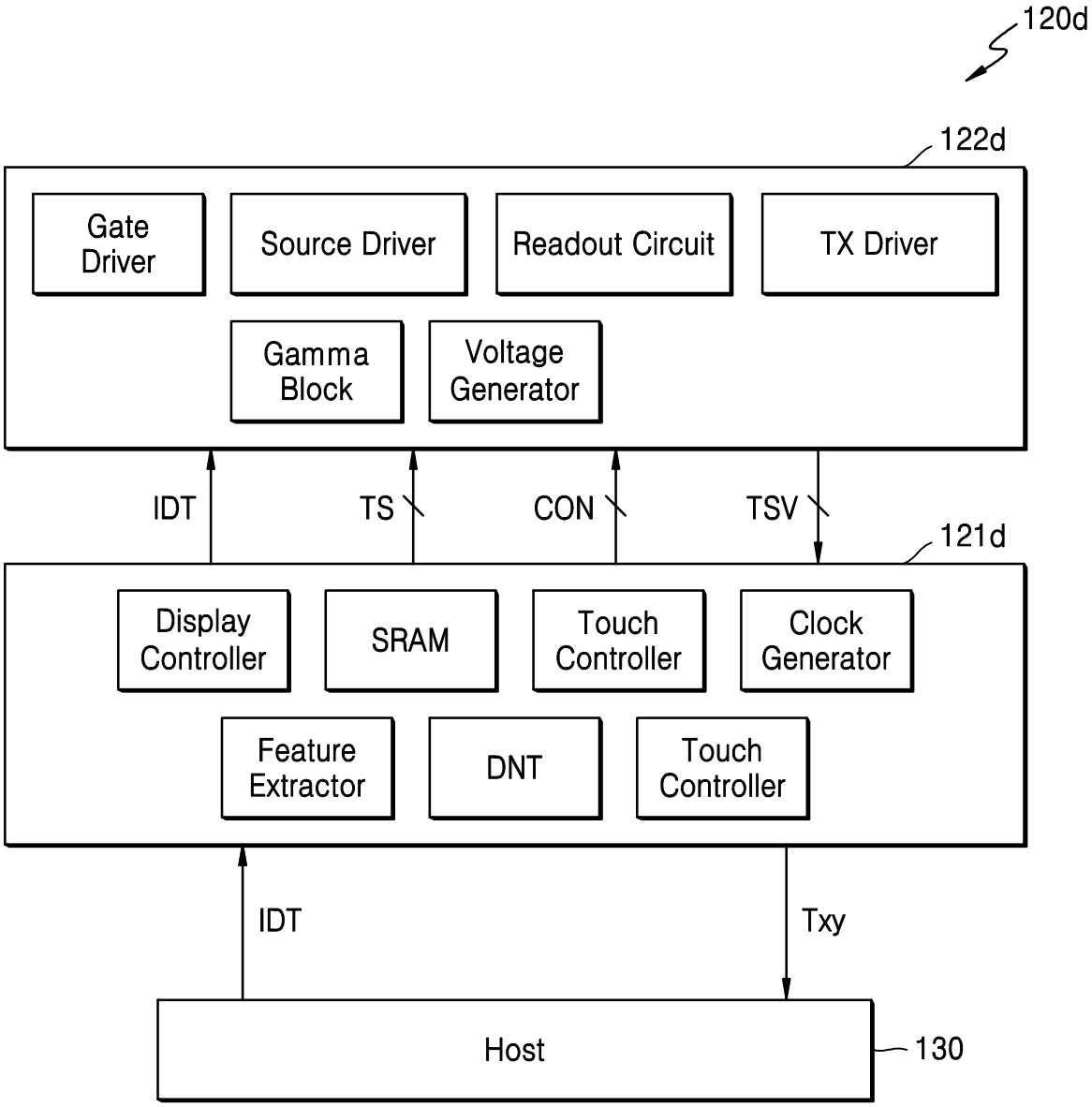
120d
122d
Gate Driver
Source Driver
Readout Circuit
TX Driver
Gamma Block
Voltage Generator
IDT
TS
CON
TSV
121d
Display Controller
SRAM
Touch Controller
Clock Generator
Feature Extractor
DNT
Touch Controller
IDT
Txy
Host
130

FIG. 11B

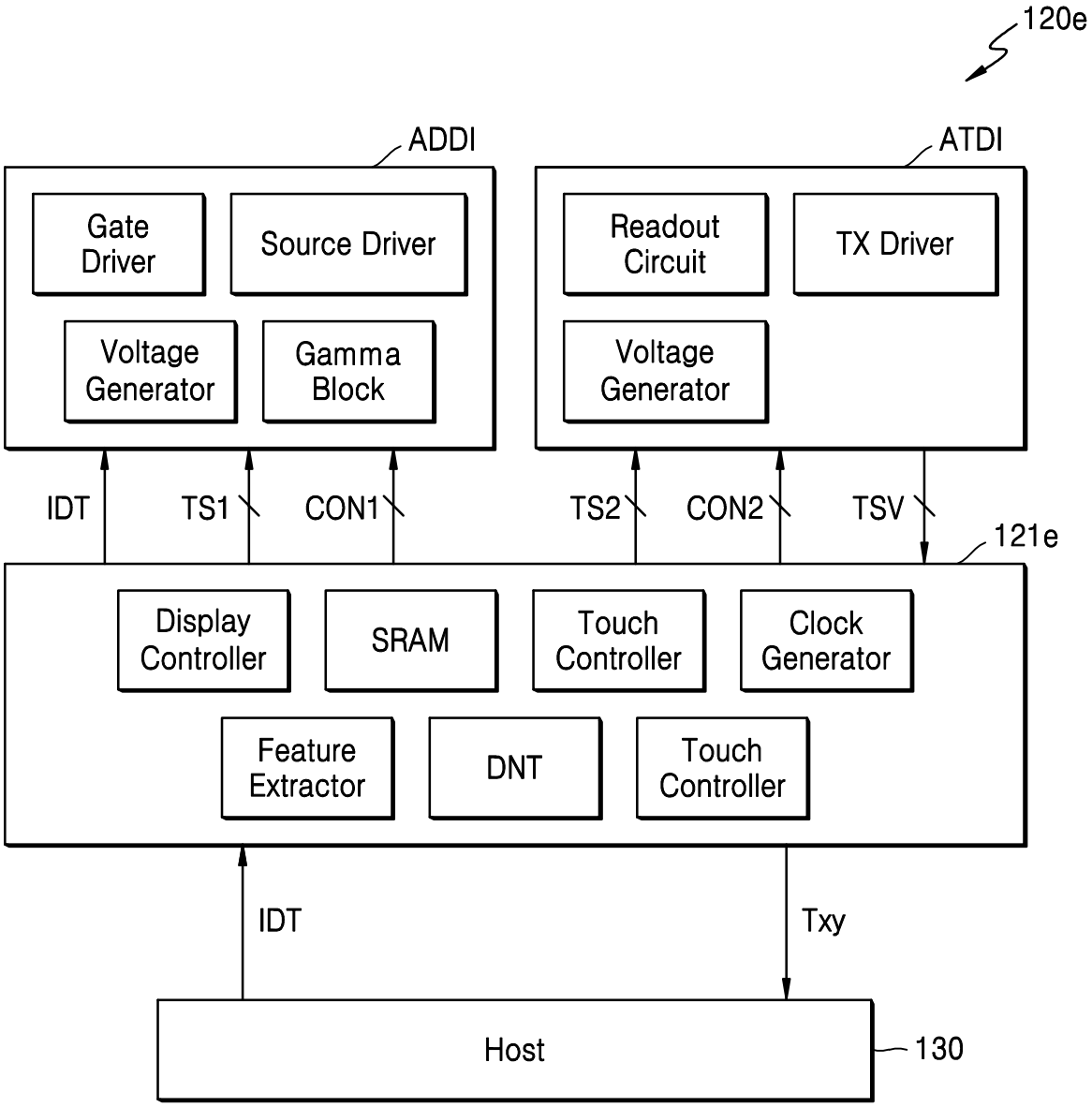
120e
ADDI
ATDI
Gate Driver
Source Driver
Voltage Generator
Gamma Block
Readout Circuit
TX Driver
Voltage Generator
IDT
TS1
CON1
TS2
CON2
TSV
121e
Display Controller
SRAM
Touch Controller
Clock Generator
Feature Extractor
DNT
Touch Controller
IDT
Txy
Host
130