Fig. 1

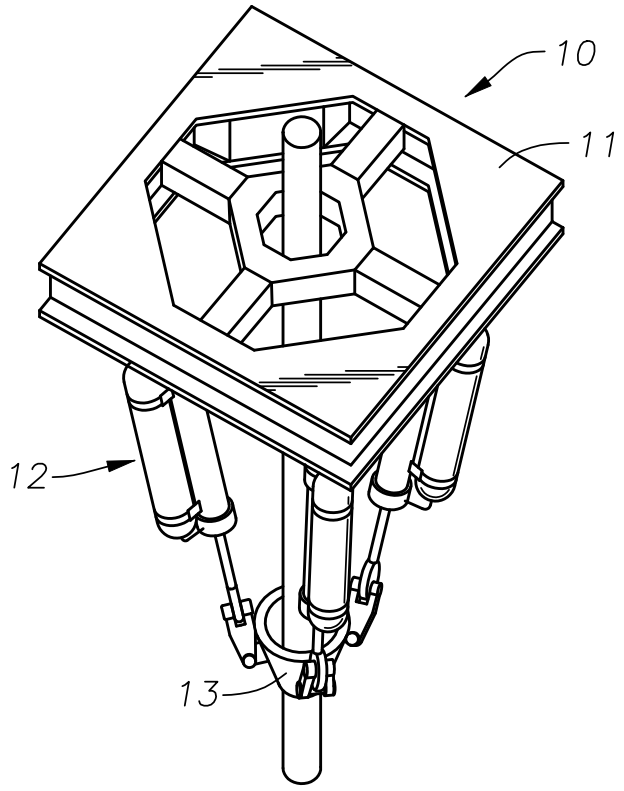


Fig. 3

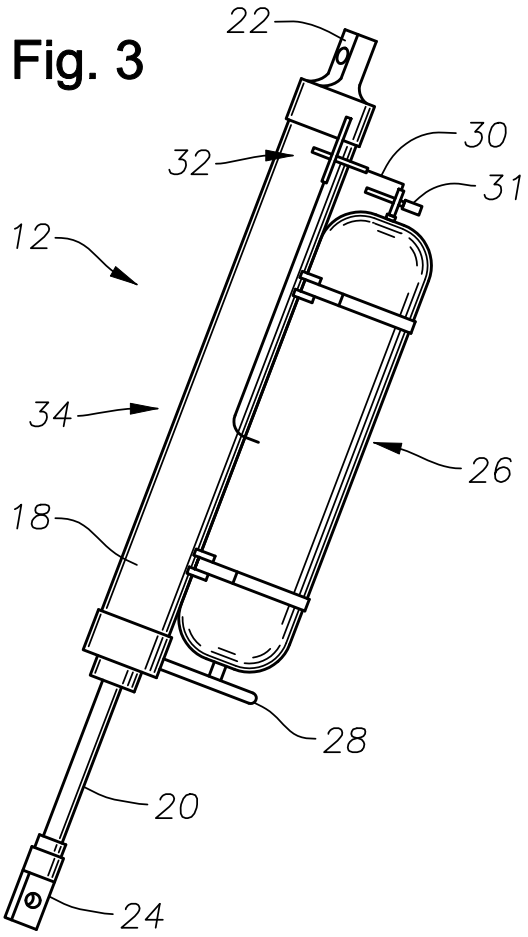


Fig. 2

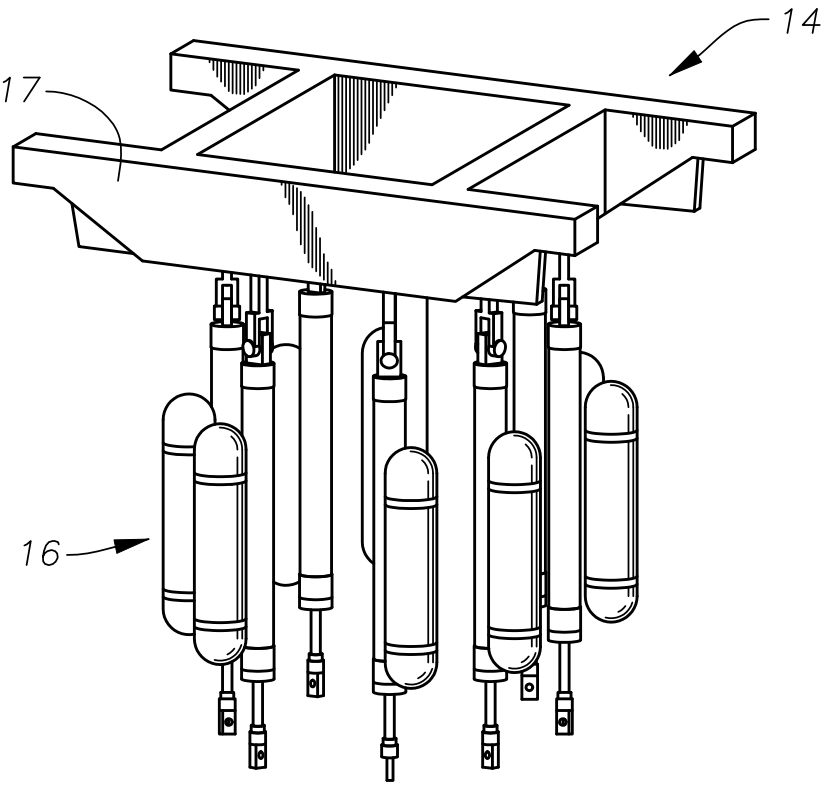

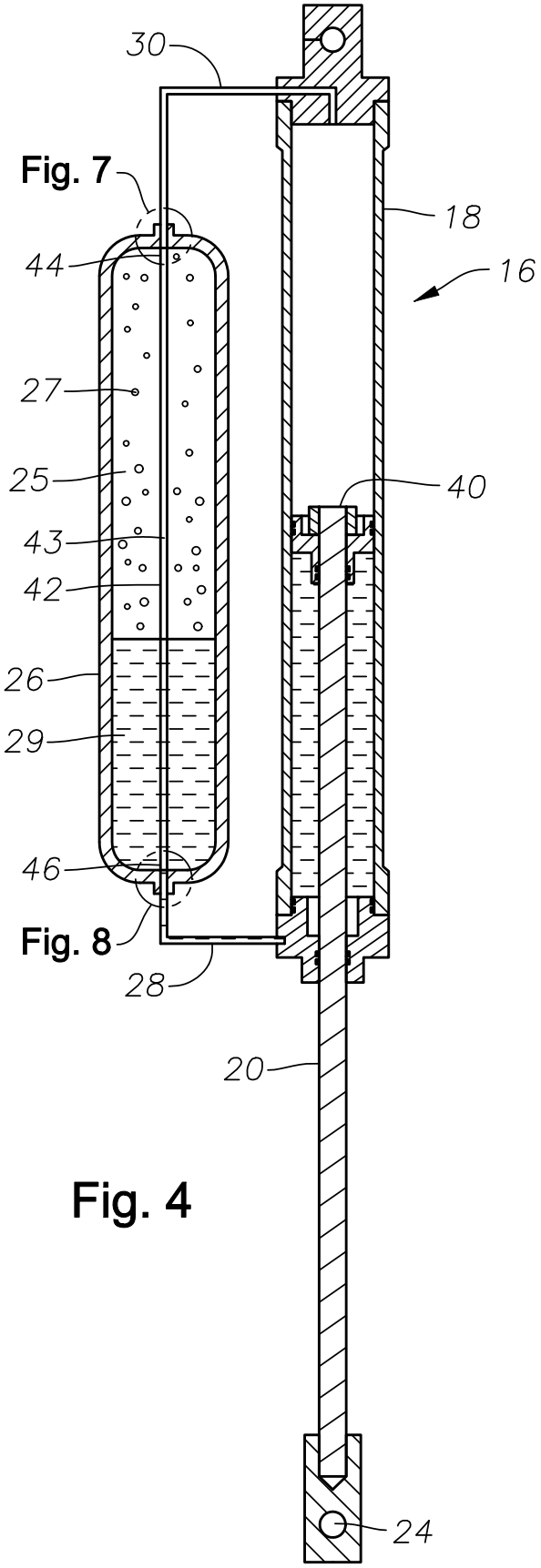


Fig. 4

Fig. 7

Fig. 8

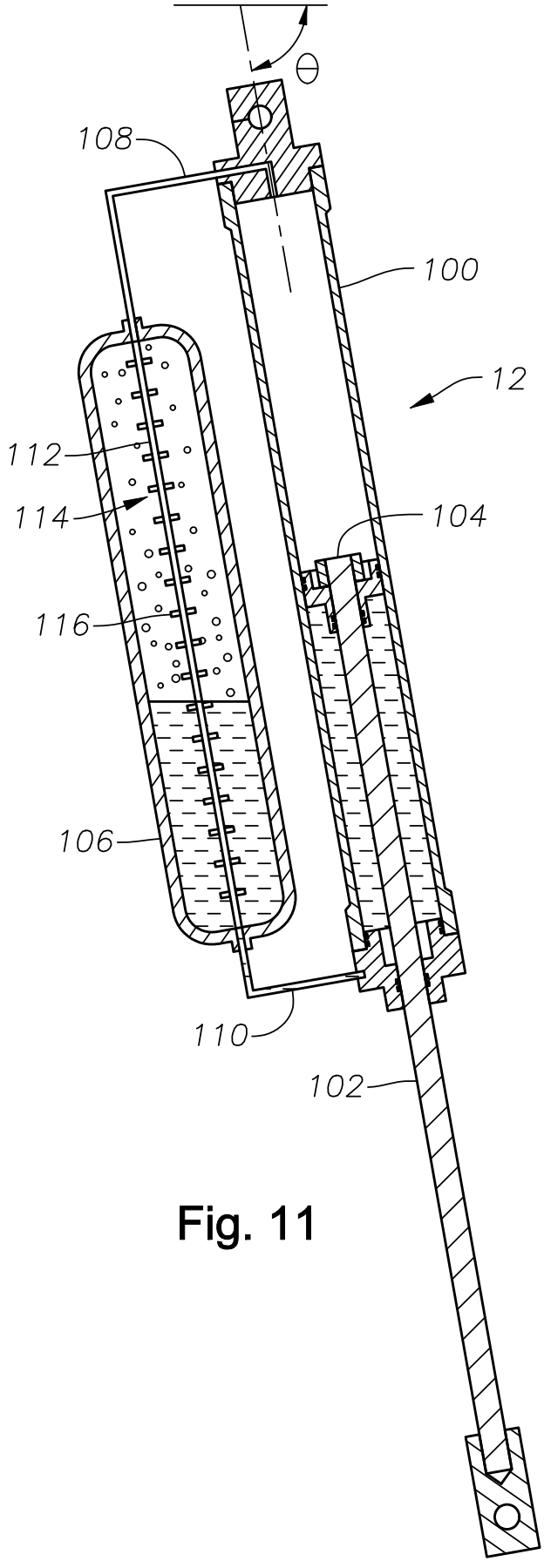


Fig. 11

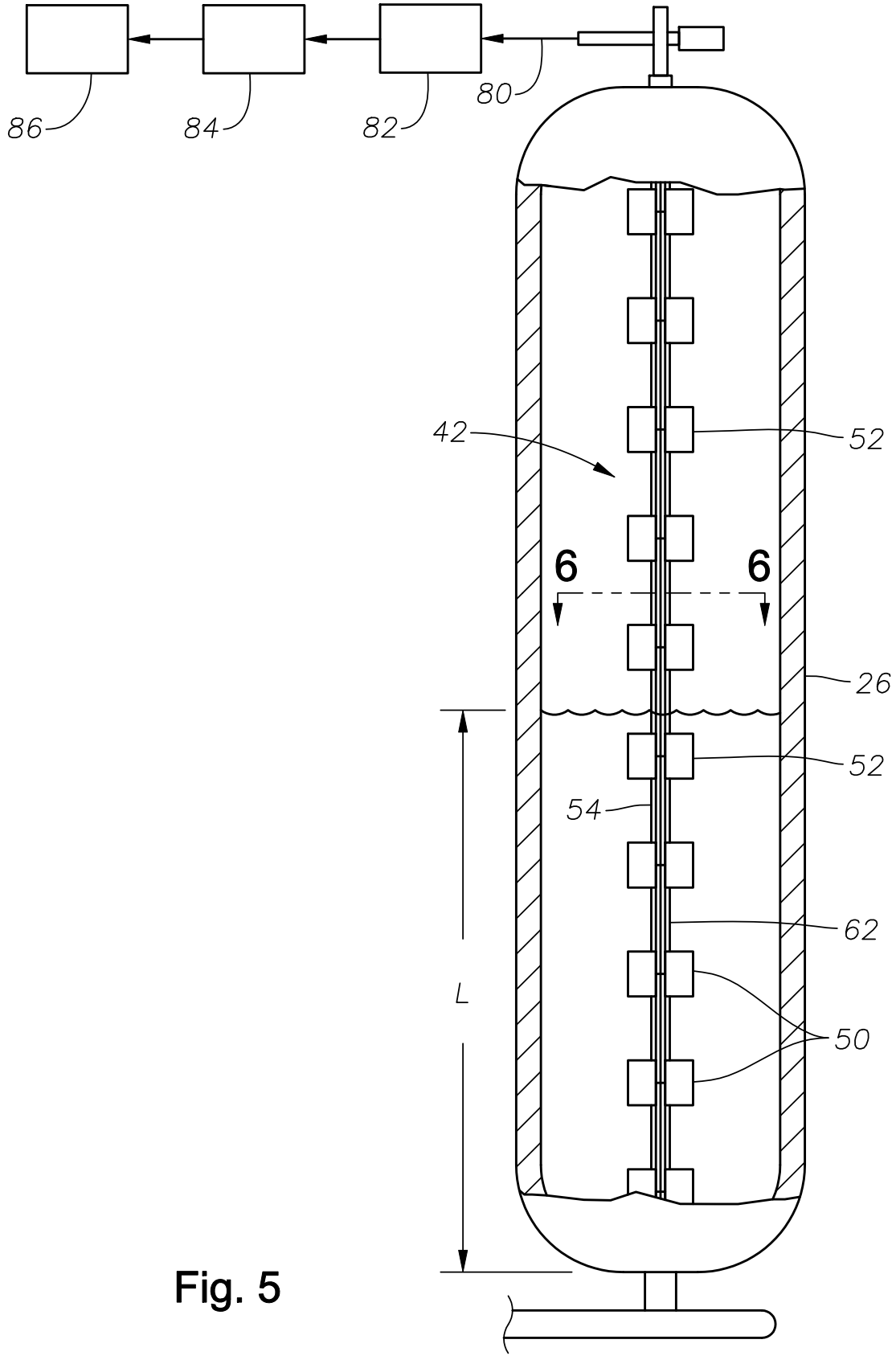


Fig. 5

Fig. 6

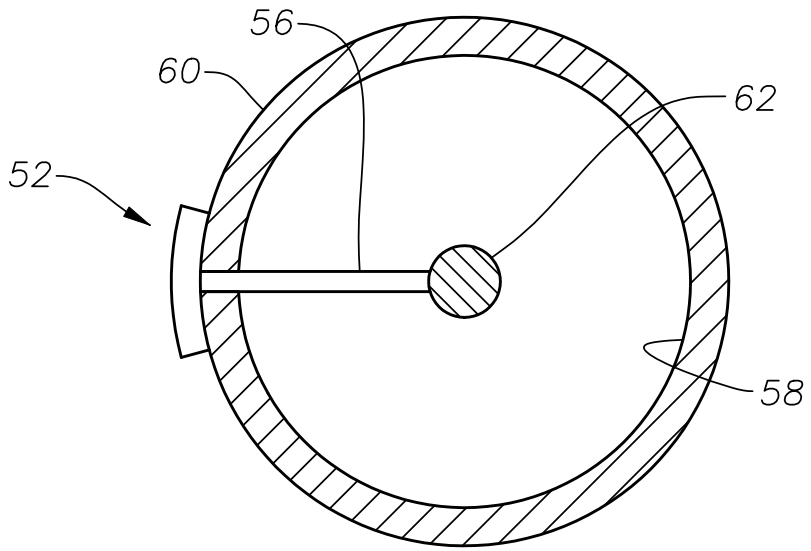


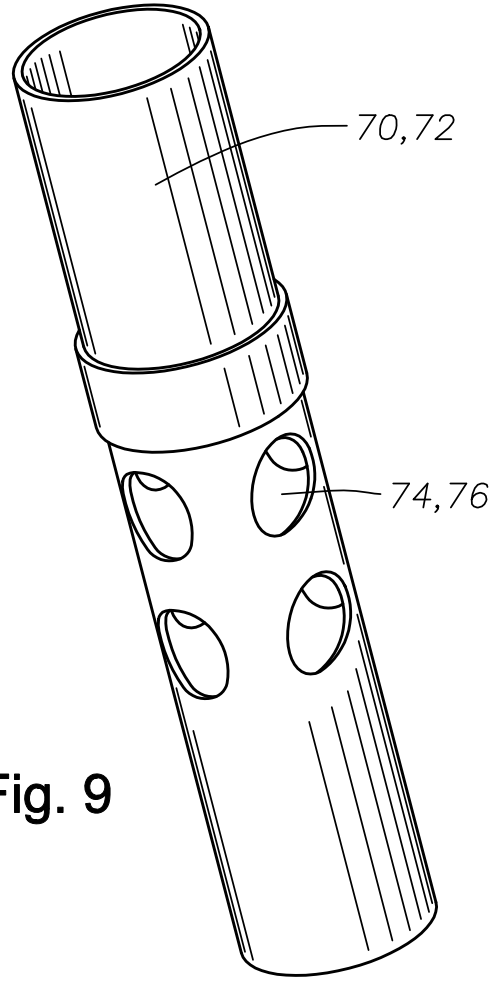


Fig. 9

Fig. 7

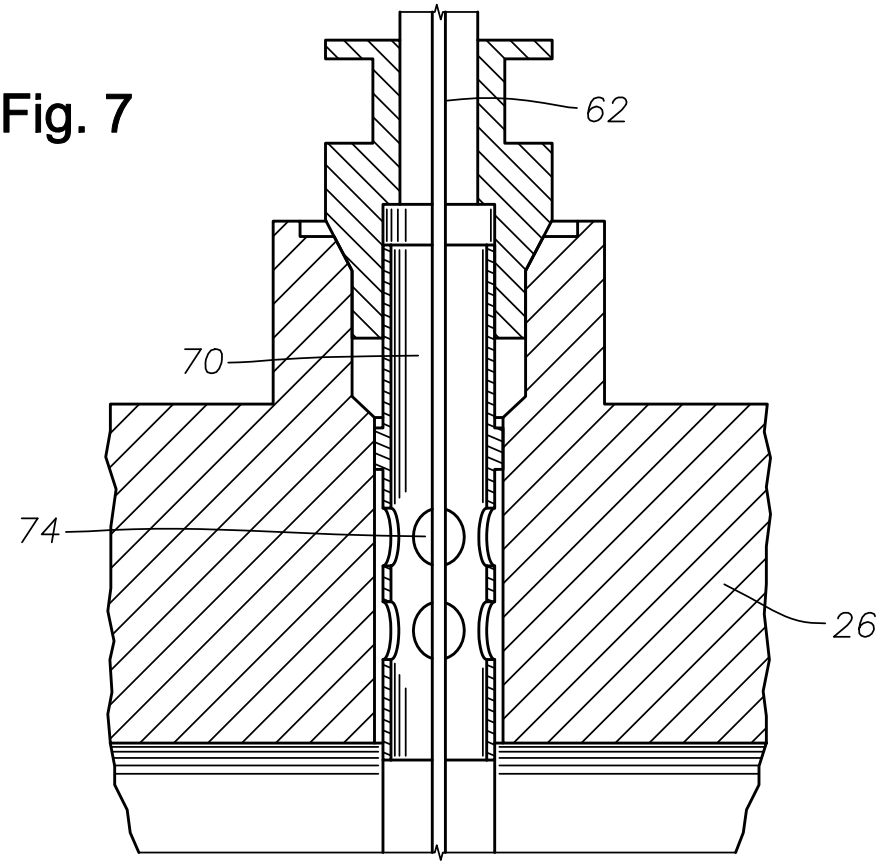


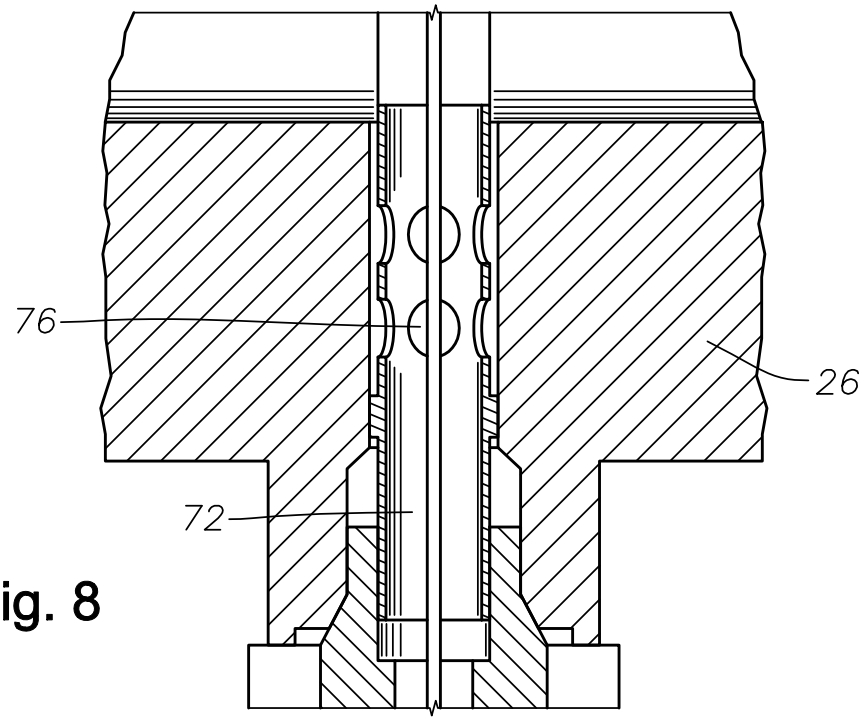


Fig. 8

Fig. 10

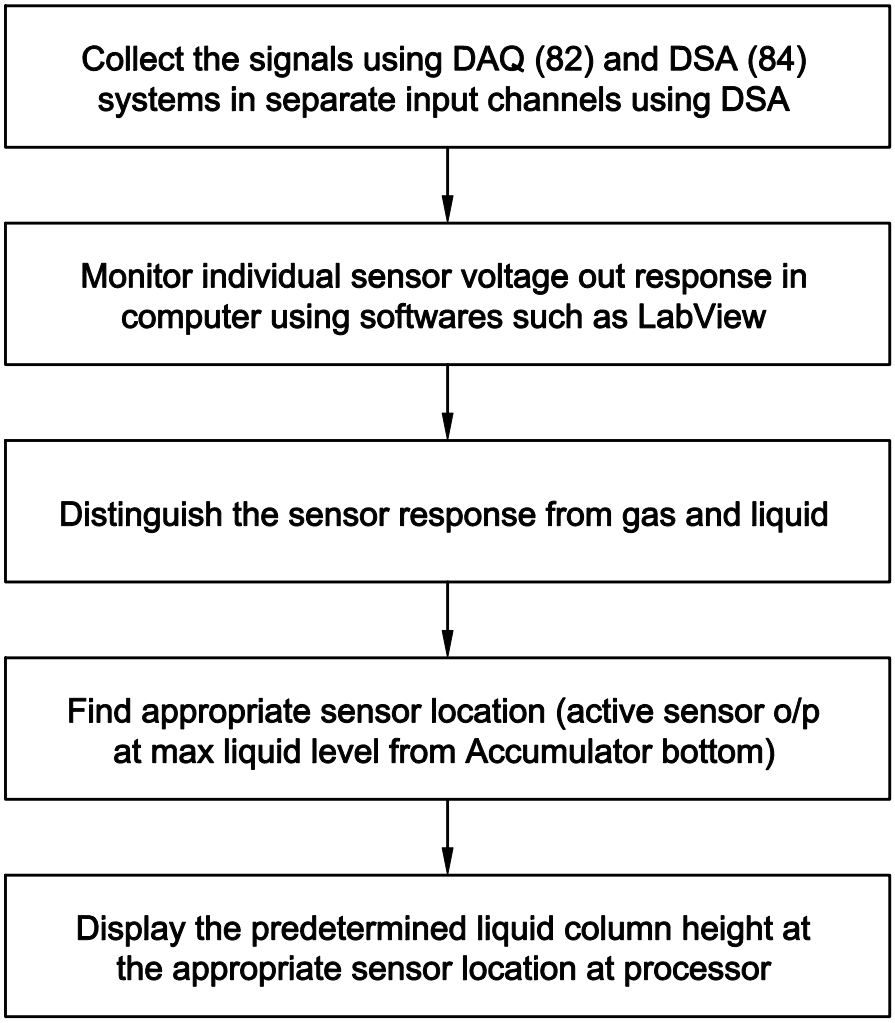
Collect the signals using DAQ (82) and DSA (84) systems in separate input channels using DSA
Monitor individual sensor voltage out response in computer using softwares such as LabView
Distinguish the sensor response from gas and liquid
Find appropriate sensor location (active sensor o/p at max liquid level from Accumulator bottom)
Display the predetermined liquid column height at the appropriate sensor location at processor
N2, compressible gas obeys polytrophic process. P1 and V1 are initial gas pressure and volume whereas P2 and V2 are dynamic pressure and volume of N2 gas in changed state
Polytropic process
$\frac{P1}{P2} = \left(\frac{V2}{V1}\right)^{n}$
n = 1.1