FIG. 1

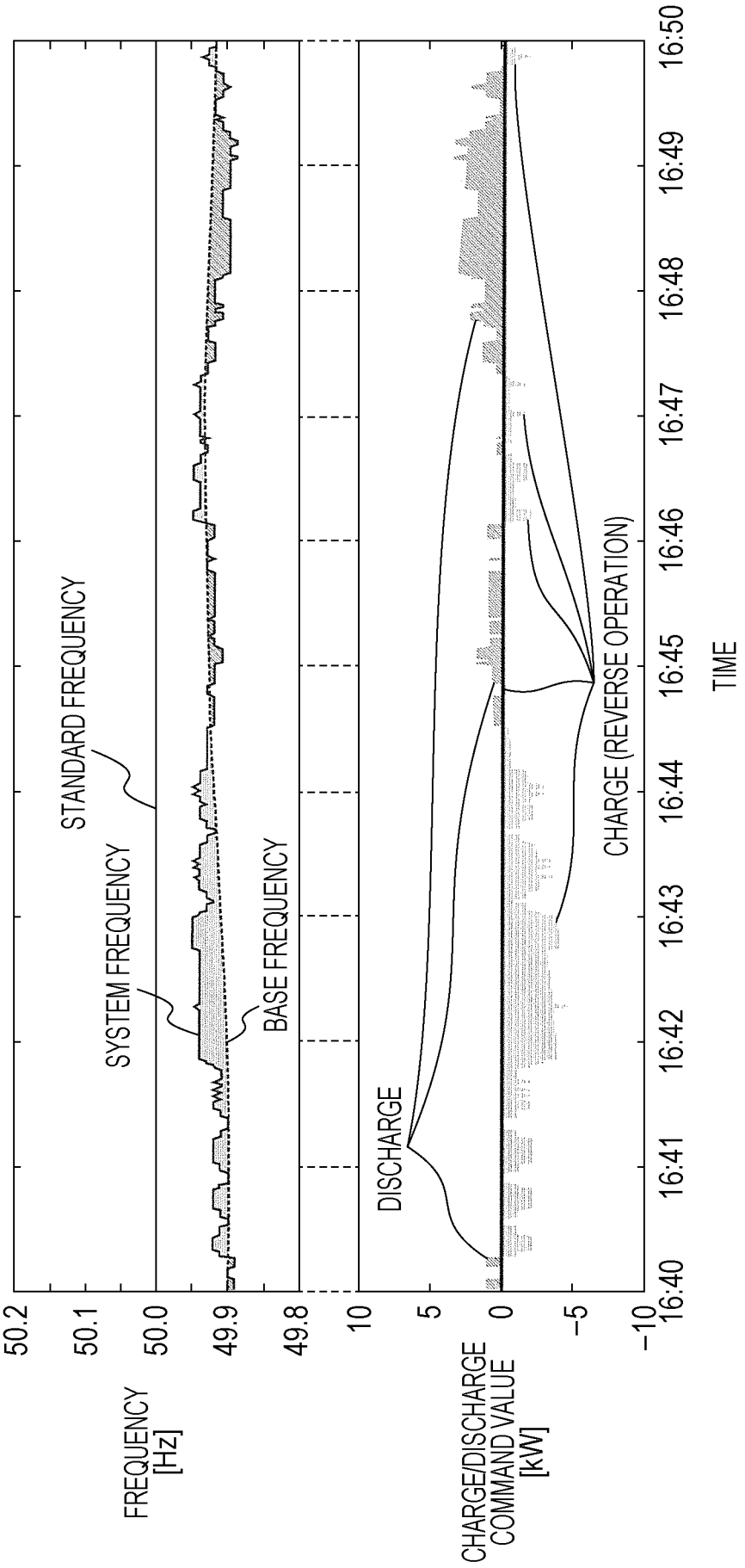
STANDARD FREQUENCY
SYSTEM FREQUENCY
BASE FREQUENCY
FREQUENCY [Hz]
50.2
50.1
50.0
49.9
49.8
DISCHARGE
CHARGE (REVERSE OPERATION)
CHARGE/DISCHARGE COMMAND VALUE [kW]
10
5
0
−5
−10
16:40
16:41
16:42
16:43
16:44
16:45
16:46
16:47
16:48
16:49
16:50
TIME

FIG. 2

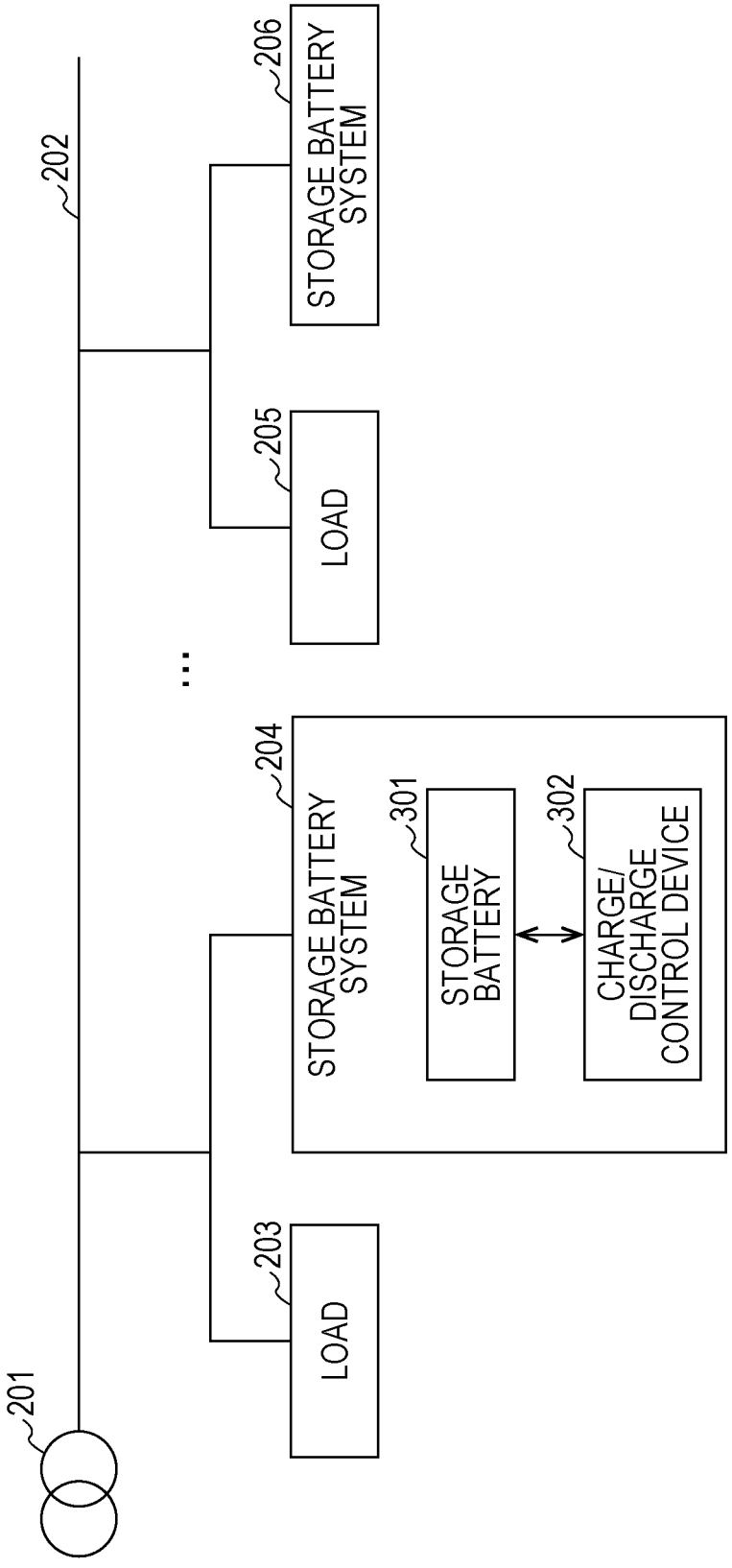
201
202
203
LOAD
204
STORAGE BATTERY SYSTEM
301
STORAGE BATTERY
302
CHARGE/ DISCHARGE CONTROL DEVICE
205
LOAD
206
STORAGE BATTERY SYSTEM

FIG. 3

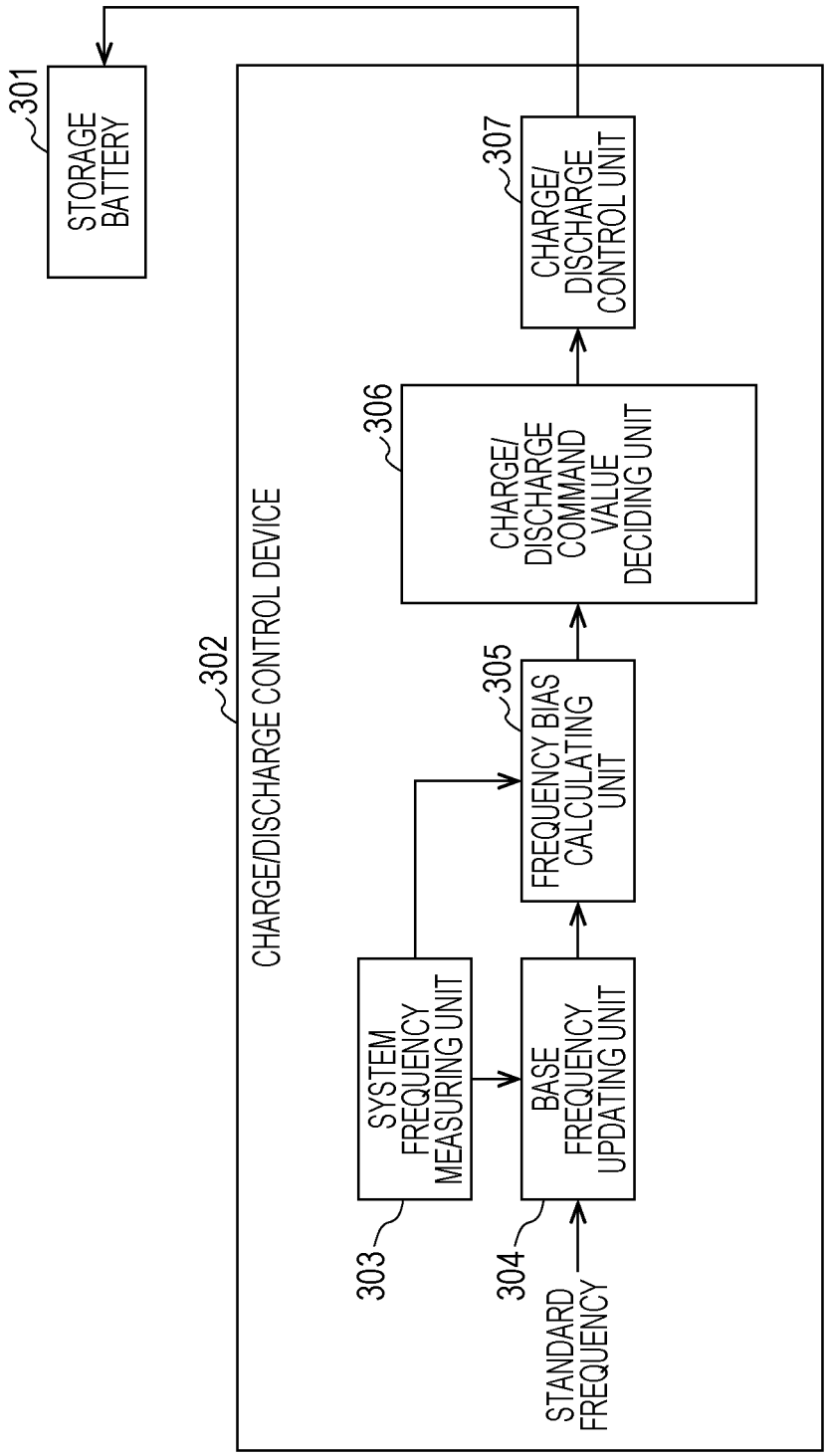
301
STORAGE BATTERY
302
CHARGE/DISCHARGE CONTROL DEVICE
303
SYSTEM FREQUENCY MEASURING UNIT
304
BASE FREQUENCY UPDATING UNIT
STANDARD FREQUENCY
305
FREQUENCY BIAS CALCULATING UNIT
306
CHARGE/ DISCHARGE COMMAND VALUE DECIDING UNIT
307
CHARGE/ DISCHARGE CONTROL UNIT

FIG. 4

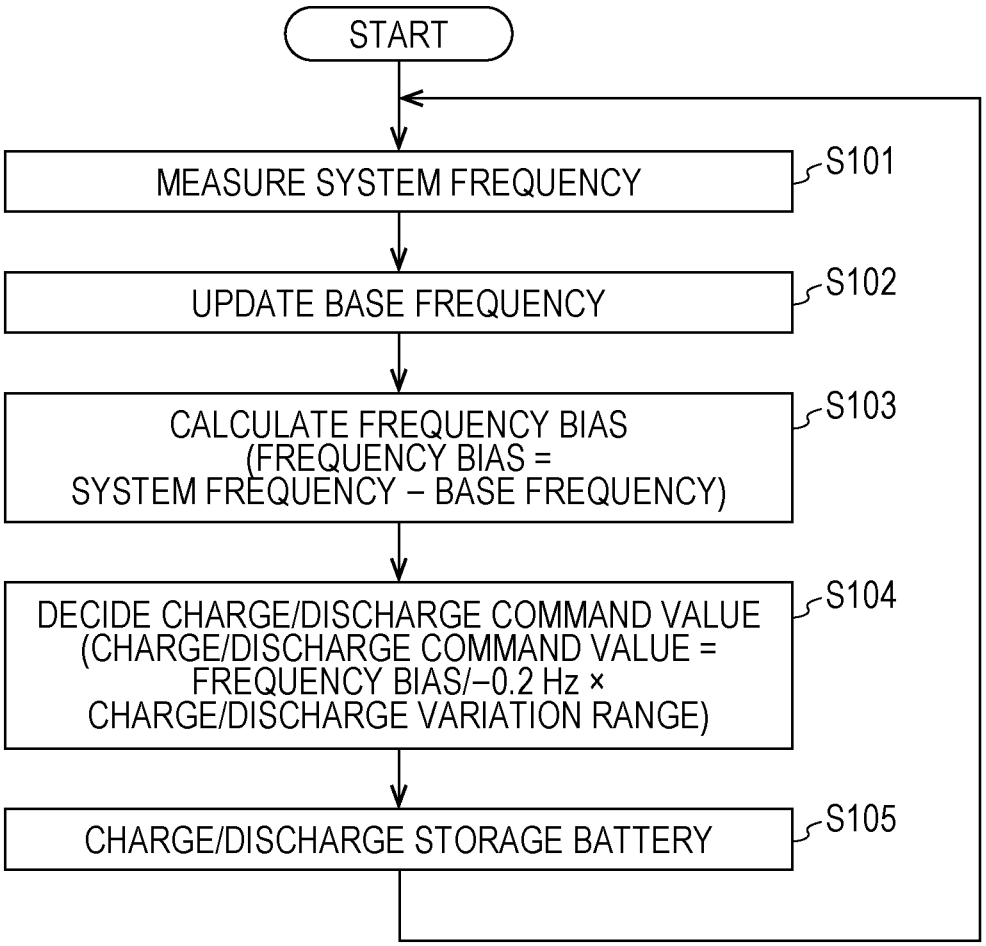
START
MEASURE SYSTEM FREQUENCY
S101
UPDATE BASE FREQUENCY
S102
CALCULATE FREQUENCY BIAS
(FREQUENCY BIAS =
SYSTEM FREQUENCY − BASE FREQUENCY)
S103
DECIDE CHARGE/DISCHARGE COMMAND VALUE
(CHARGE/DISCHARGE COMMAND VALUE =
FREQUENCY BIAS/−0.2 Hz ×
CHARGE/DISCHARGE VARIATION RANGE)
S104
CHARGE/DISCHARGE STORAGE BATTERY
S105

FIG. 5

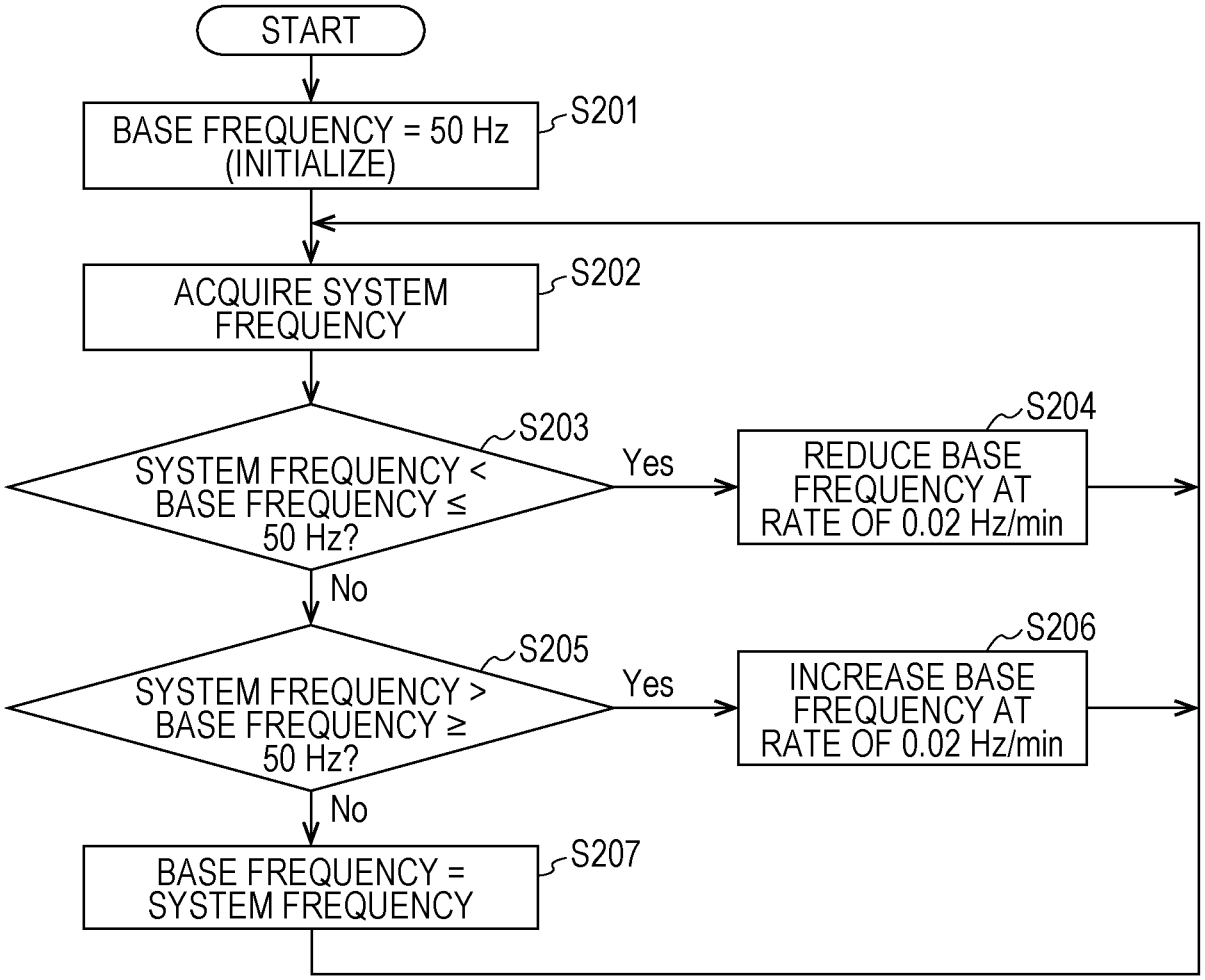
START
BASE FREQUENCY = 50 Hz (INITIALIZE)
S201
ACQUIRE SYSTEM FREQUENCY
S202
SYSTEM FREQUENCY < BASE FREQUENCY ≤ 50 Hz?
S203
Yes
REDUCE BASE FREQUENCY AT RATE OF 0.02 Hz/min
S204
No
SYSTEM FREQUENCY > BASE FREQUENCY ≥ 50 Hz?
S205
Yes
INCREASE BASE FREQUENCY AT RATE OF 0.02 Hz/min
S206
No
BASE FREQUENCY = SYSTEM FREQUENCY
S207

FIG. 6

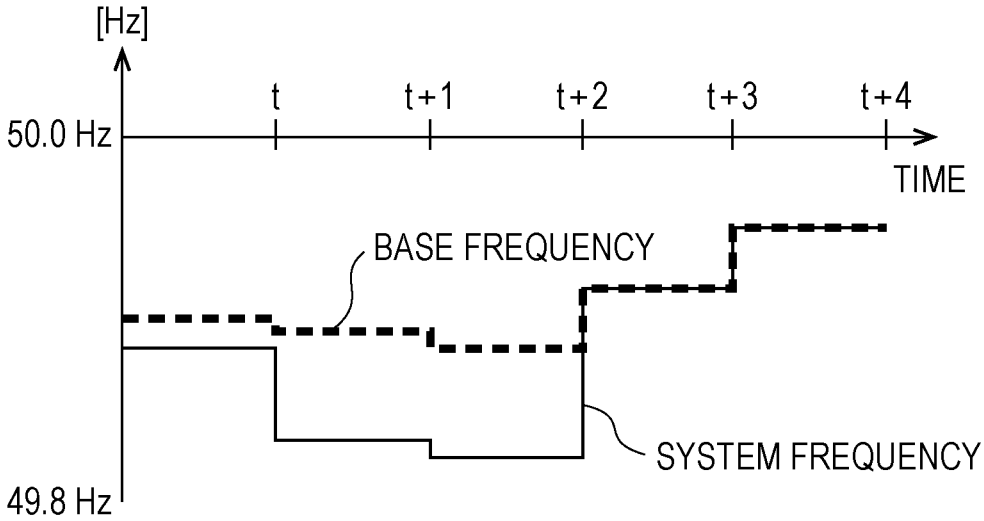
[Hz]
50.0 Hz
t
t+1
t+2
t+3
t+4
TIME
BASE FREQUENCY
SYSTEM FREQUENCY
49.8 Hz

FIG. 7

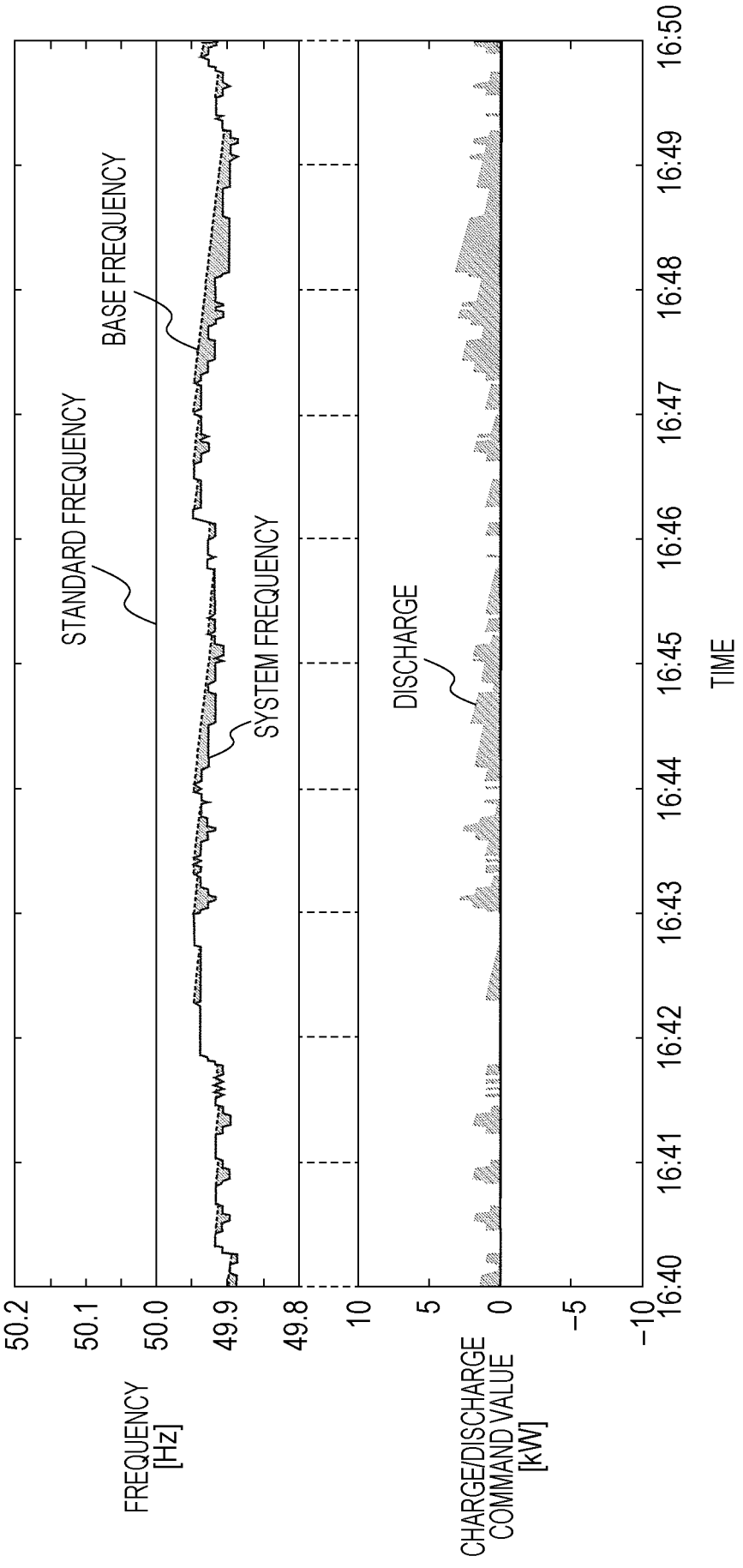
50.2
50.1
50.0
49.9
49.8
FREQUENCY [Hz]
STANDARD FREQUENCY
BASE FREQUENCY
SYSTEM FREQUENCY
10
5
0
−5
−10
CHARGE/DISCHARGE COMMAND VALUE [kW]
DISCHARGE
16:40
16:41
16:42
16:43
16:44
16:45
16:46
16:47
16:48
16:49
16:50
TIME

FIG. 8

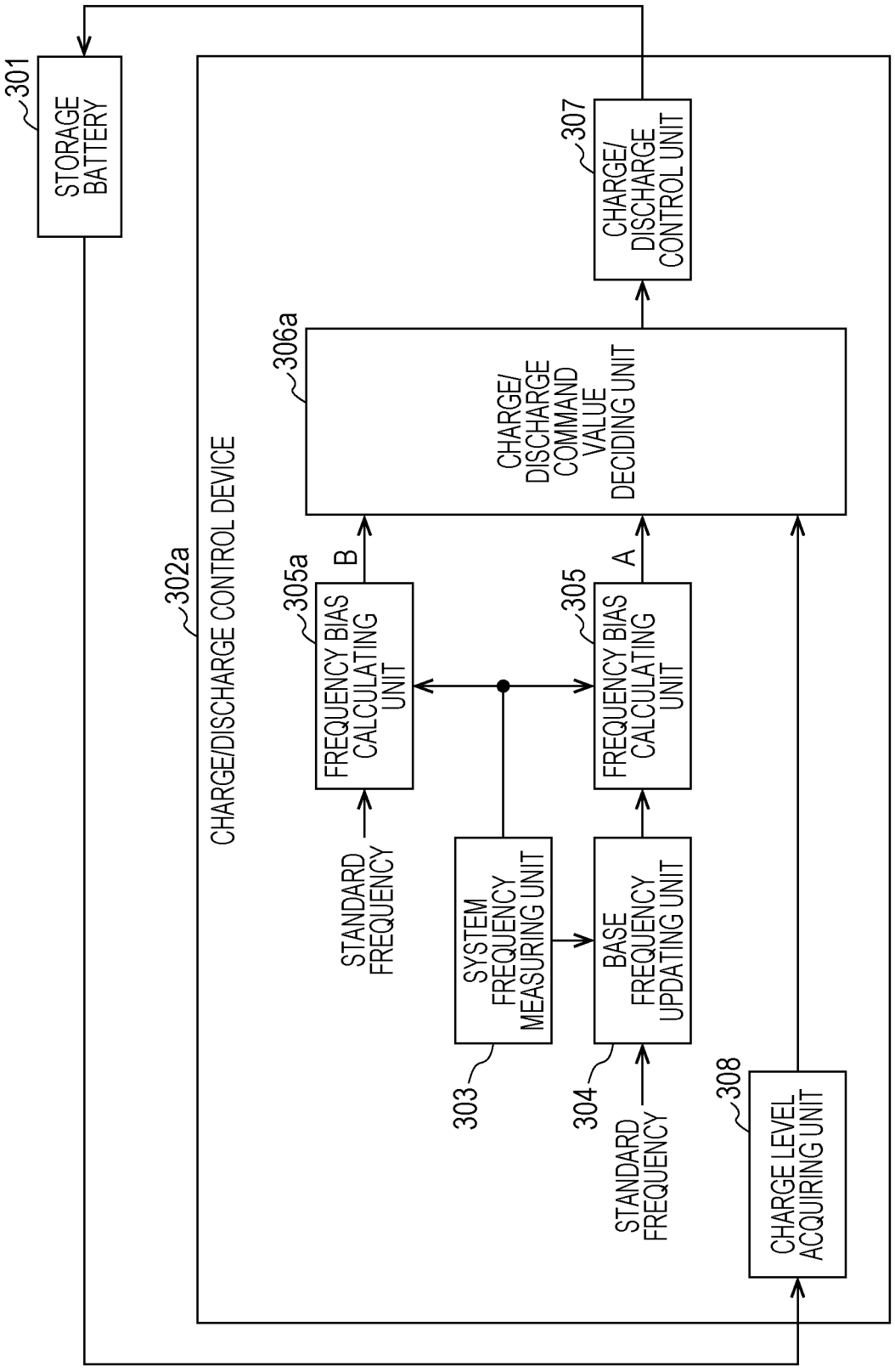
301
STORAGE BATTERY
307
CHARGE/ DISCHARGE CONTROL UNIT
306a
CHARGE/ DISCHARGE COMMAND VALUE DECIDING UNIT
302a
CHARGE/DISCHARGE CONTROL DEVICE
305a
B
FREQUENCY BIAS CALCULATING UNIT
305
A
FREQUENCY BIAS CALCULATING UNIT
STANDARD FREQUENCY
SYSTEM FREQUENCY MEASURING UNIT
BASE FREQUENCY UPDATING UNIT
303
304
STANDARD FREQUENCY
308
CHARGE LEVEL ACQUIRING UNIT

FIG. 9

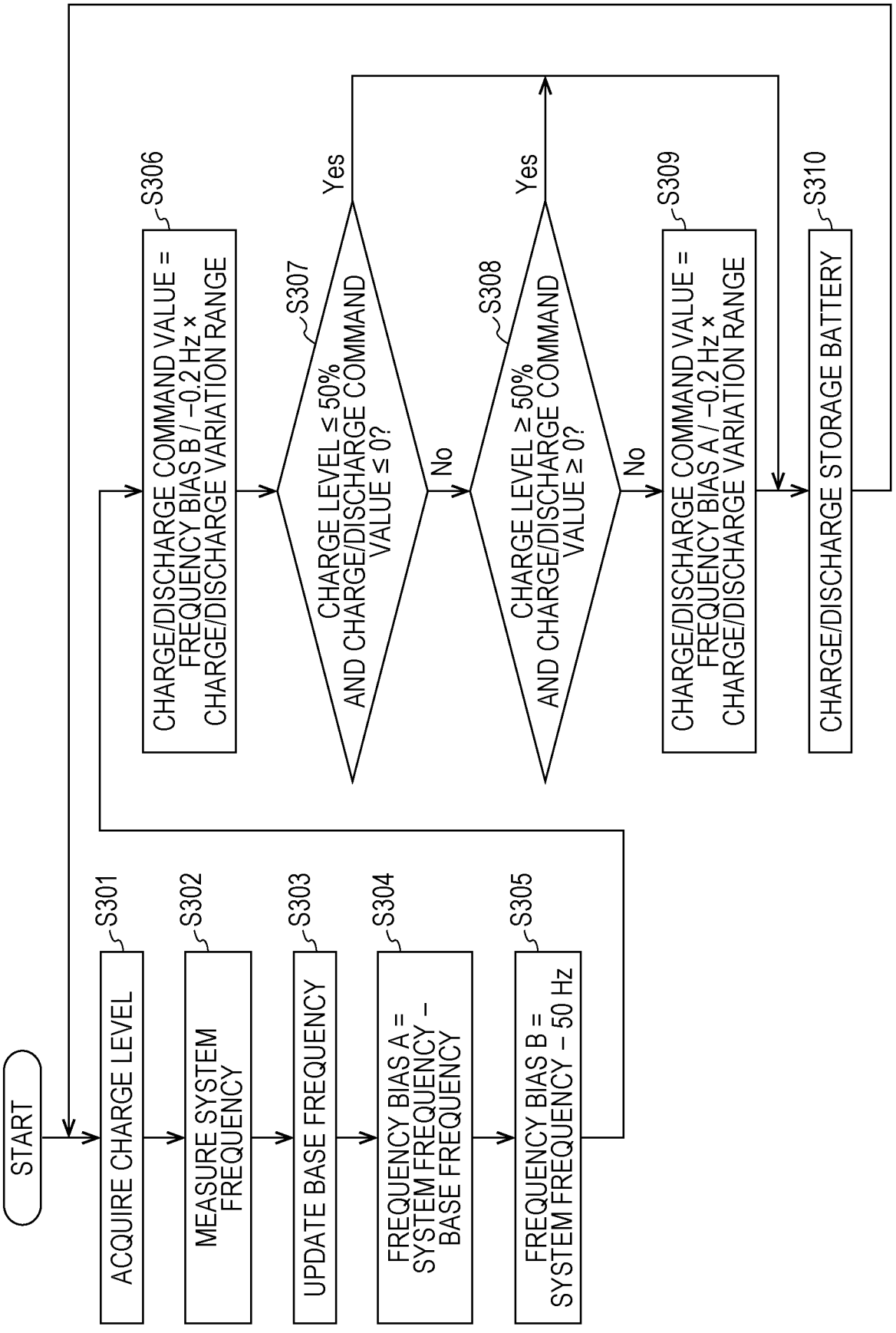
START
S301
ACQUIRE CHARGE LEVEL
S302
MEASURE SYSTEM FREQUENCY
S303
UPDATE BASE FREQUENCY
S304
FREQUENCY BIAS A = SYSTEM FREQUENCY − BASE FREQUENCY
S305
FREQUENCY BIAS B = SYSTEM FREQUENCY − 50 Hz
S306
CHARGE/DISCHARGE COMMAND VALUE = FREQUENCY BIAS B / −0.2 Hz × CHARGE/DISCHARGE VARIATION RANGE
S307
CHARGE LEVEL ≤ 50% AND CHARGE/DISCHARGE COMMAND VALUE ≤ 0?
Yes
No
S308
CHARGE LEVEL ≥ 50% AND CHARGE/DISCHARGE COMMAND VALUE ≥ 0?
Yes
No
S309
CHARGE/DISCHARGE COMMAND VALUE = FREQUENCY BIAS A / −0.2 Hz × CHARGE/DISCHARGE VARIATION RANGE
S310
CHARGE/DISCHARGE STORAGE BATTERY

FIG. 10

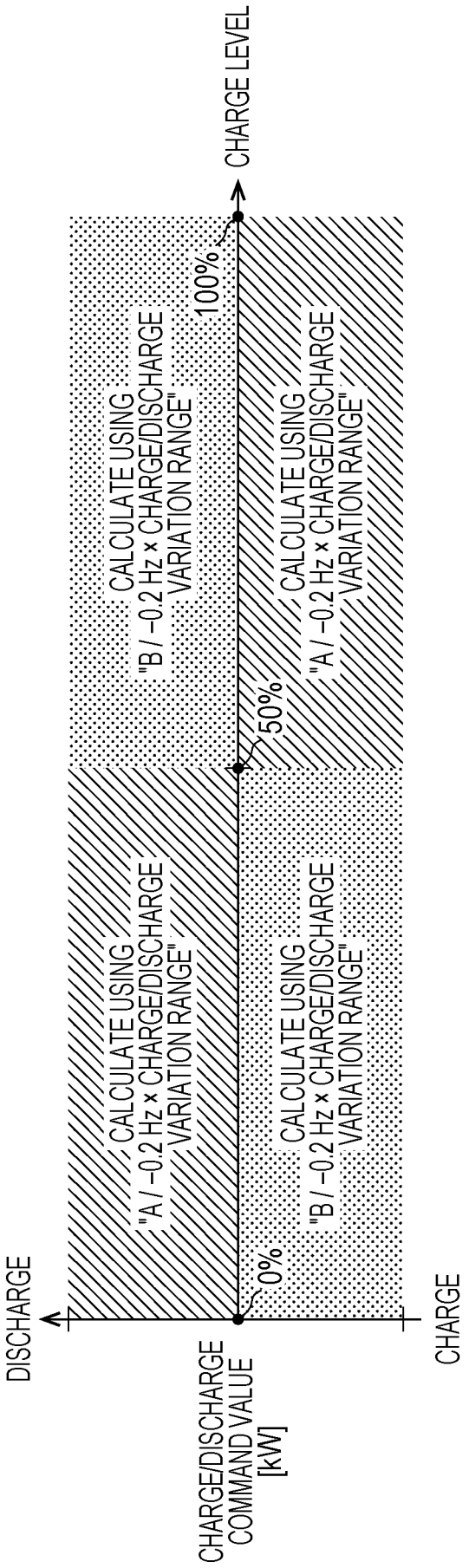
CHARGE LEVEL
100%
50%
0%
CALCULATE USING "B / −0.2 Hz × CHARGE/DISCHARGE VARIATION RANGE"
CALCULATE USING "A / −0.2 Hz × CHARGE/DISCHARGE VARIATION RANGE"
CALCULATE USING "A / −0.2 Hz × CHARGE/DISCHARGE VARIATION RANGE"
CALCULATE USING "B / −0.2 Hz × CHARGE/DISCHARGE VARIATION RANGE"
DISCHARGE
CHARGE
CHARGE/DISCHARGE COMMAND VALUE [kW]

FIG. 11

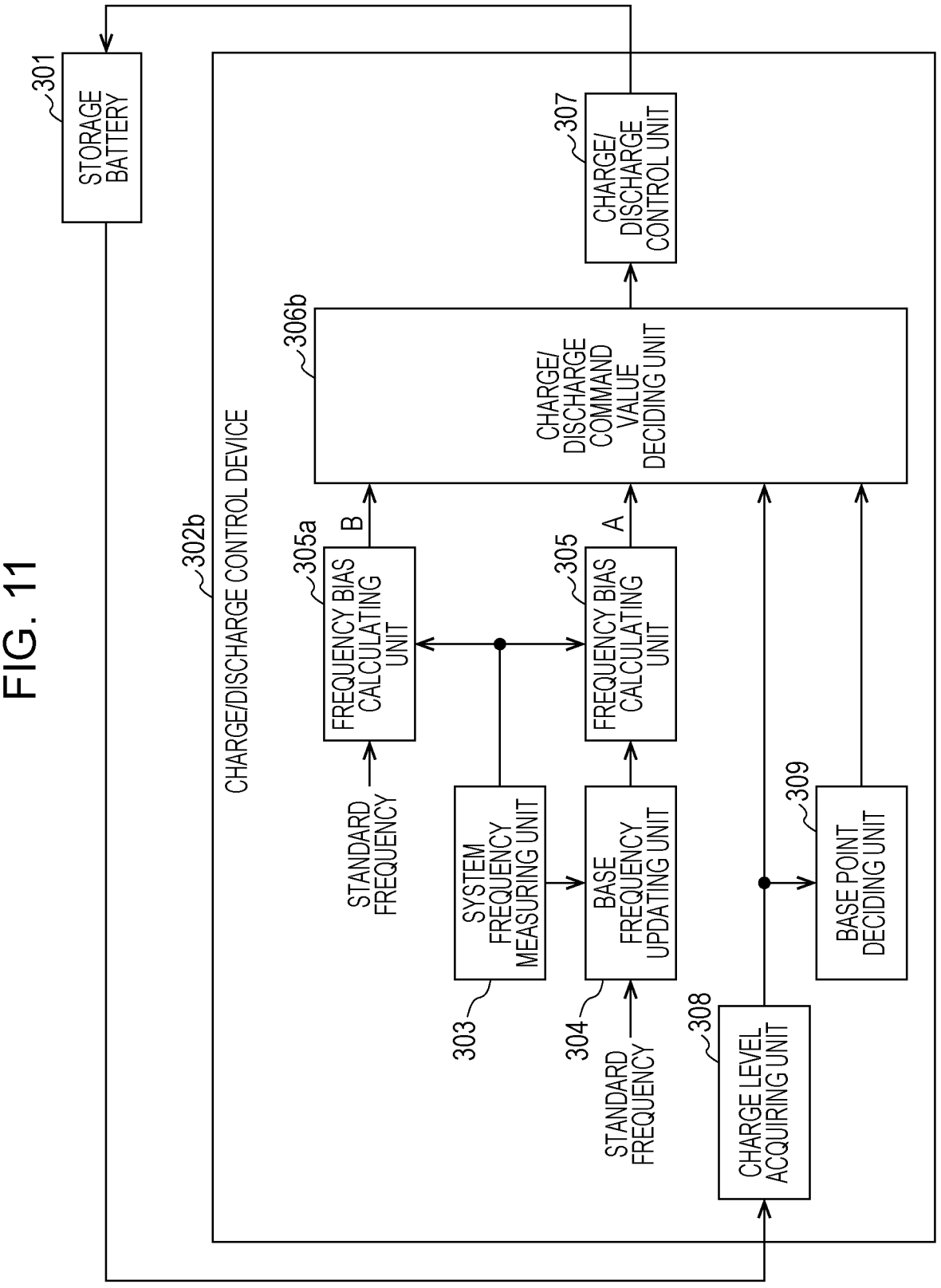
301
STORAGE BATTERY
302b
CHARGE/DISCHARGE CONTROL DEVICE
307
CHARGE/ DISCHARGE CONTROL UNIT
306b
CHARGE/ DISCHARGE COMMAND VALUE DECIDING UNIT
305a
B
FREQUENCY BIAS CALCULATING UNIT
305
A
FREQUENCY BIAS CALCULATING UNIT
STANDARD FREQUENCY
SYSTEM FREQUENCY MEASURING UNIT
303
BASE FREQUENCY UPDATING UNIT
304
STANDARD FREQUENCY
309
BASE POINT DECIDING UNIT
308
CHARGE LEVEL ACQUIRING UNIT

FIG. 12

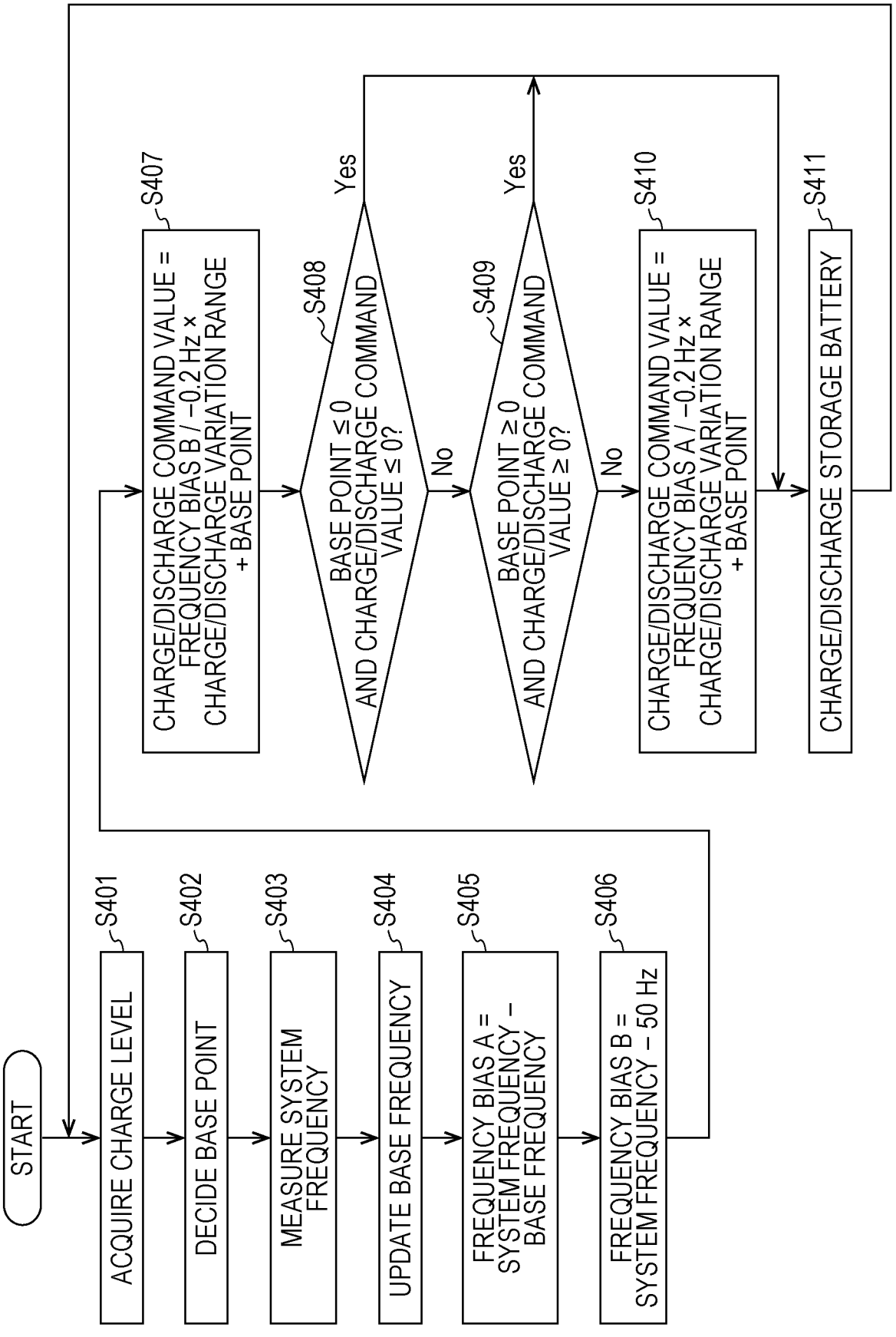
START
S401
ACQUIRE CHARGE LEVEL
S402
DECIDE BASE POINT
S403
MEASURE SYSTEM FREQUENCY
S404
UPDATE BASE FREQUENCY
S405
FREQUENCY BIAS A = SYSTEM FREQUENCY − BASE FREQUENCY
S406
FREQUENCY BIAS B = SYSTEM FREQUENCY − 50 Hz
S407
CHARGE/DISCHARGE COMMAND VALUE = FREQUENCY BIAS B / −0.2 Hz × CHARGE/DISCHARGE VARIATION RANGE + BASE POINT
S408
BASE POINT ≤ 0 AND CHARGE/DISCHARGE COMMAND VALUE ≤ 0?
Yes
No
S409
BASE POINT ≥ 0 AND CHARGE/DISCHARGE COMMAND VALUE ≥ 0?
Yes
No
S410
CHARGE/DISCHARGE COMMAND VALUE = FREQUENCY BIAS A / −0.2 Hz × CHARGE/DISCHARGE VARIATION RANGE + BASE POINT
S411
CHARGE/DISCHARGE STORAGE BATTERY

FIG. 13

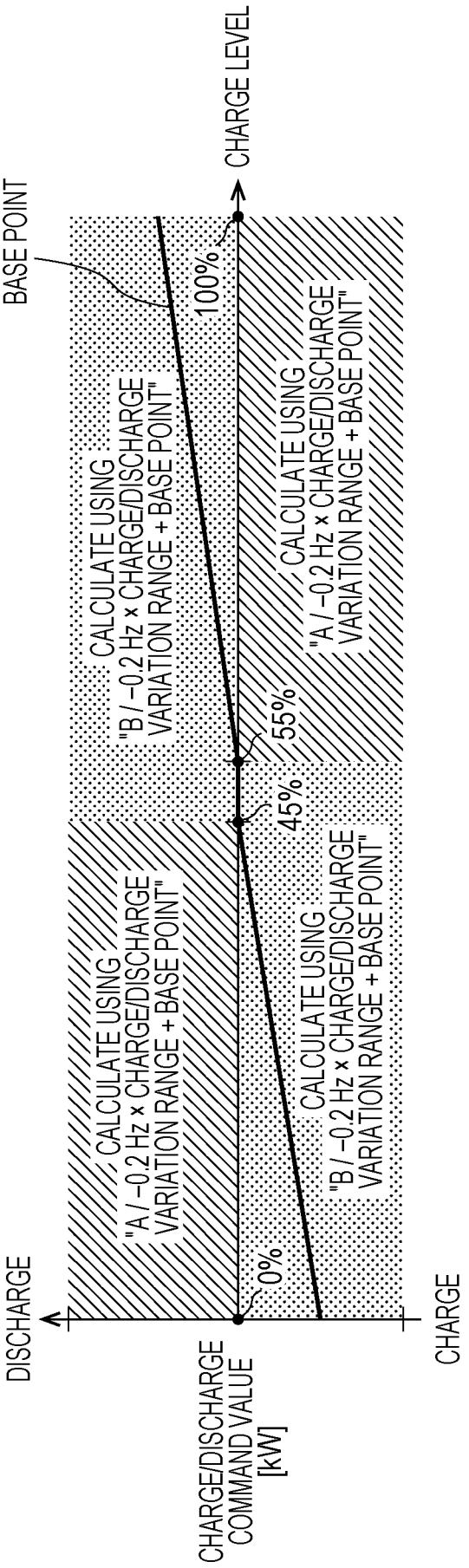
CHARGE LEVEL
BASE POINT
100%
55%
45%
0%
CALCULATE USING
"B / −0.2 Hz × CHARGE/DISCHARGE
VARIATION RANGE + BASE POINT"
CALCULATE USING
"A / −0.2 Hz × CHARGE/DISCHARGE
VARIATION RANGE + BASE POINT"
CALCULATE USING
"A / −0.2 Hz × CHARGE/DISCHARGE
VARIATION RANGE + BASE POINT"
CALCULATE USING
"B / −0.2 Hz × CHARGE/DISCHARGE
VARIATION RANGE + BASE POINT"
DISCHARGE
CHARGE
CHARGE/DISCHARGE
COMMAND VALUE
[kW]

FIG. 14

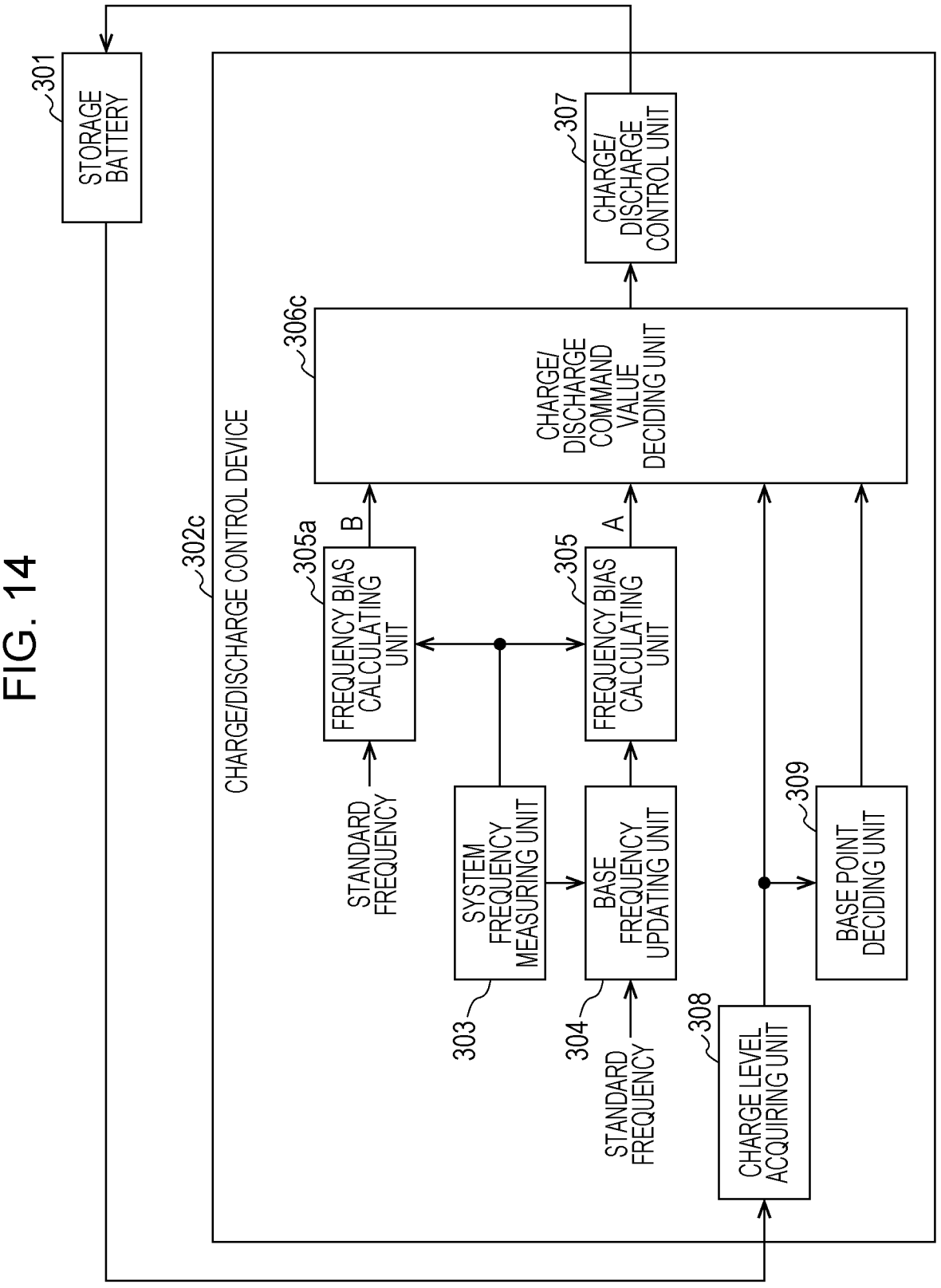
301
STORAGE BATTERY
307
CHARGE/ DISCHARGE CONTROL UNIT
306c
CHARGE/ DISCHARGE COMMAND VALUE DECIDING UNIT
302c
CHARGE/DISCHARGE CONTROL DEVICE
305a
B
FREQUENCY BIAS CALCULATING UNIT
305
A
FREQUENCY BIAS CALCULATING UNIT
STANDARD FREQUENCY
SYSTEM FREQUENCY MEASURING UNIT
BASE FREQUENCY UPDATING UNIT
309
BASE POINT DECIDING UNIT
303
304
STANDARD FREQUENCY
308
CHARGE LEVEL ACQUIRING UNIT

FIG. 15

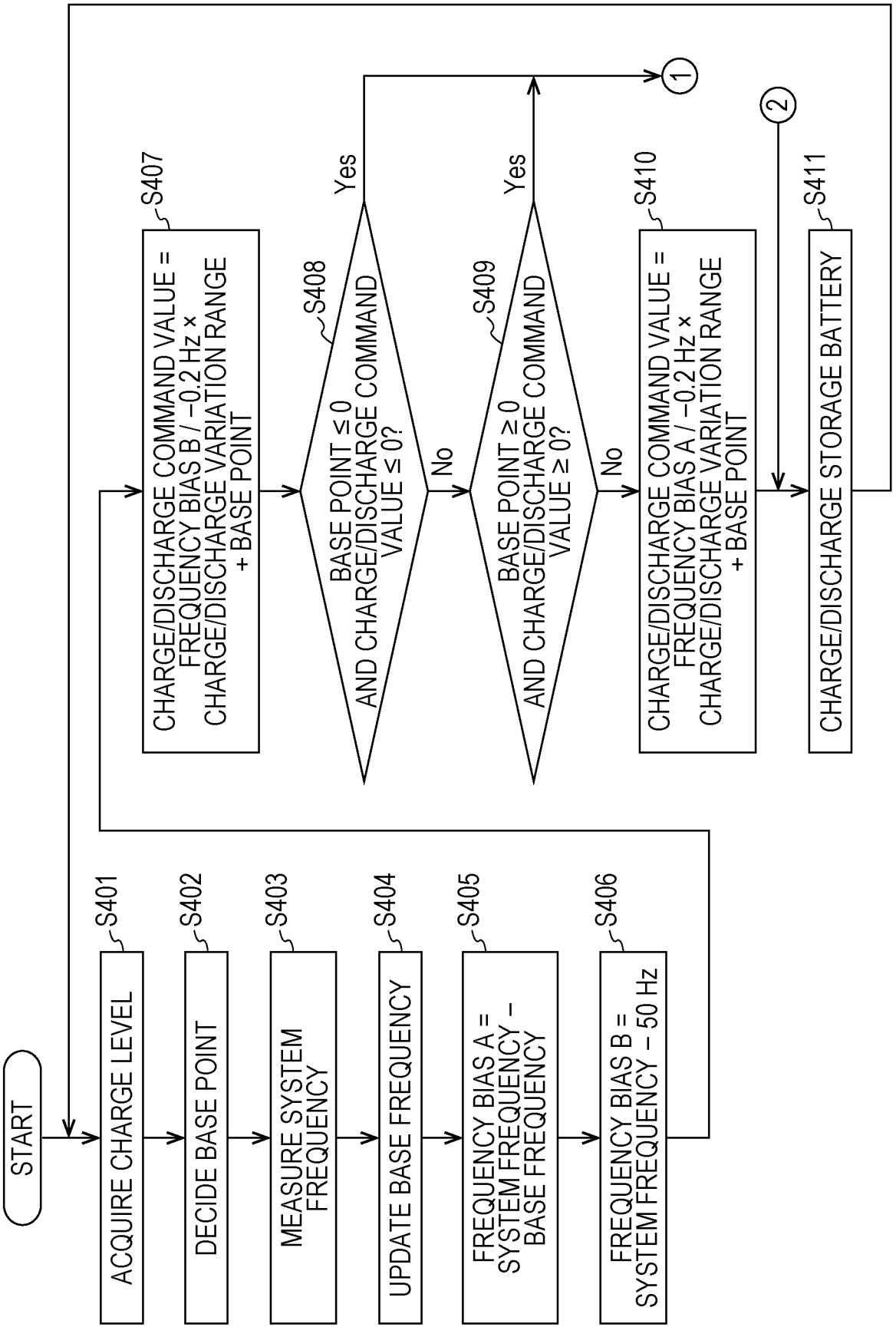
START
S401
ACQUIRE CHARGE LEVEL
S402
DECIDE BASE POINT
S403
MEASURE SYSTEM FREQUENCY
S404
UPDATE BASE FREQUENCY
S405
FREQUENCY BIAS A = SYSTEM FREQUENCY − BASE FREQUENCY
S406
FREQUENCY BIAS B = SYSTEM FREQUENCY − 50 Hz
S407
CHARGE/DISCHARGE COMMAND VALUE = FREQUENCY BIAS B / −0.2 Hz × CHARGE/DISCHARGE VARIATION RANGE + BASE POINT
S408
BASE POINT ≤ 0 AND CHARGE/DISCHARGE COMMAND VALUE ≤ 0?
Yes
No
S409
BASE POINT ≥ 0 AND CHARGE/DISCHARGE COMMAND VALUE ≥ 0?
Yes
No
S410
CHARGE/DISCHARGE COMMAND VALUE = FREQUENCY BIAS A / −0.2 Hz × CHARGE/DISCHARGE VARIATION RANGE + BASE POINT
S411
CHARGE/DISCHARGE STORAGE BATTERY
1
2

FIG. 16

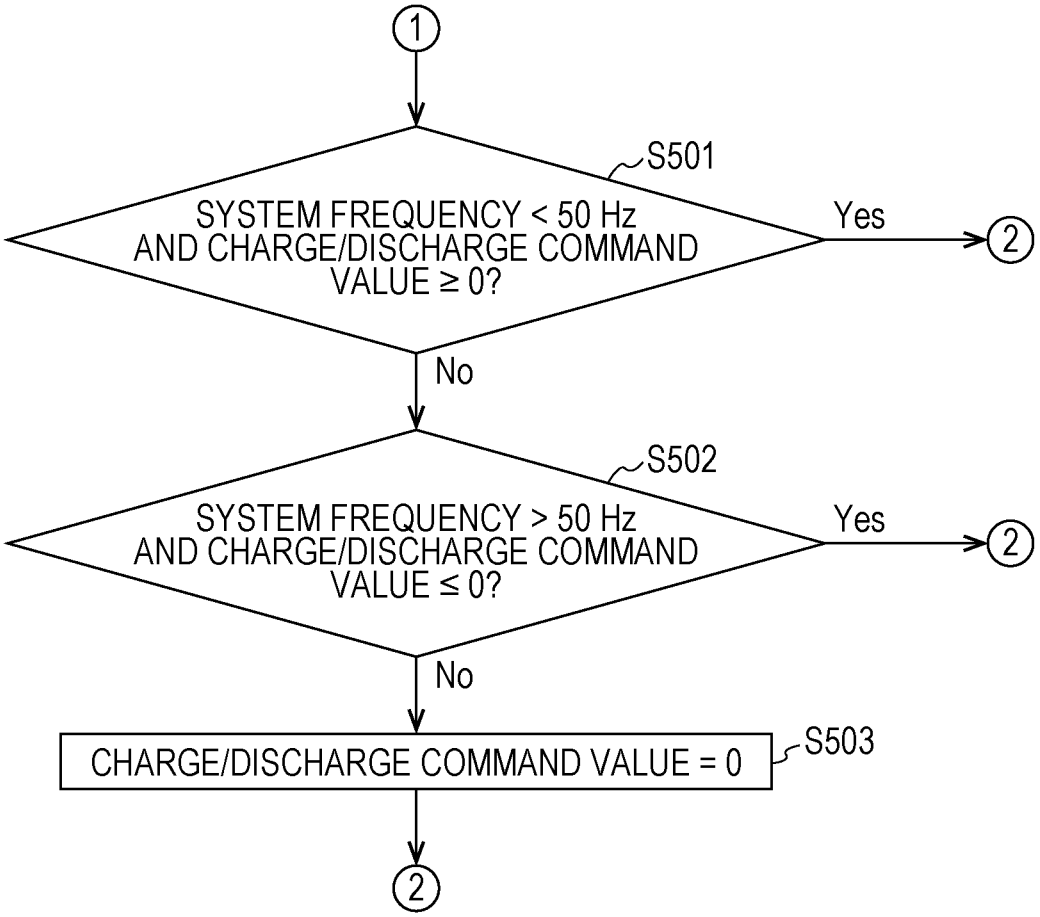
1
S501
SYSTEM FREQUENCY < 50 Hz
AND CHARGE/DISCHARGE COMMAND
VALUE ≥ 0?
Yes
2
No
S502
SYSTEM FREQUENCY > 50 Hz
AND CHARGE/DISCHARGE COMMAND
VALUE ≤ 0?
Yes
2
No
CHARGE/DISCHARGE COMMAND VALUE = 0
S503
2

FIG. 17

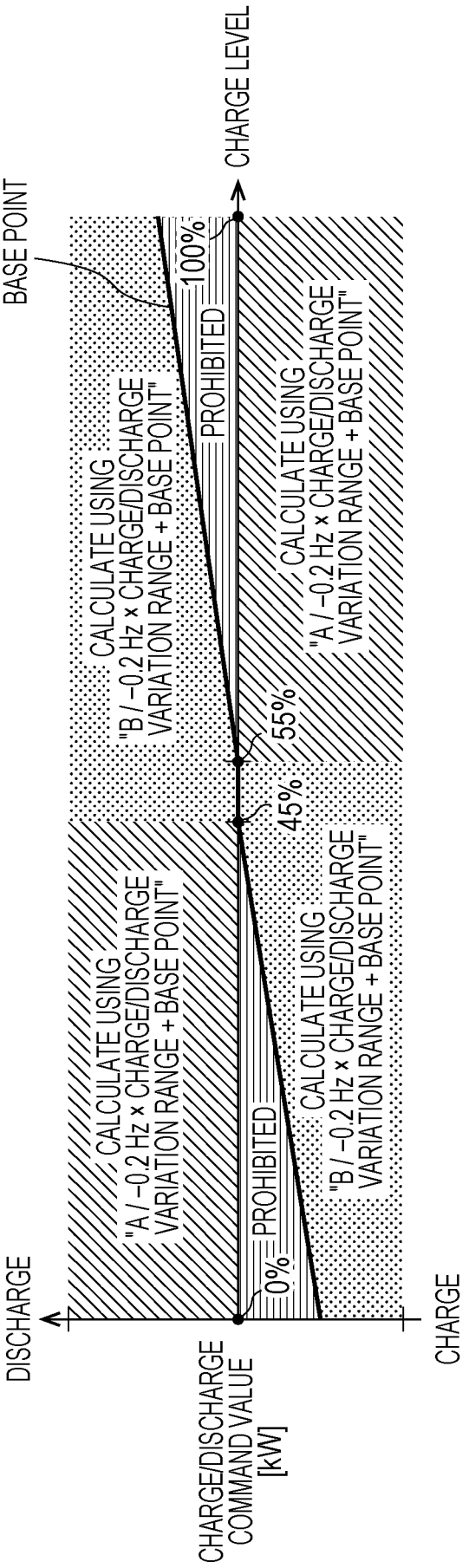
CHARGE LEVEL
BASE POINT
100%
55%
45%
0%
PROHIBITED
PROHIBITED
CALCULATE USING
"B / −0.2 Hz × CHARGE/DISCHARGE
VARIATION RANGE + BASE POINT"
CALCULATE USING
"A / −0.2 Hz × CHARGE/DISCHARGE
VARIATION RANGE + BASE POINT"
CALCULATE USING
"A / −0.2 Hz × CHARGE/DISCHARGE
VARIATION RANGE + BASE POINT"
CALCULATE USING
"B / −0.2 Hz × CHARGE/DISCHARGE
VARIATION RANGE + BASE POINT"
DISCHARGE
CHARGE
CHARGE/DISCHARGE
COMMAND VALUE
[kW]

FIG. 18

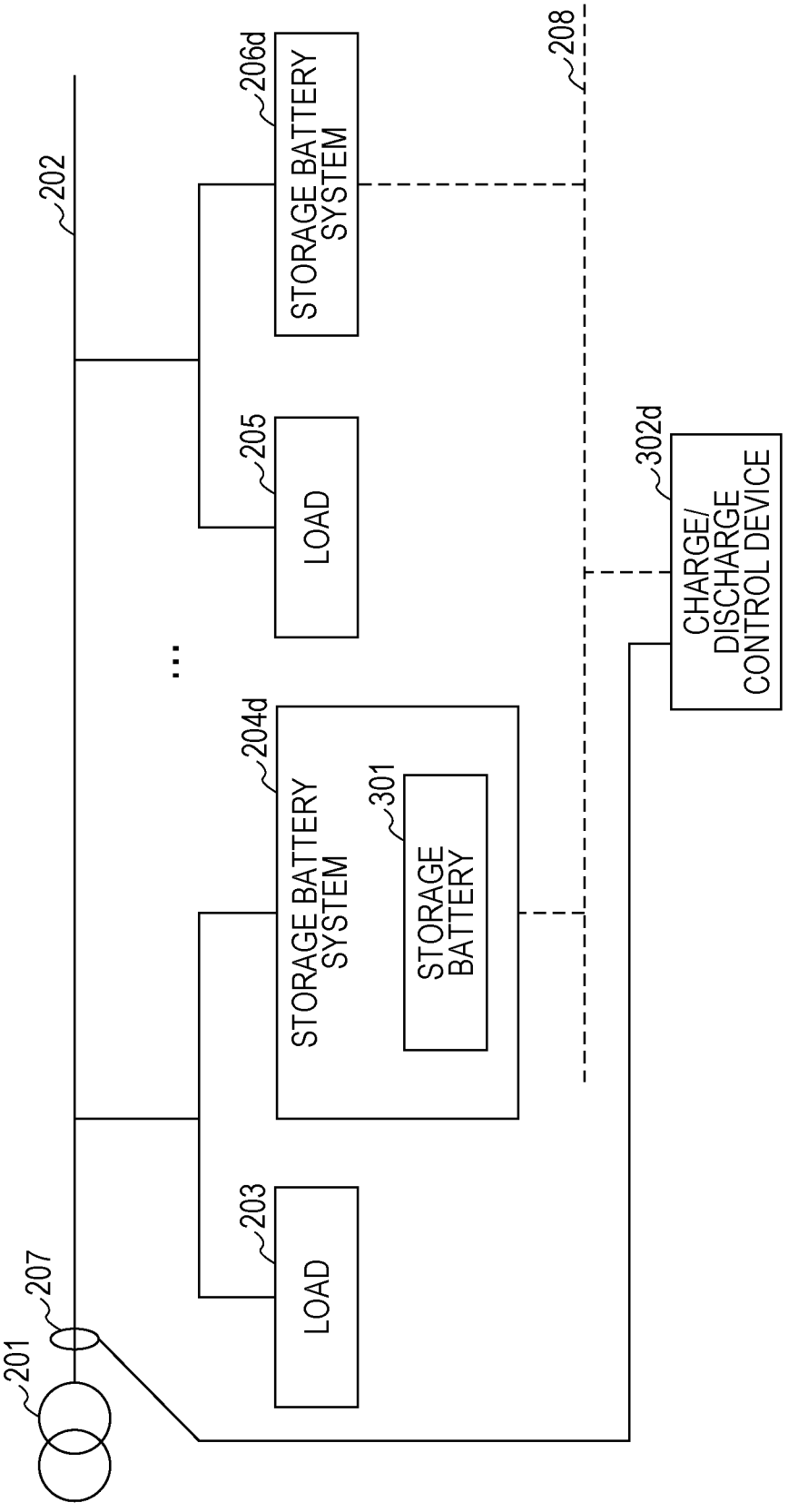
201
207
202
203
LOAD
204d
STORAGE BATTERY SYSTEM
301
STORAGE BATTERY
205
LOAD
206d
STORAGE BATTERY SYSTEM
208
302d
CHARGE/ DISCHARGE CONTROL DEVICE

FIG. 19

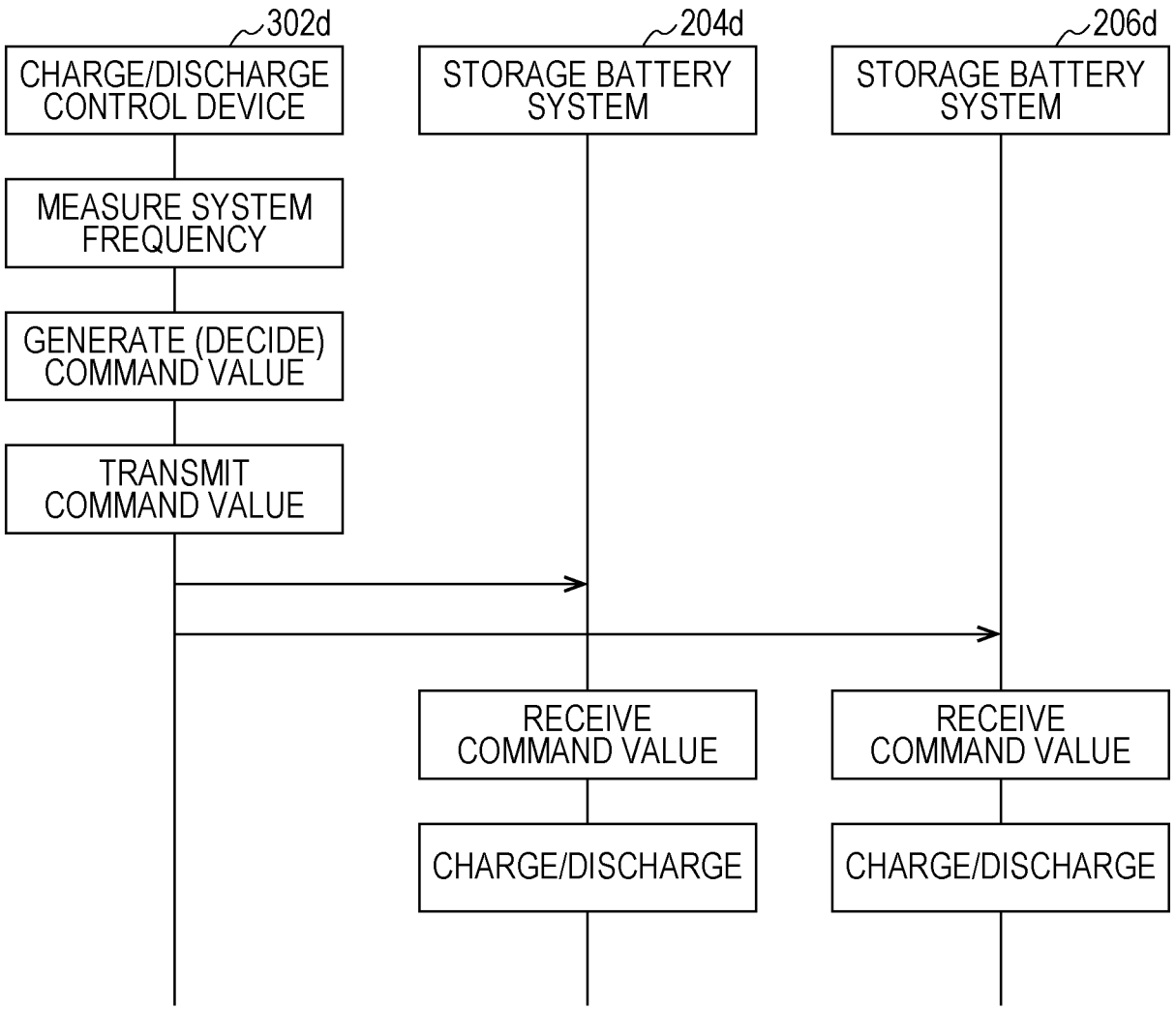
302d
CHARGE/DISCHARGE CONTROL DEVICE
204d
STORAGE BATTERY SYSTEM
206d
STORAGE BATTERY SYSTEM
MEASURE SYSTEM FREQUENCY
GENERATE (DECIDE) COMMAND VALUE
TRANSMIT COMMAND VALUE
RECEIVE COMMAND VALUE
RECEIVE COMMAND VALUE
CHARGE/DISCHARGE
CHARGE/DISCHARGE