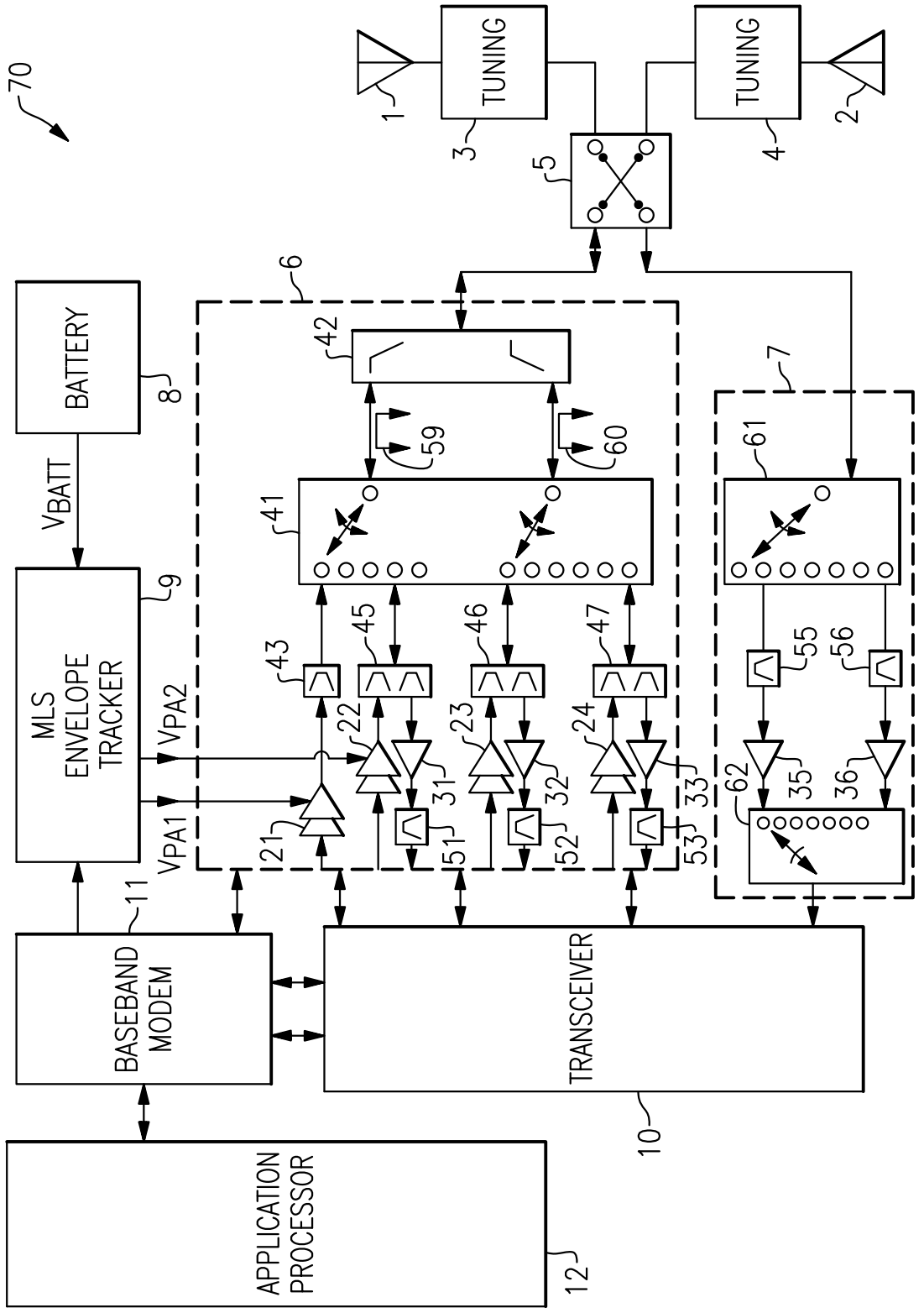
70
1
TUNING
3
5
TUNING
4
2
6
42
7
BATTERY
8
59
60
61
VBATT
41
MLS
ENVELOPE
TRACKER
9
43
45
46
47
55
56
VPA2
22
23
24
VPA1
21
31
32
33
35
36
62
51
52
53
11
BASEBAND
MODEM
TRANSCEIVER
10
APPLICATION
PROCESSOR
12

FIG.1

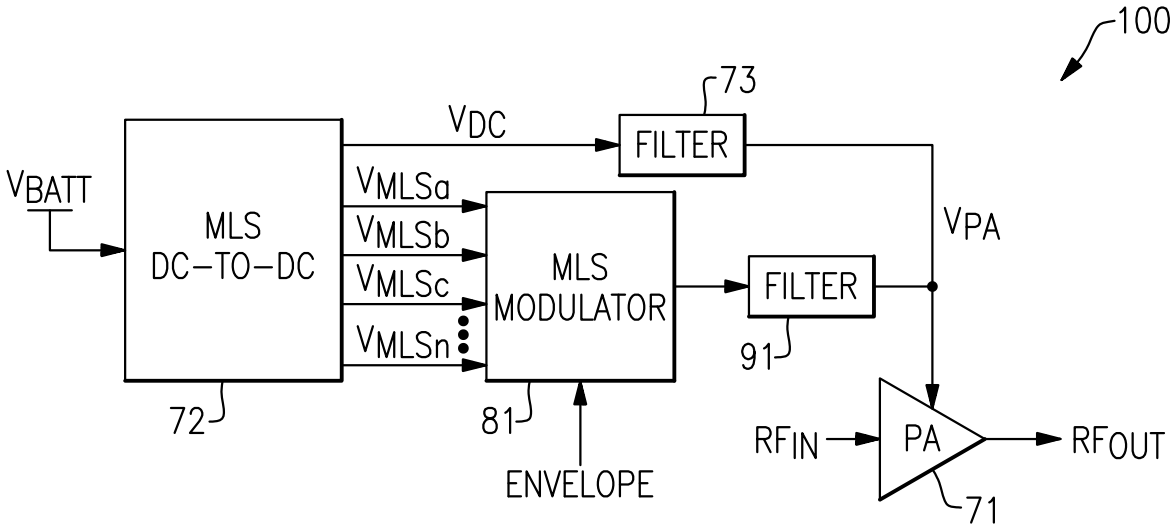
100
73
VDC
FILTER
VBATT
MLS
DC–TO–DC
VMLSa
VMLSb
VMLSc
VMLSn
MLS
MODULATOR
FILTER
VPA
91
72
81
ENVELOPE
RFIN
PA
RFOUT
71

FIG.2

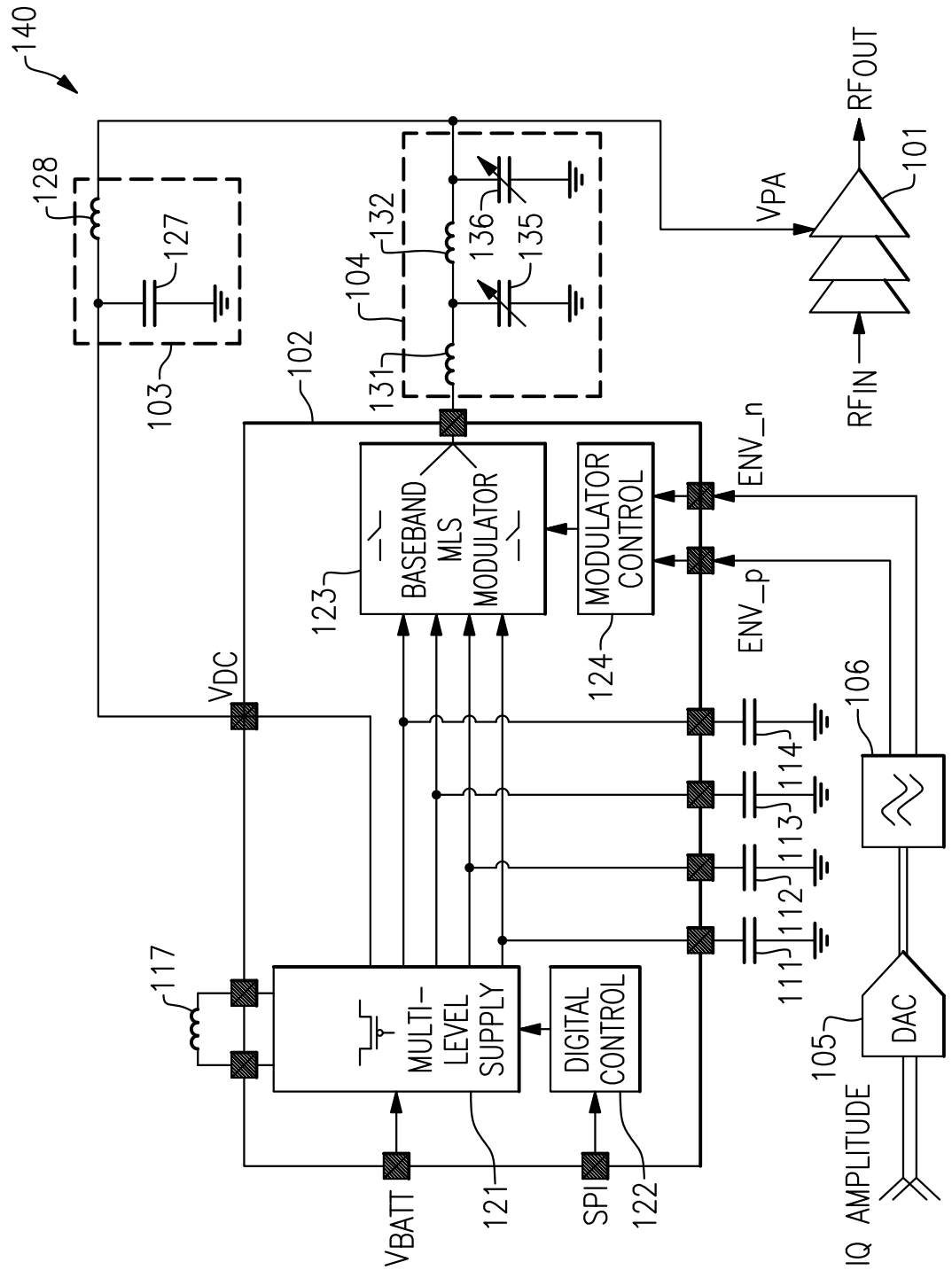
140
128
127
103
102
104
132
136
135
131
VPA
RFOUT
101
RFIN
ENV_n
ENV_p
123
BASEBAND MLS MODULATOR
MODULATOR CONTROL
124
VDC
106
114
113
112
111
117
MULTI-LEVEL SUPPLY
DIGITAL CONTROL
105
DAC
VBATT
121
SPI
122
IQ AMPLITUDE

FIG.3A

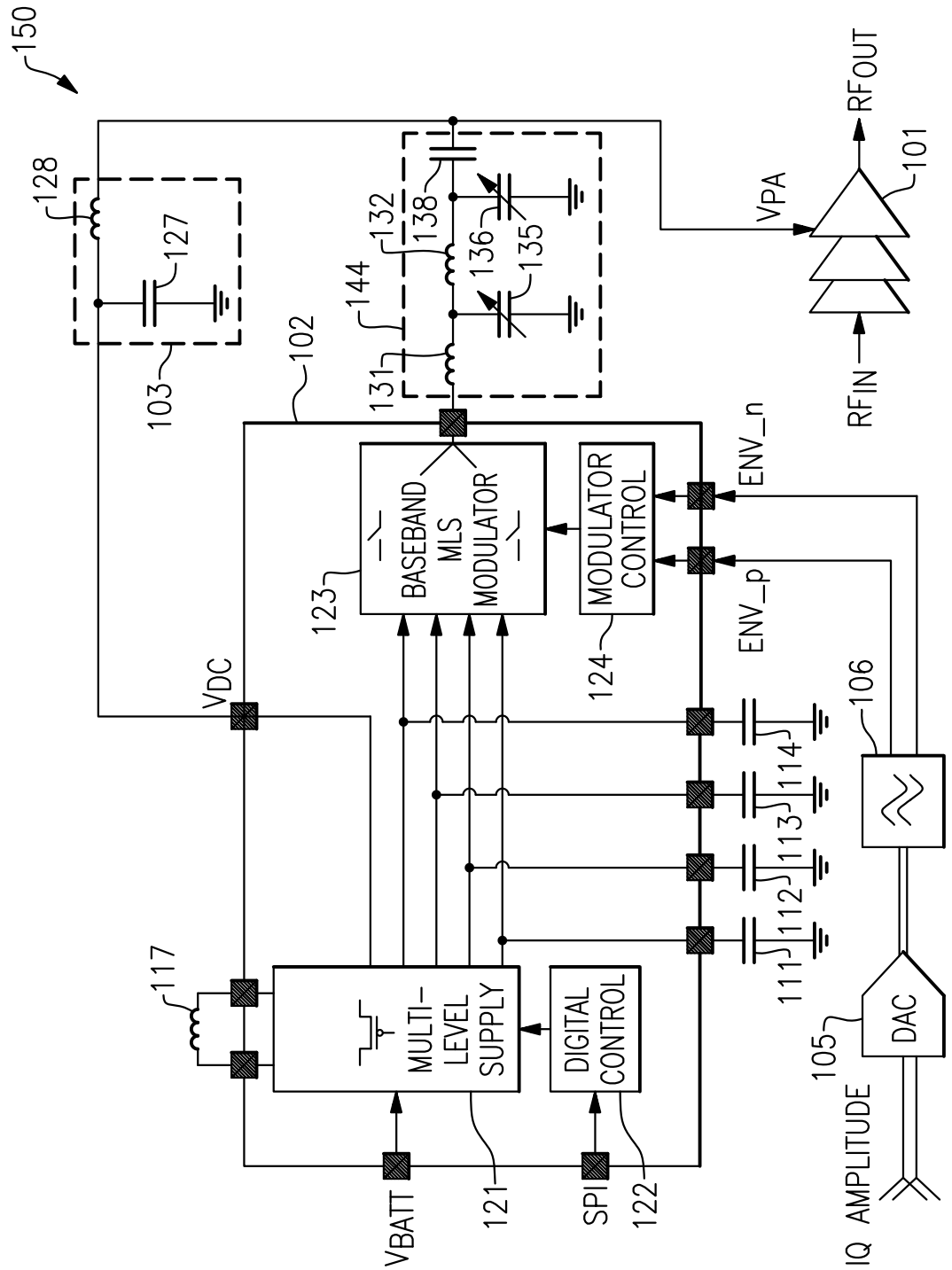
150
128
127
103
102
131
144
132
138
136
135
VPA
101
RFOUT
RFIN
ENV_n
ENV_p
123
BASEBAND MLS MODULATOR
124
MODULATOR CONTROL
VDC
106
114
113
112
111
117
MULTI-LEVEL SUPPLY
DIGITAL CONTROL
105
DAC
VBATT
121
SPI
122
IQ AMPLITUDE

FIG.3B

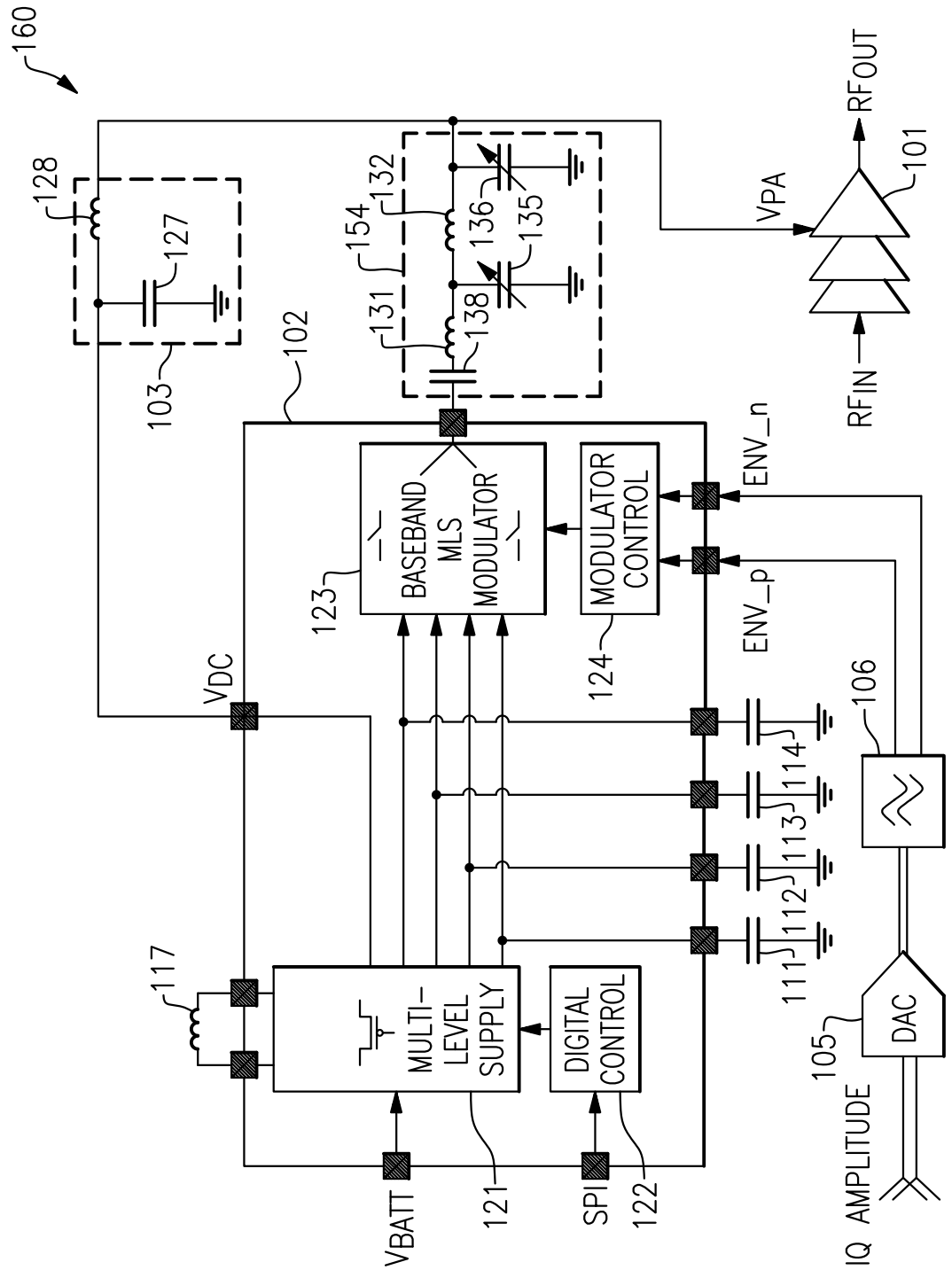
160
128
127
103
102
154
132
136
135
131
138
VPA
RFOUT
101
RFIN
ENV_n
ENV_p
BASEBAND MLS MODULATOR
123
MODULATOR CONTROL
124
VDC
106
114
113
112
111
117
MULTI-LEVEL SUPPLY
DIGITAL CONTROL
105
DAC
VBATT
121
SPI
122
IQ AMPLITUDE

FIG.3C

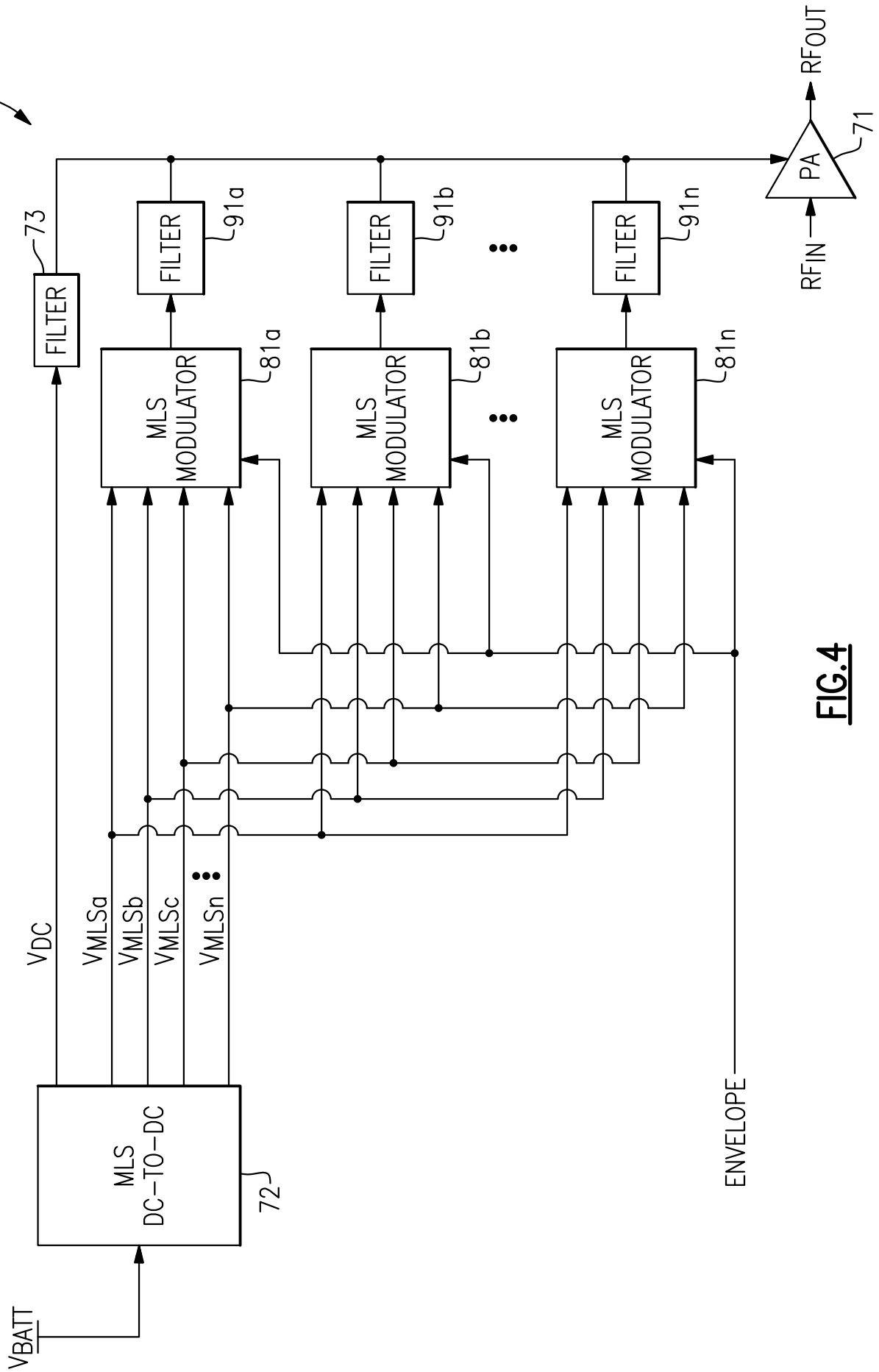
170
RFOUT
PA
71
RFIN
73
FILTER
91a
91b
91n
MLS MODULATOR
81a
81b
81n
VDC
VMLSa
VMLSb
VMLSc
VMLSn
ENVELOPE
MLS DC-TO-DC
72
VBATT

FIG.4

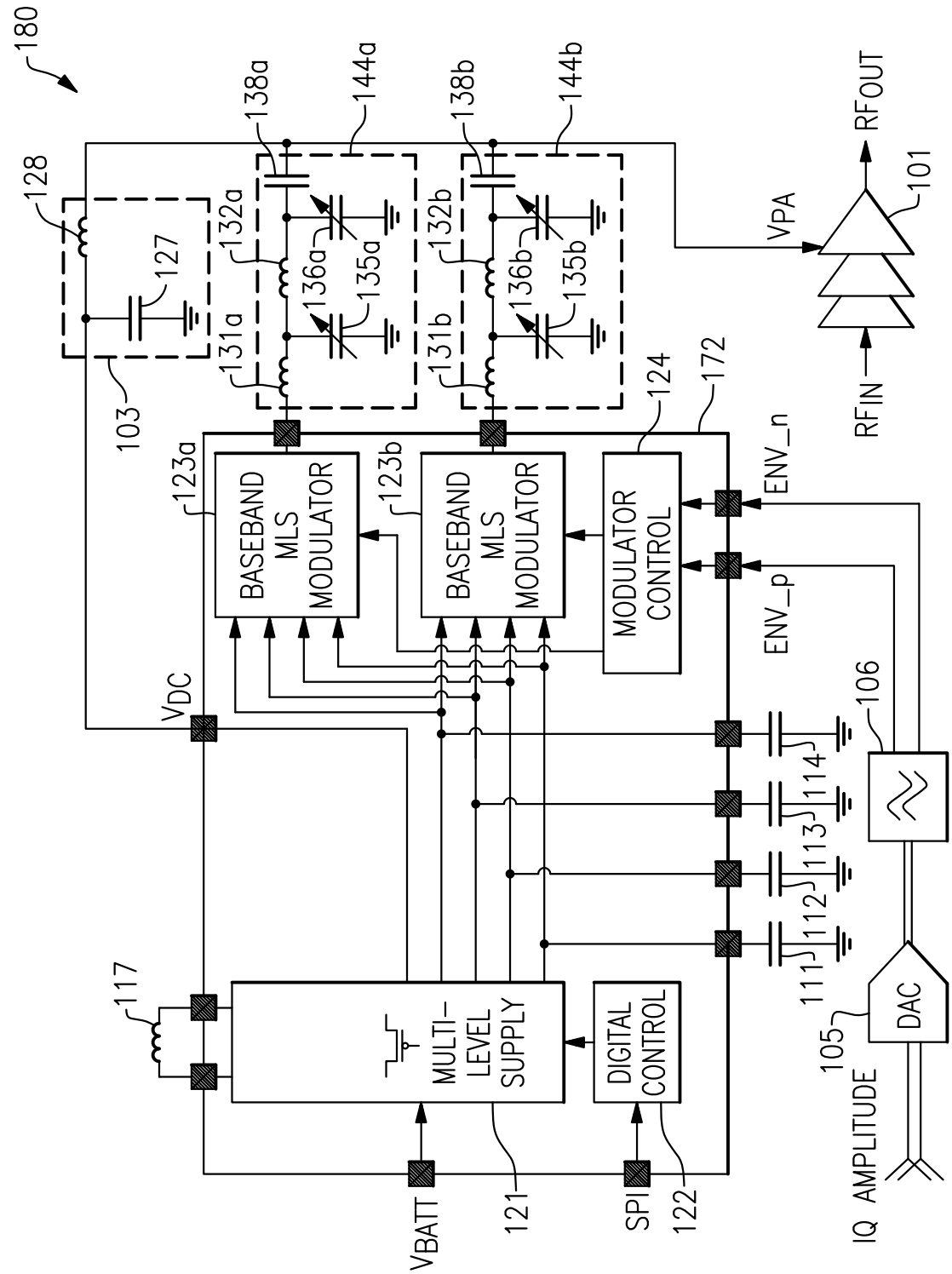
180
128
127
103
131a
132a
136a
135a
138a
144a
131b
132b
136b
135b
138b
144b
VPA
101
RFOUT
RFIN
124
172
123a
123b
BASEBAND MLS MODULATOR
BASEBAND MLS MODULATOR
MODULATOR CONTROL
ENV_n
ENV_p
VDC
106
114
113
112
111
117
MULTI-LEVEL SUPPLY
DIGITAL CONTROL
105
DAC
IQ AMPLITUDE
VBATT
121
SPI
122

FIG.5

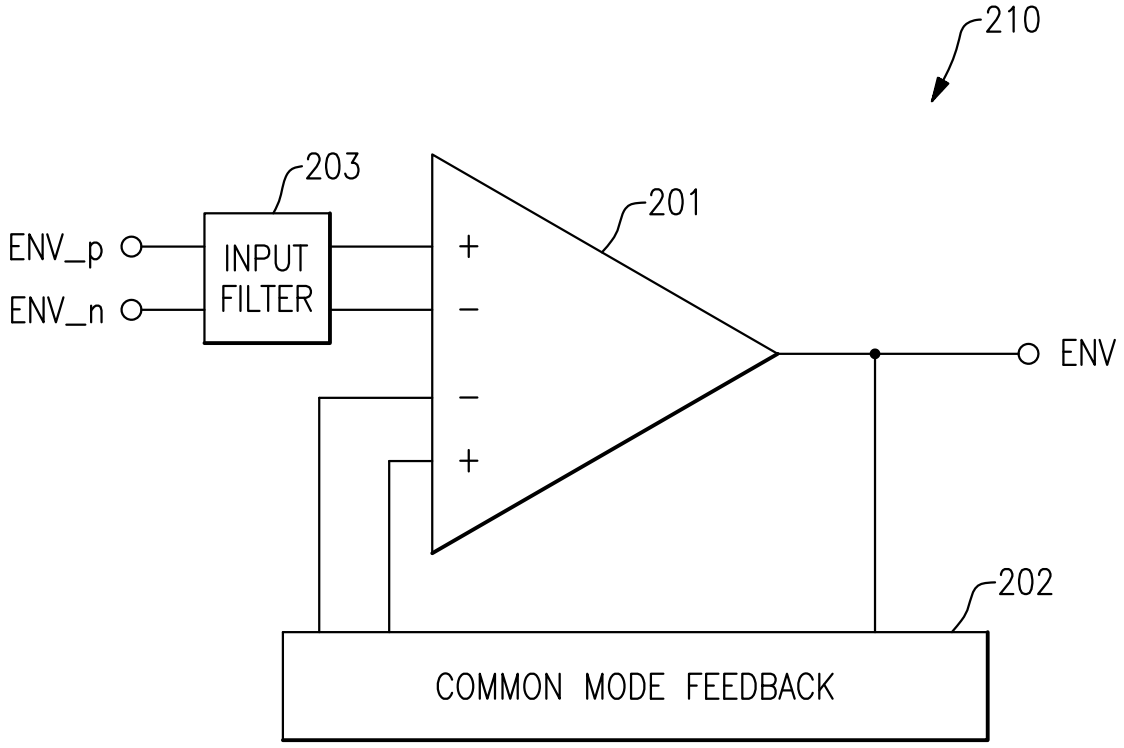
210
203
201
ENV_p
ENV_n
INPUT
FILTER
+
−
−
+
ENV
202
COMMON MODE FEEDBACK

FIG.6A

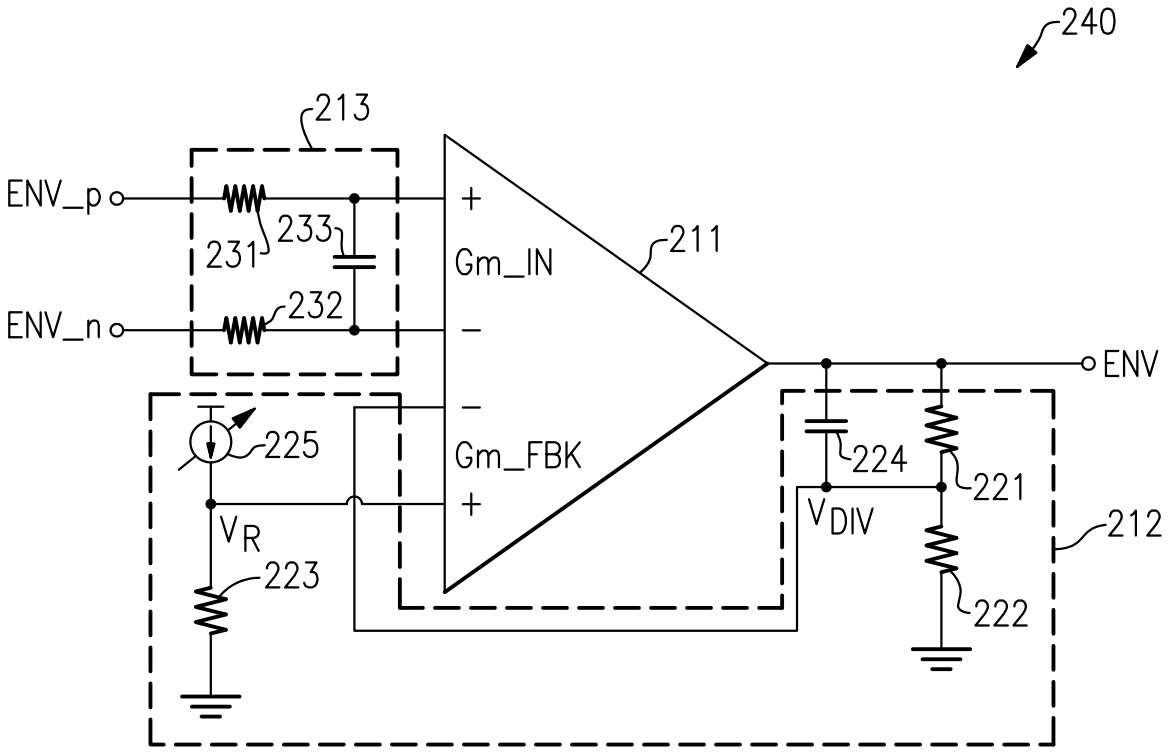
240
213
ENV_p
ENV_n
231
233
232
+
Gm_IN
−
211
ENV
−
Gm_FBK
+
225
224
221
V_R
V_{DIV}
212
223
222

FIG.6B

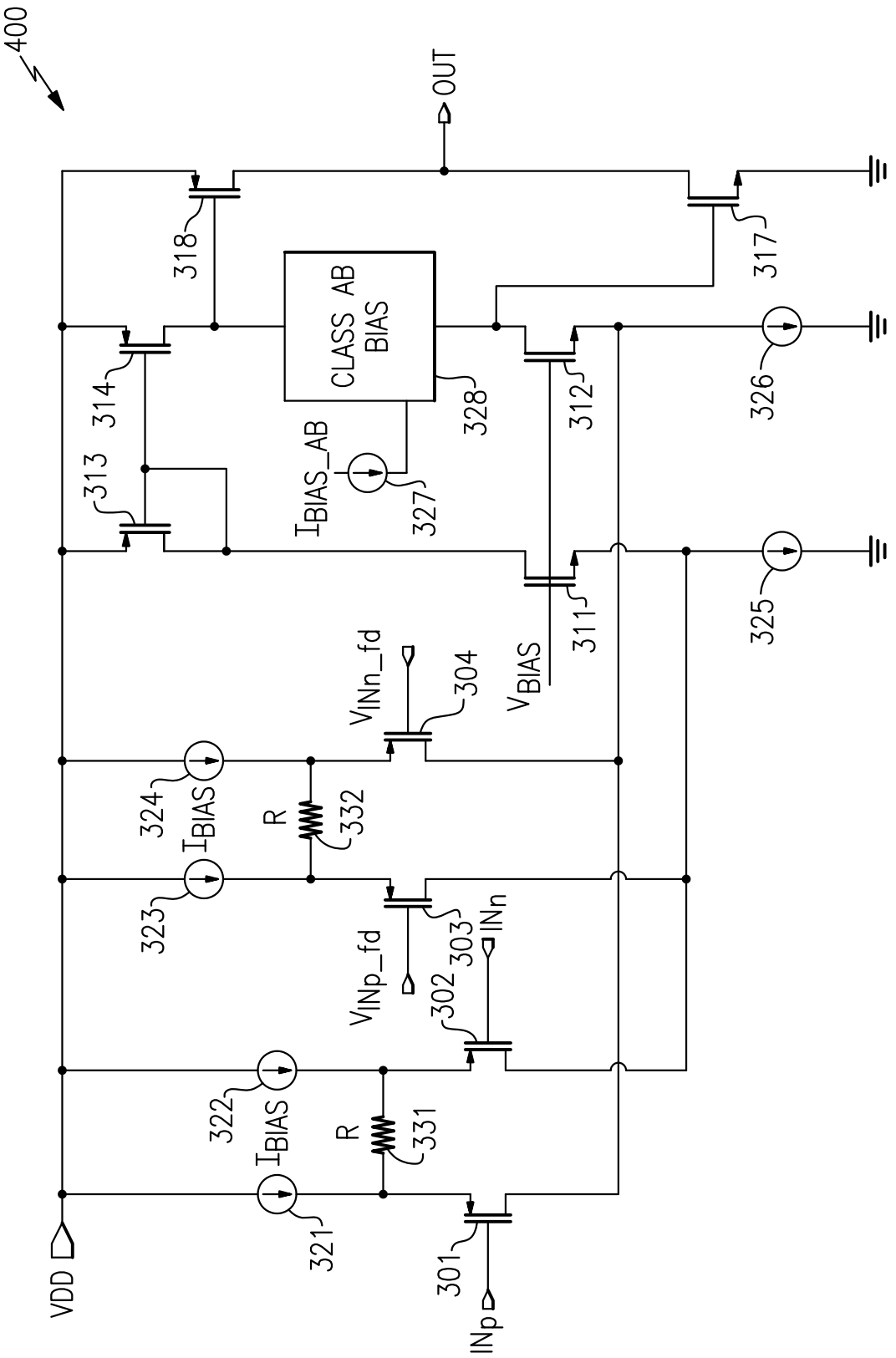
400
OUT
318
317
CLASS AB BIAS
328
314
313
312
326
327
I_{BIAS_AB}
325
311
V_{BIAS}
V_{INn_fd}
304
324
I_{BIAS}
R
332
323
V_{INp_fd}
303
INn
302
322
I_{BIAS}
R
331
321
301
VDD
INp

FIG.7

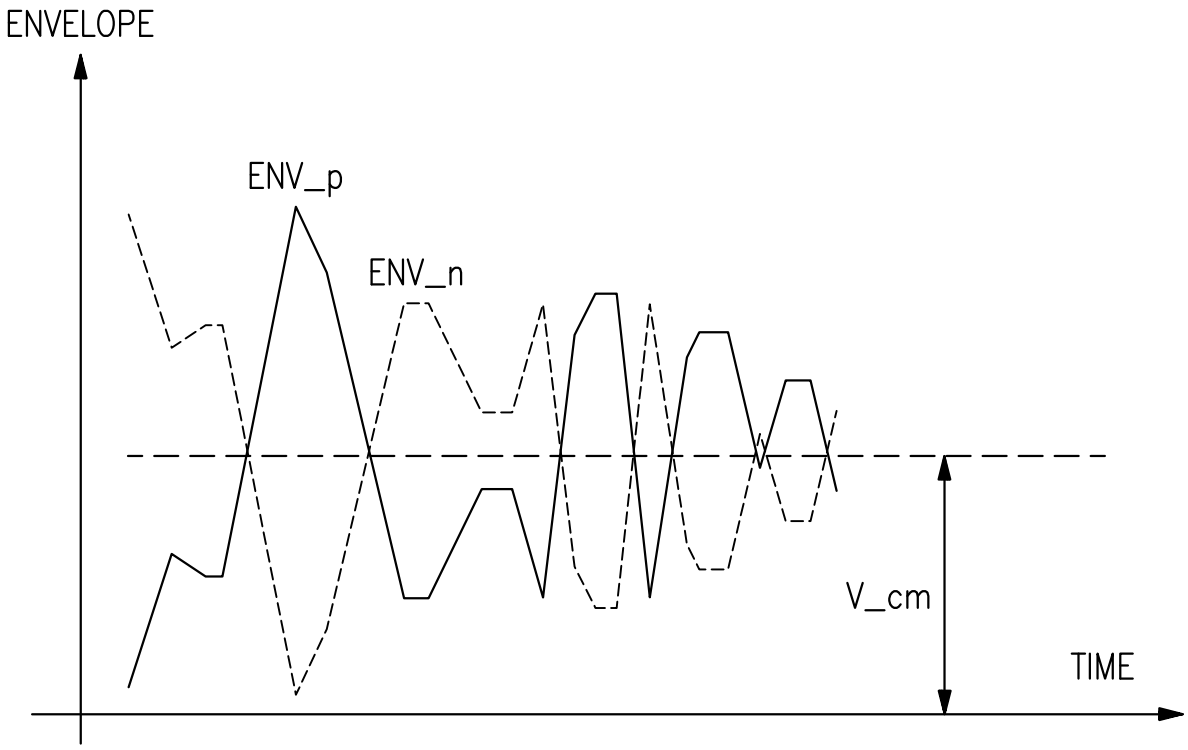

FIG.8

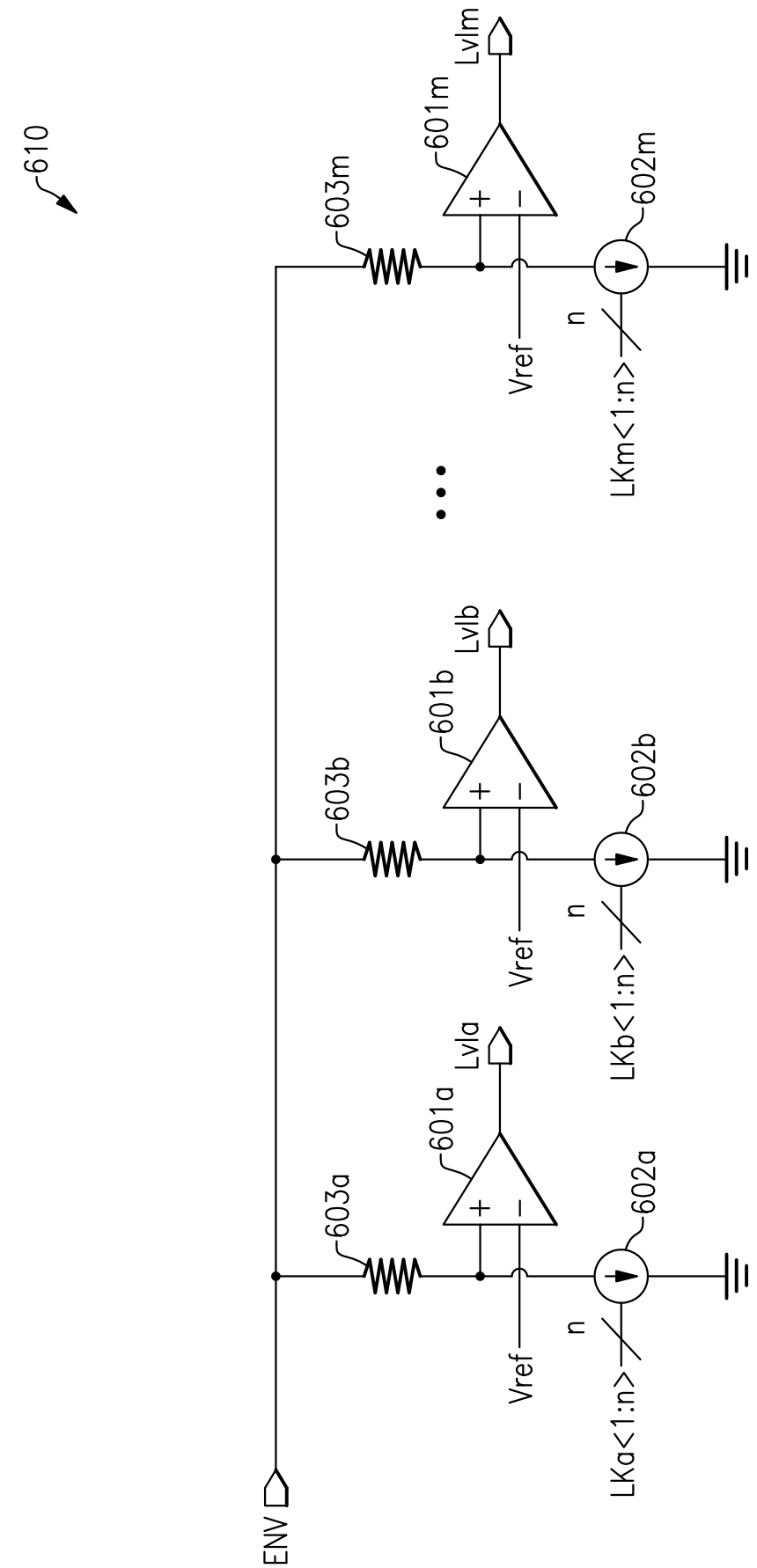
610
ENV
603a
603b
603m
601a
601b
601m
Lvla
Lvlb
Lvlm
Vref
Vref
Vref
n
n
n
LKa<1:n>
LKb<1:n>
LKm<1:n>
602a
602b
602m

FIG.9

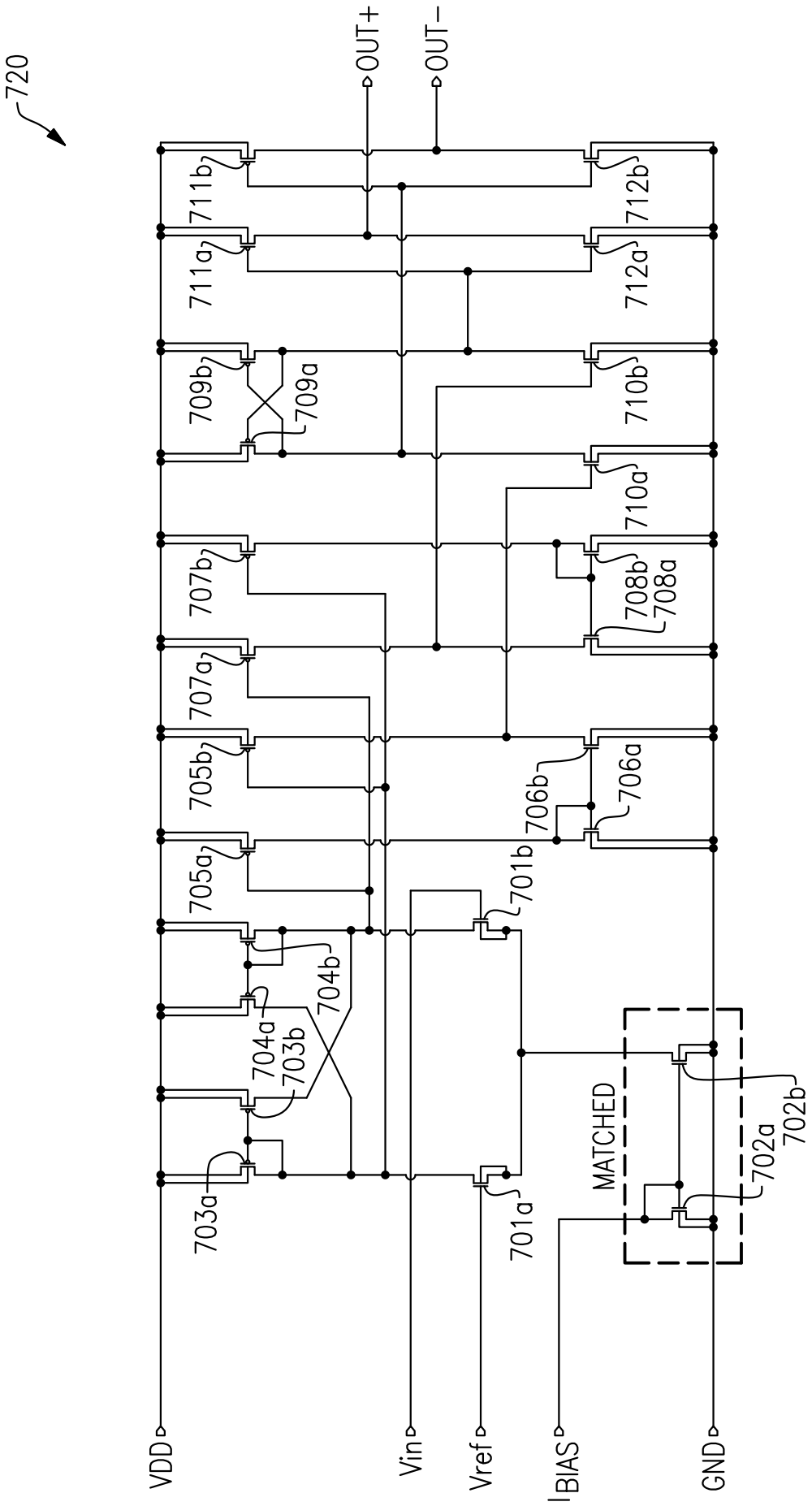
720
OUT+
OUT−
711b
711a
712b
712a
709b
709a
710b
710a
707b
707a
708b
708a
705b
705a
706b
706a
701b
704b
704a
703b
703a
701a
MATCHED
702a
702b
VDD
Vin
Vref
IBIAS
GND

FIG.10

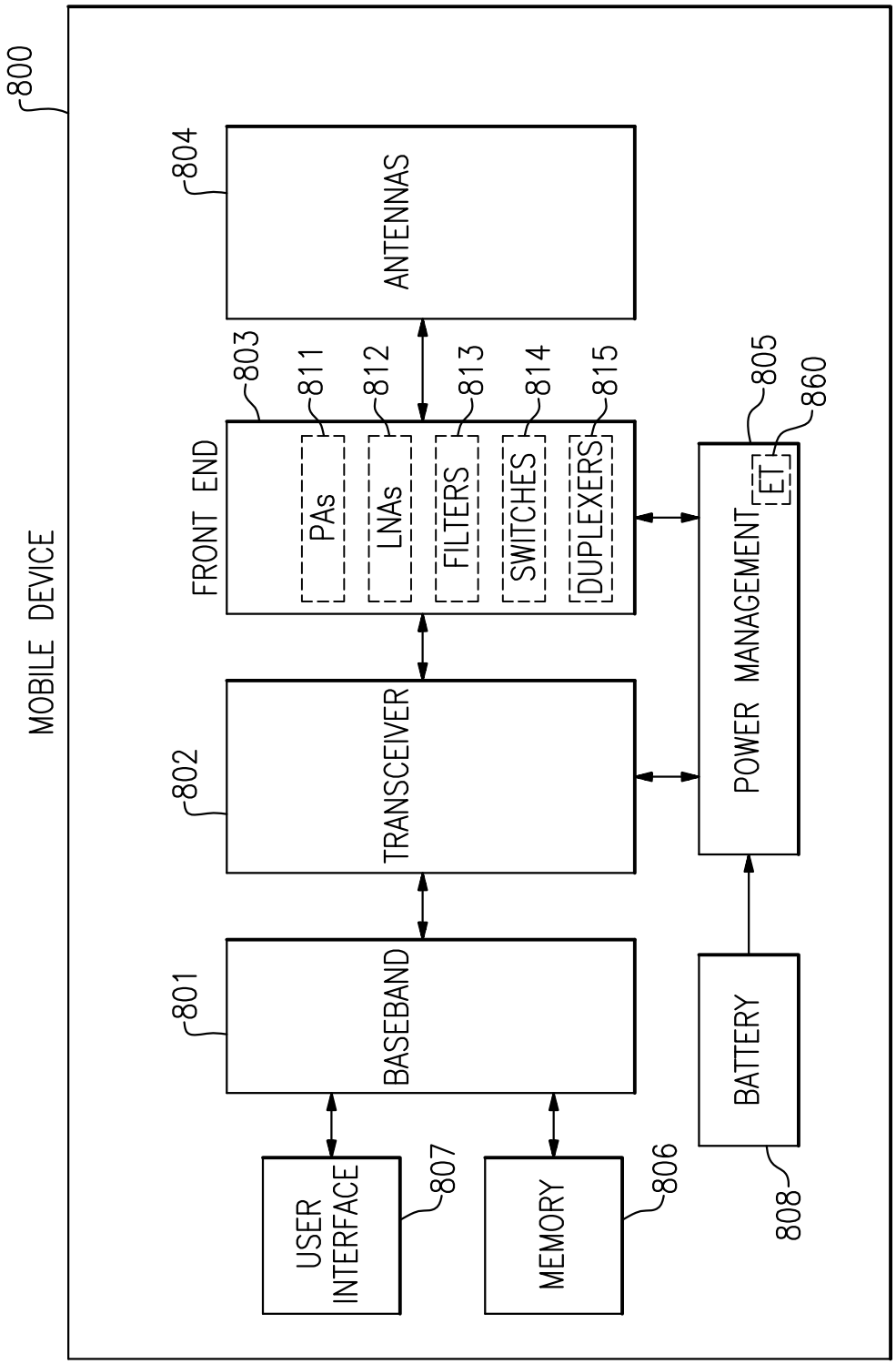
800
MOBILE DEVICE
804
ANTENNAS
803
811
812
813
814
815
FRONT END
PAs
LNAs
FILTERS
SWITCHES
DUPLEXERS
805
860
ET
POWER MANAGEMENT
802
TRANSCEIVER
801
BASEBAND
USER INTERFACE
807
MEMORY
806
BATTERY
808

FIG.11

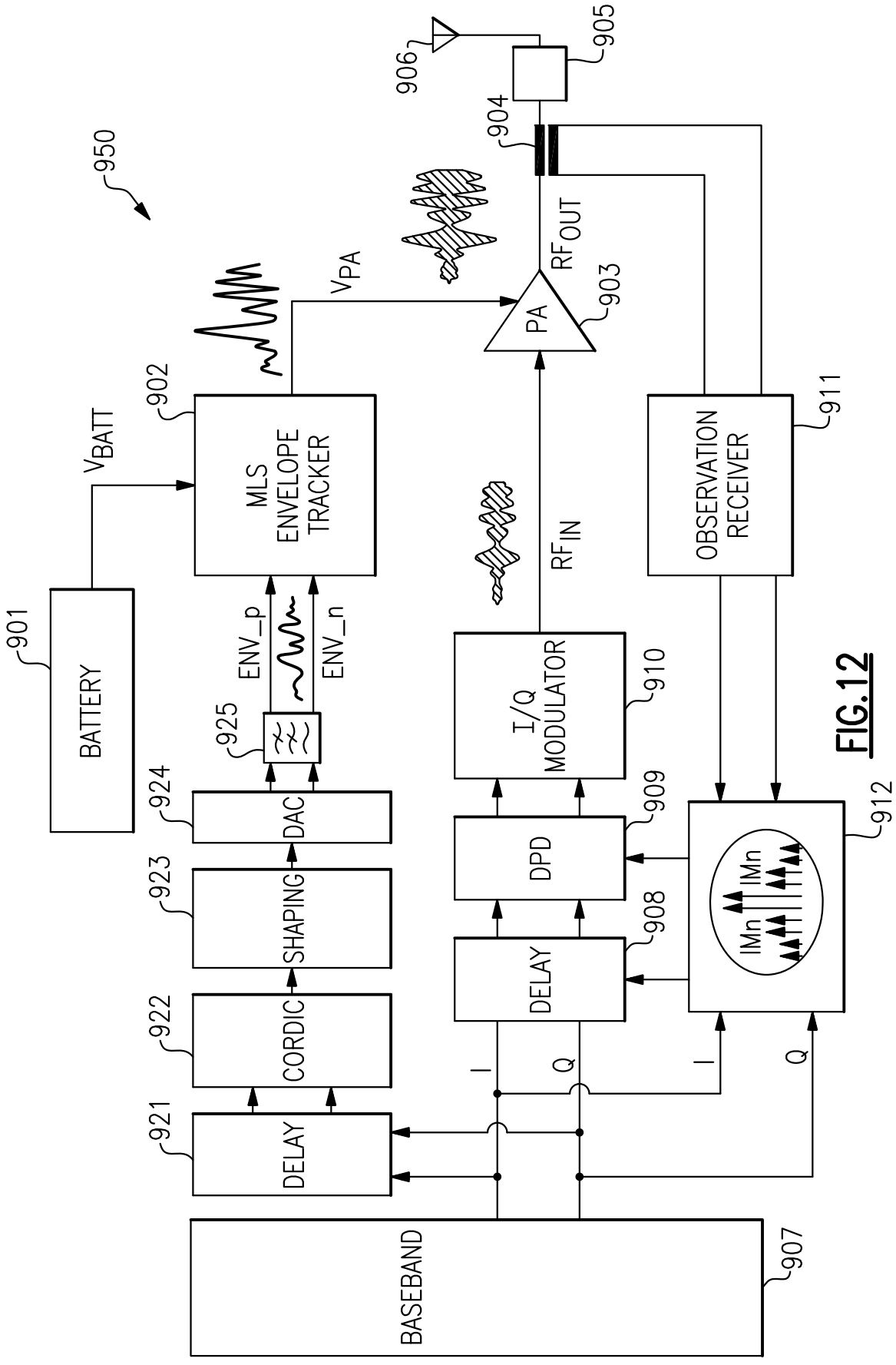
950
906
905
904
903
PA
RF OUT
V PA
902
MLS ENVELOPE TRACKER
V BATT
901
BATTERY
911
OBSERVATION RECEIVER
RF IN
925
ENV_p
ENV_n
924
DAC
923
SHAPING
922
CORDIC
921
DELAY
910
I/Q MODULATOR
909
DPD
908
DELAY
912
IMn
IMn
I
Q
I
Q
907
BASEBAND

FIG.12

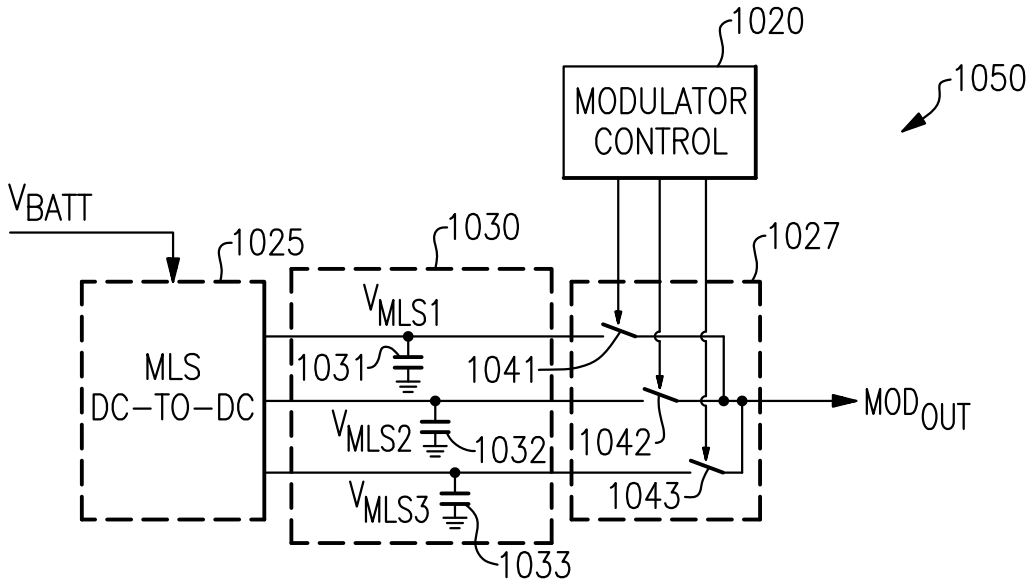
1020
MODULATOR CONTROL
1050
VBATT
1025
1030
1027
MLS DC–TO–DC
VMLS1
1031
1041
VMLS2
1032
1042
MODOUT
VMLS3
1043
1033

FIG.13

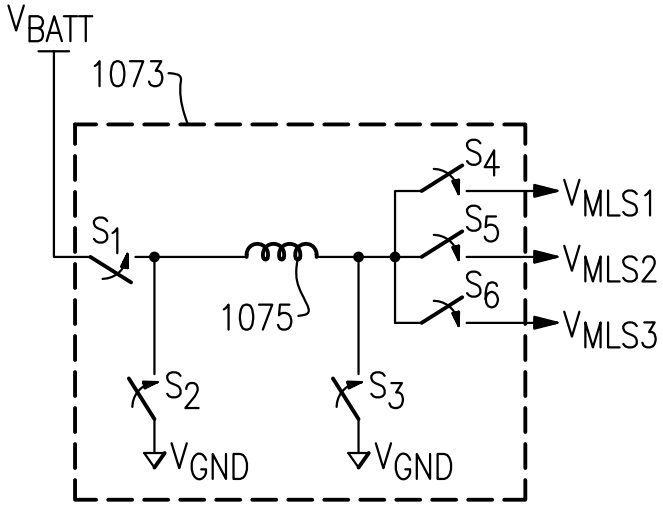
VBATT
1073
S4
VMLS1
S1
S5
VMLS2
1075
S6
VMLS3
S2
S3
VGND
VGND

FIG.14

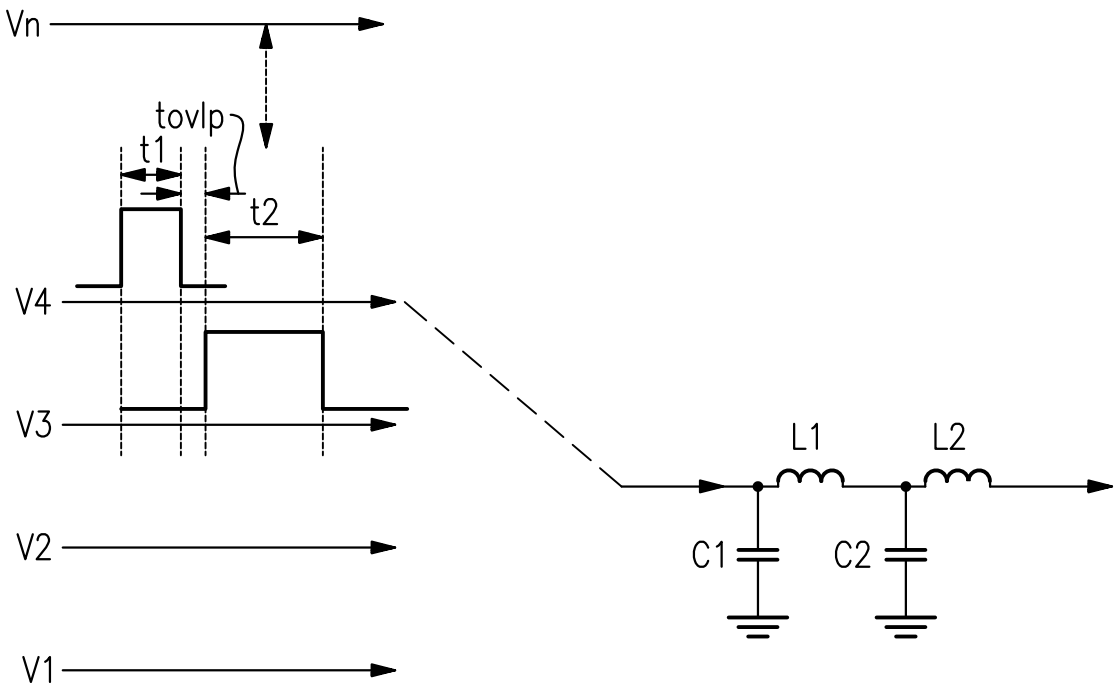

FIG.15

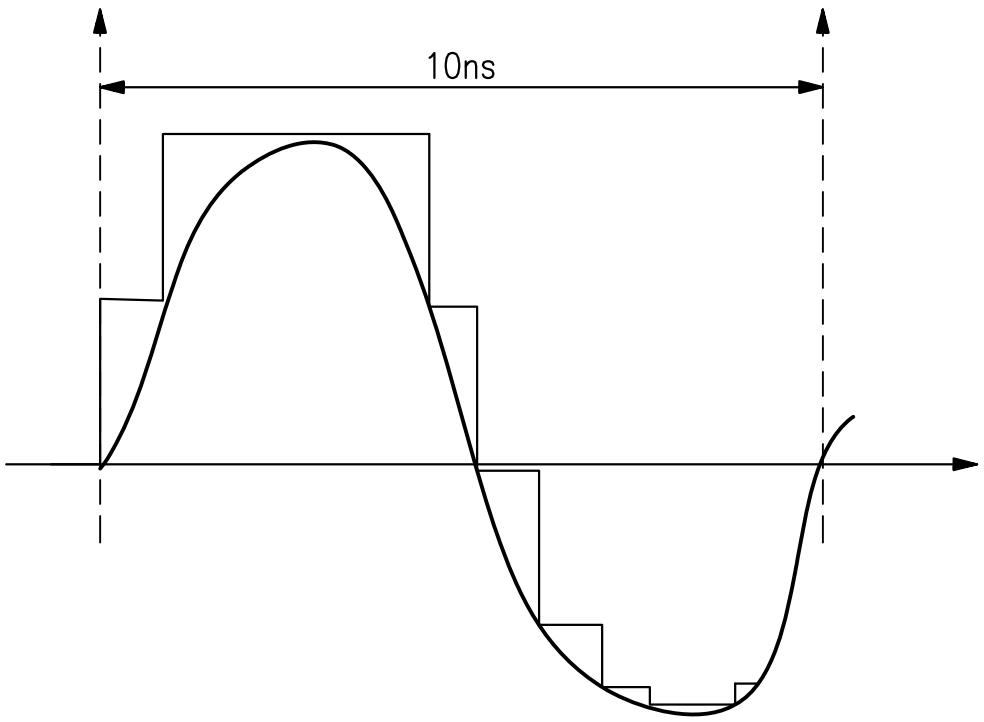

FIG.16