Fig.1

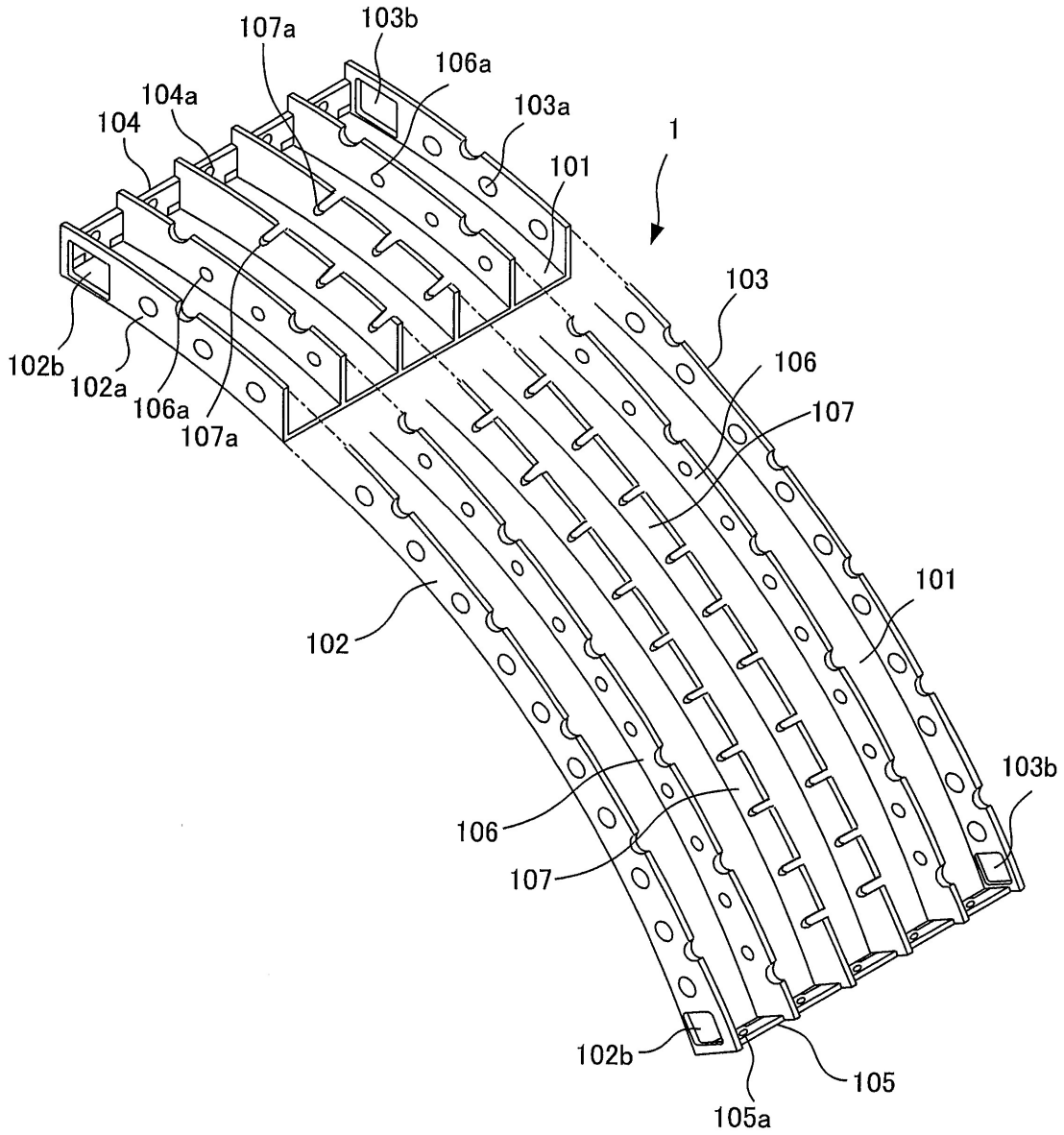
107a
103b
106a
104a
104
103a
1
101
103
102b
102a
106a
107a
106
107
101
102
103b
106
107
102b
105
105a

Fig.2

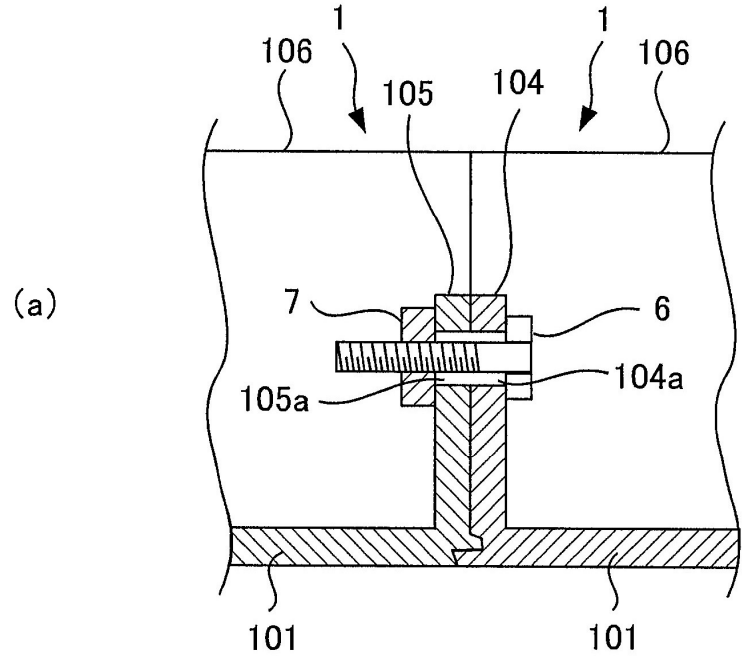
(a)
1
106
105
104
1
106
7
6
104a
105a
101
101

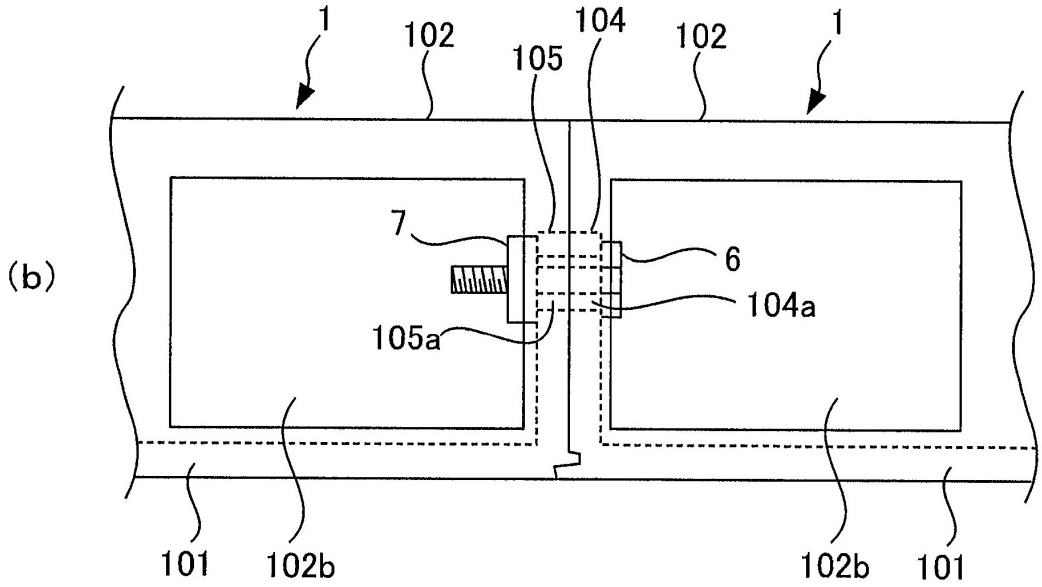
(b)
1
102
105
104
102
1
7
6
104a
105a
101
102b
102b
101

Fig.3

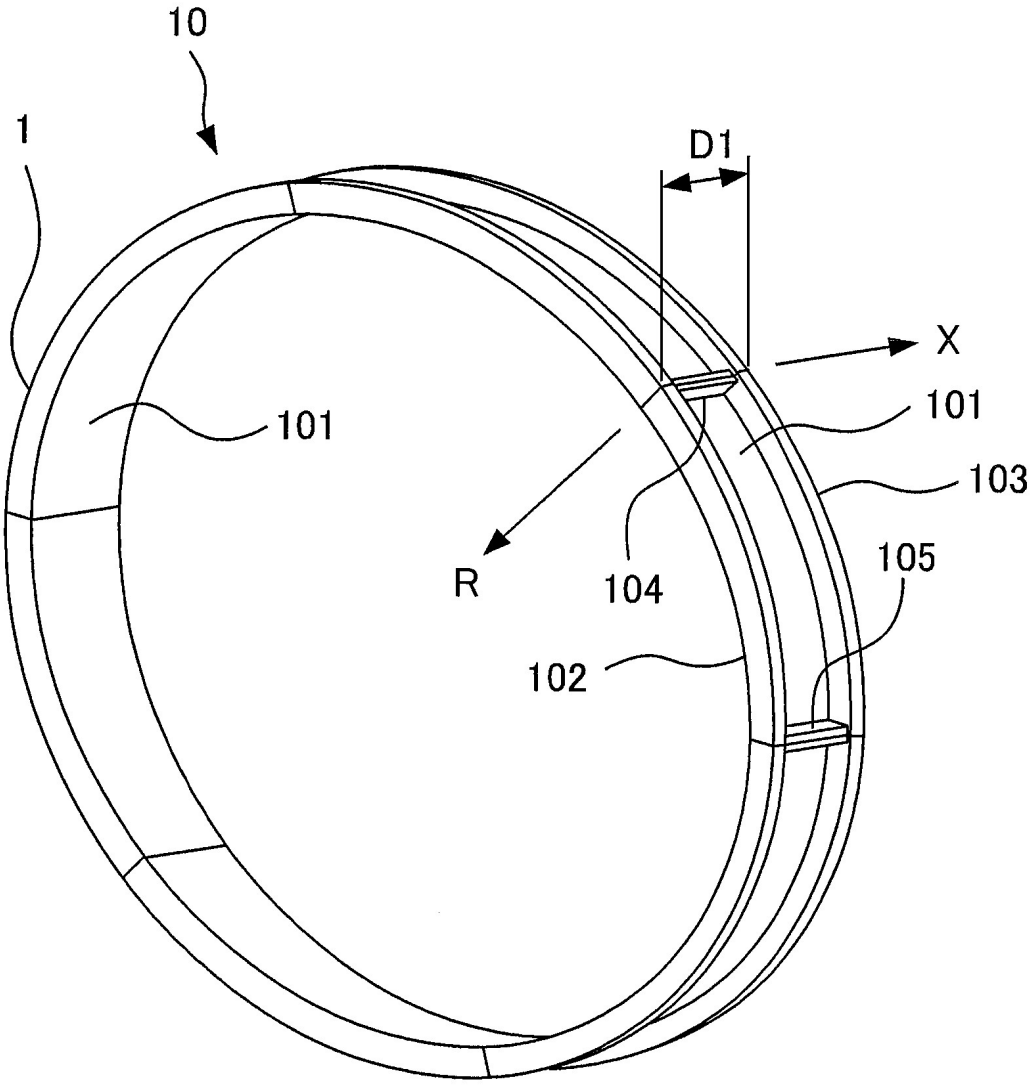

Fig.4

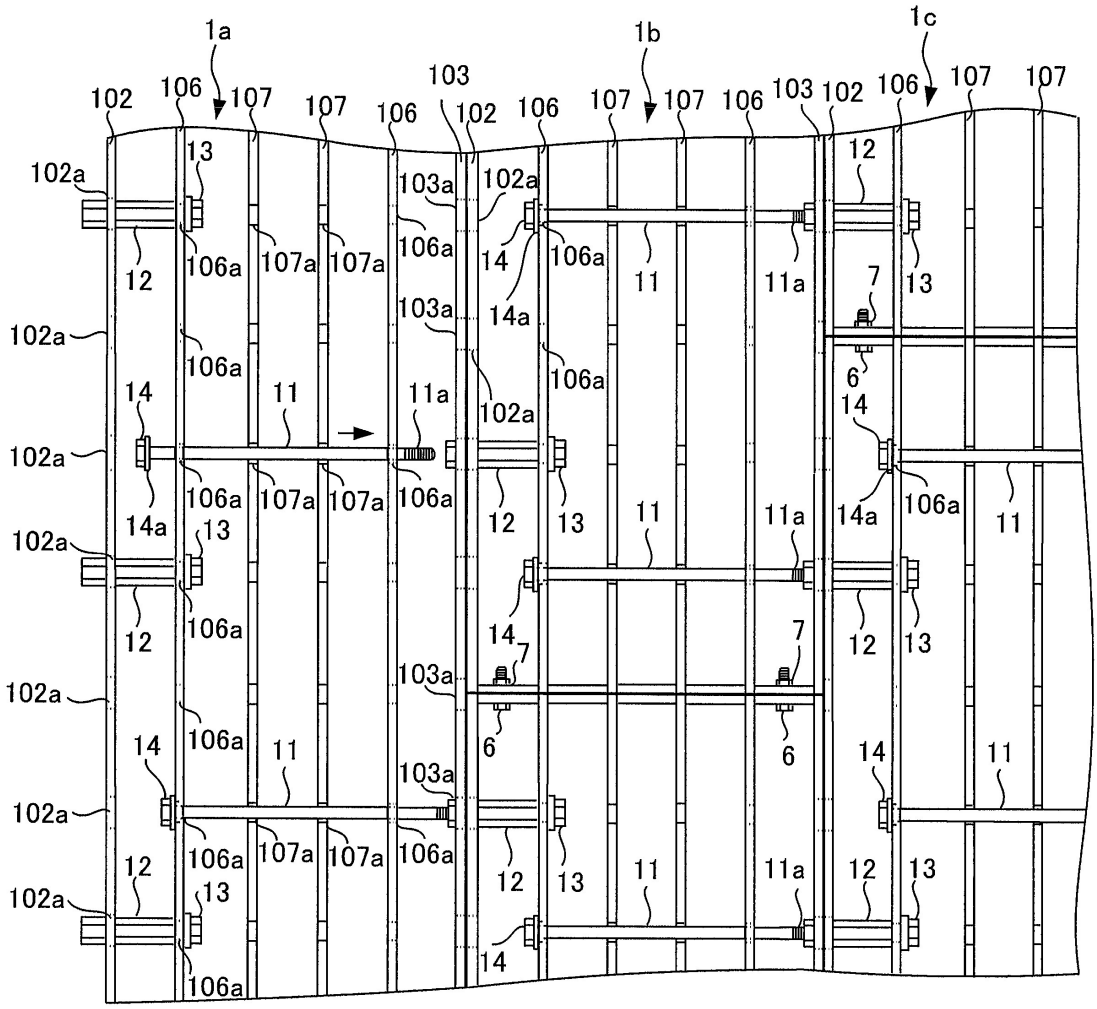
1a
1b
1c
102
106
107
103
13
102a
103a
12
106a
107a
14
14a
11
11a
7
6

Fig.5

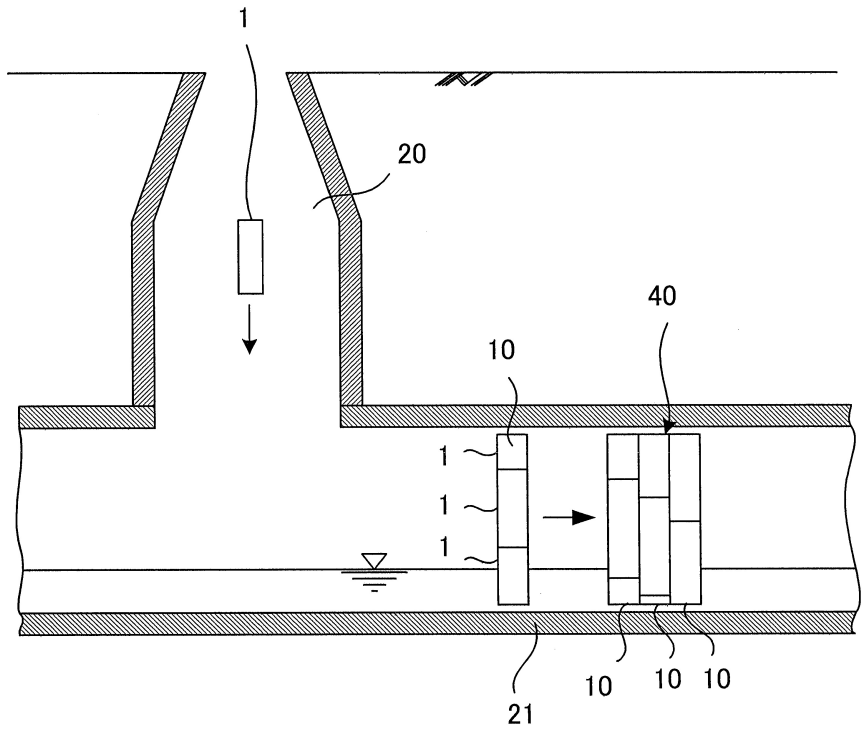

Fig.6

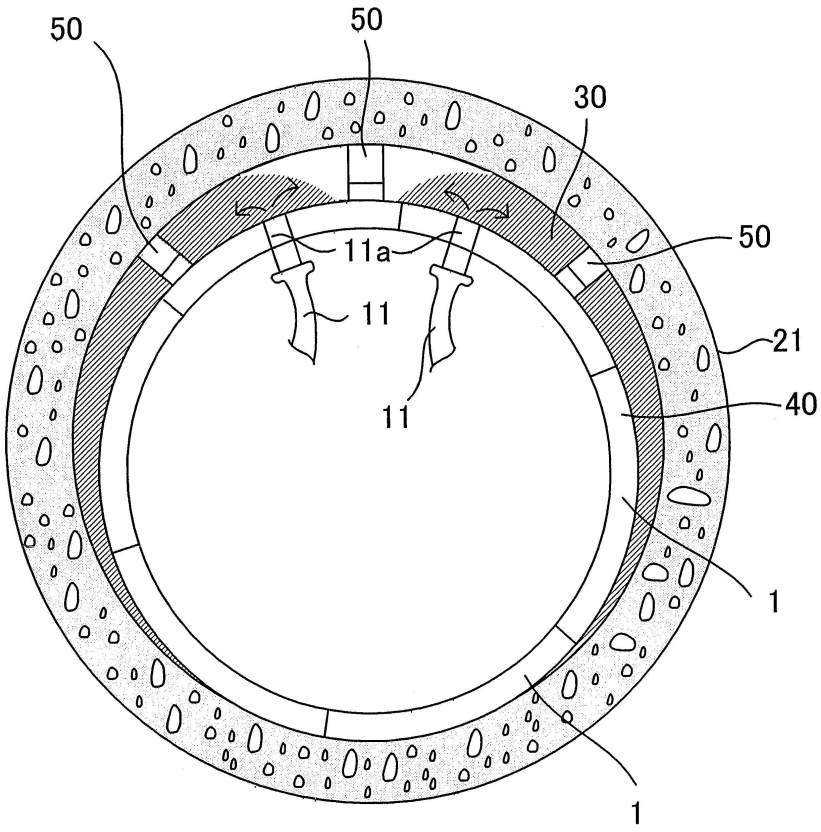

Fig.7

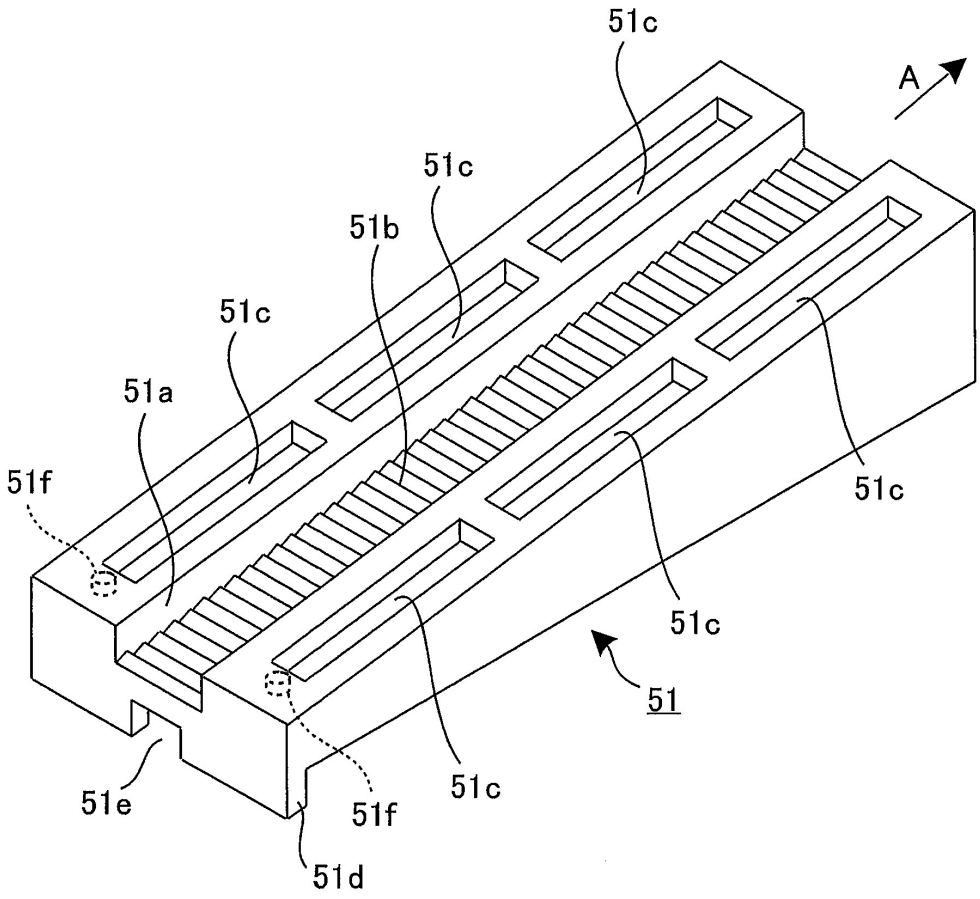

Fig.8

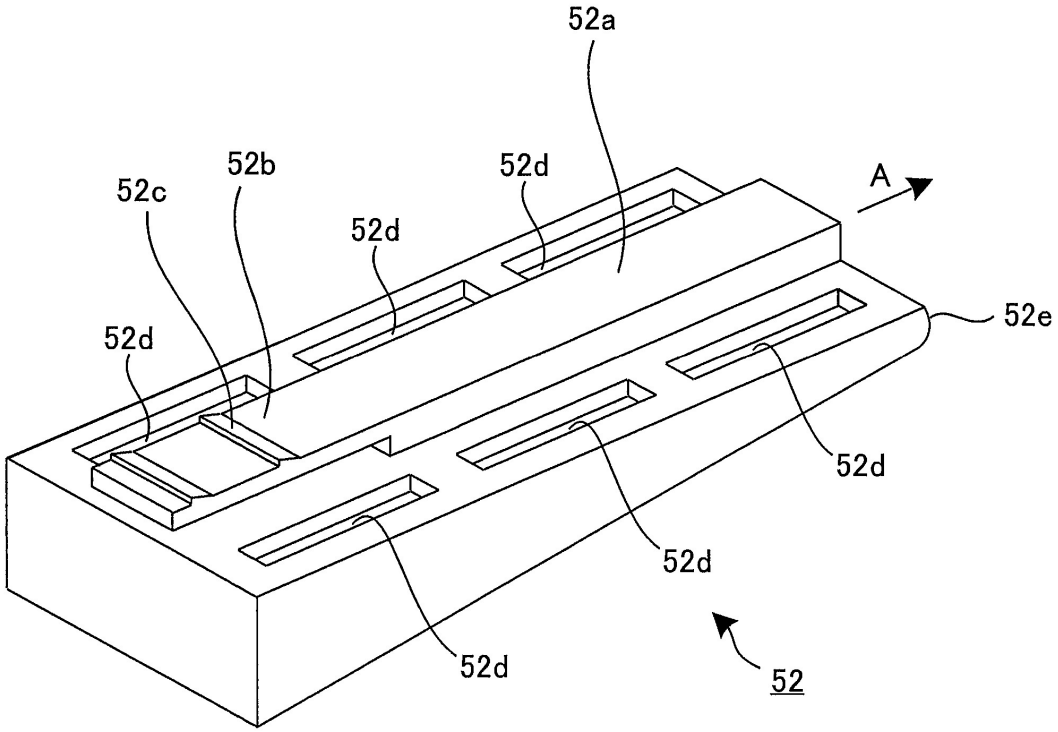

Fig.9

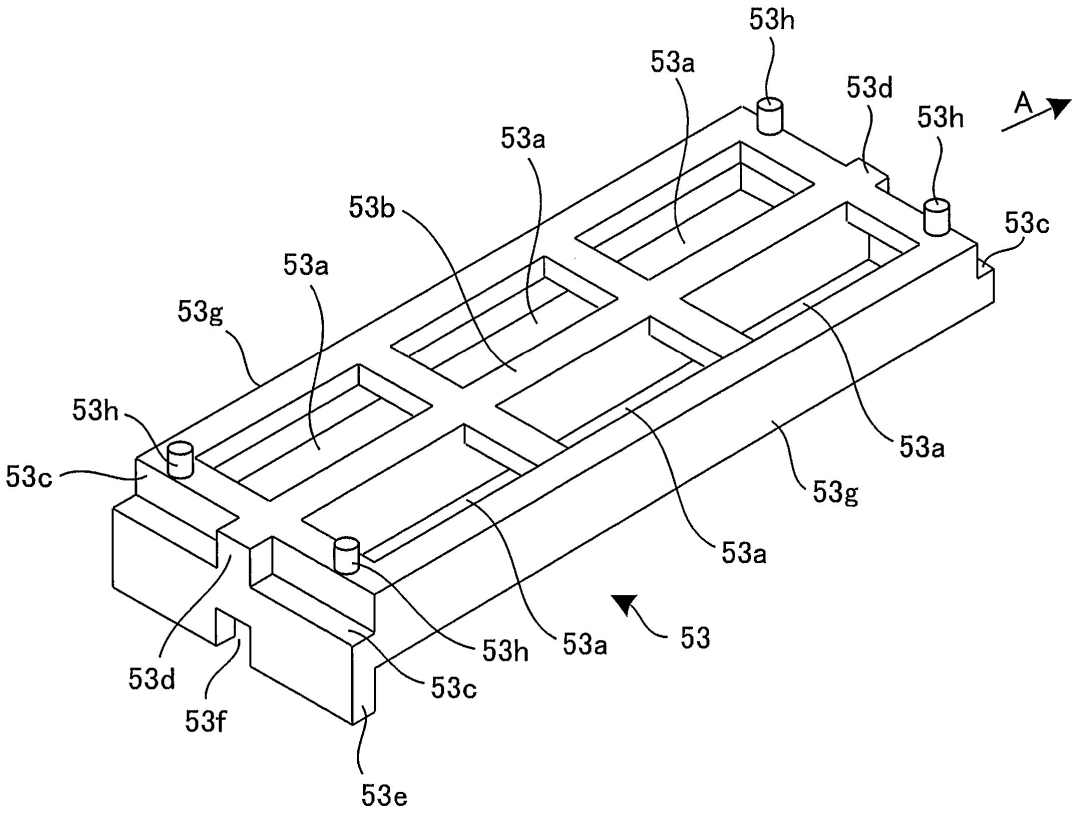
53h
53a
53d
53h
A
53a
53c
53b
53a
53g
53h
53c
53a
53g
53a
53h
53a
53
53d
53c
53f
53e

Fig.10

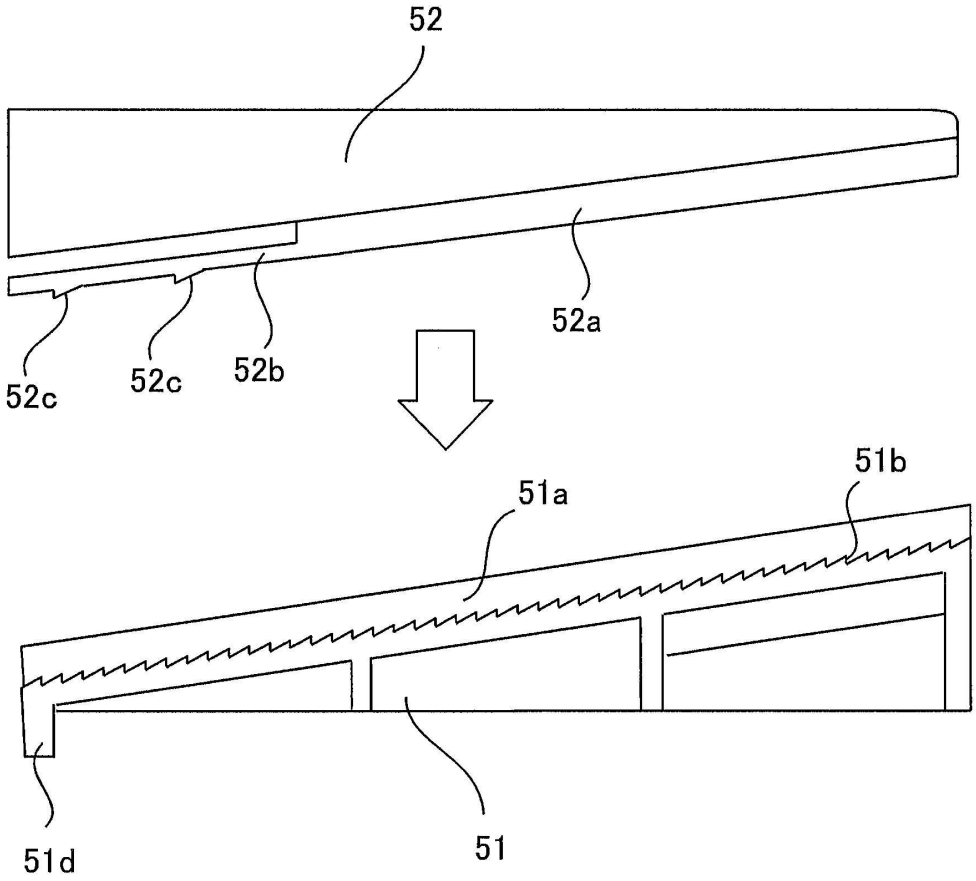

Fig.11

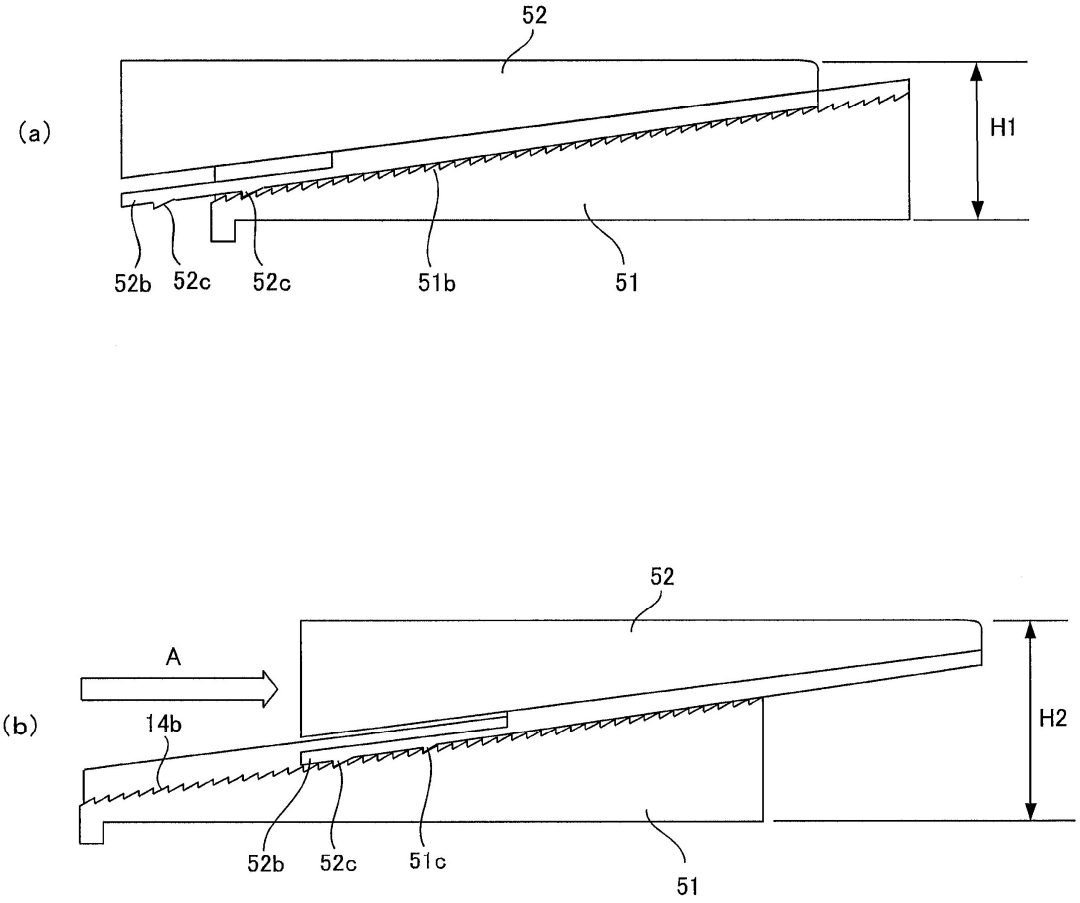

Fig.12

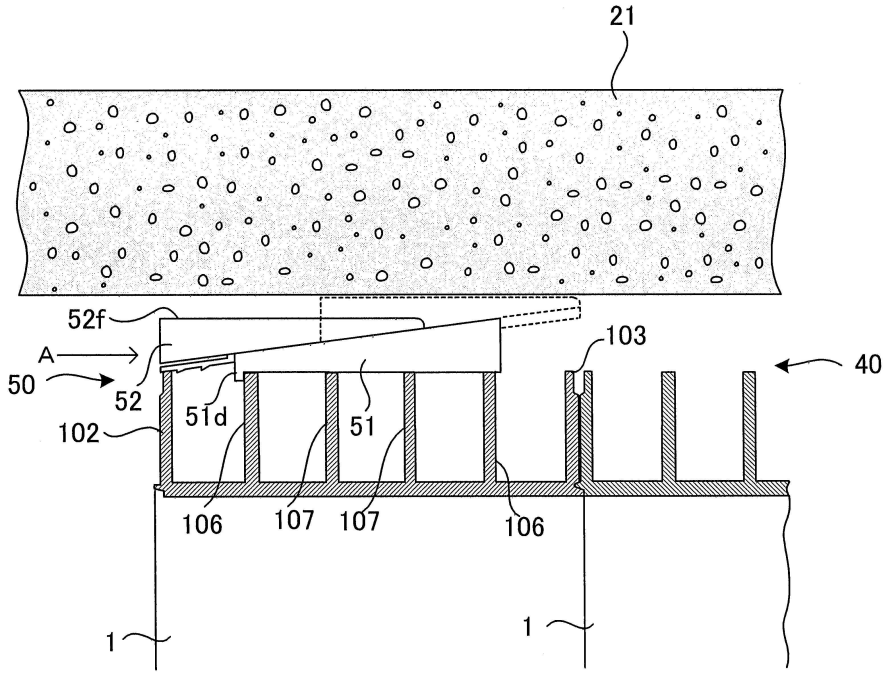

Fig.13

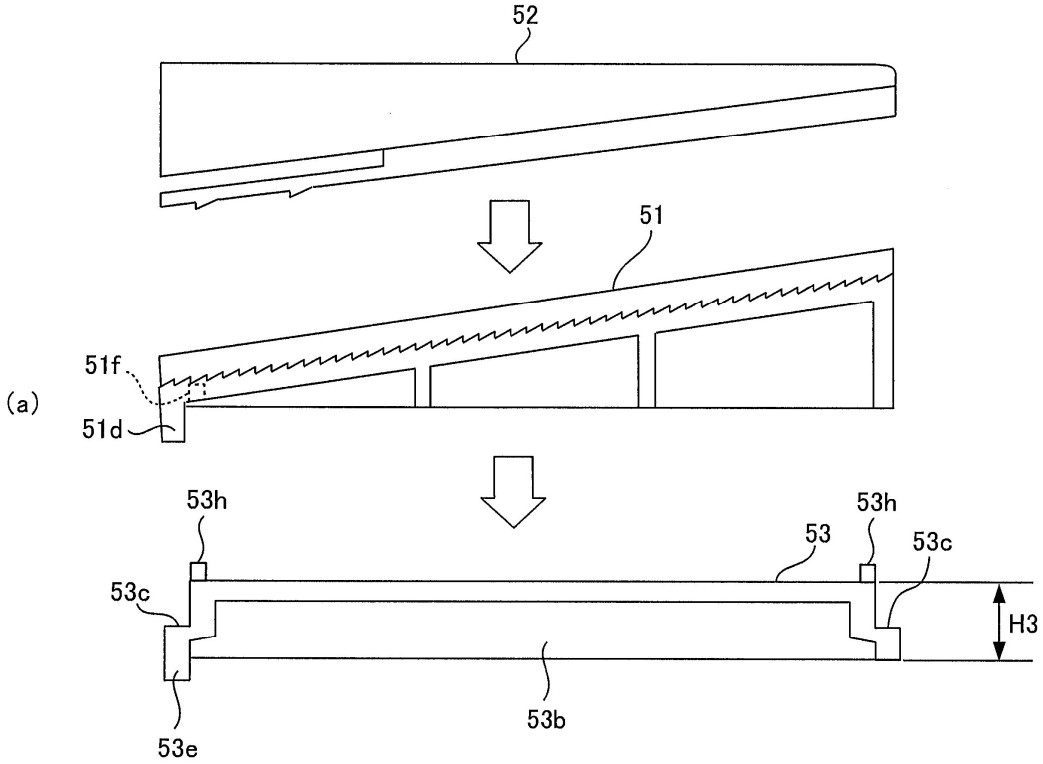
(a)
52
51
51f
51d
53h
53h
53
53c
53c
H3
53e
53b

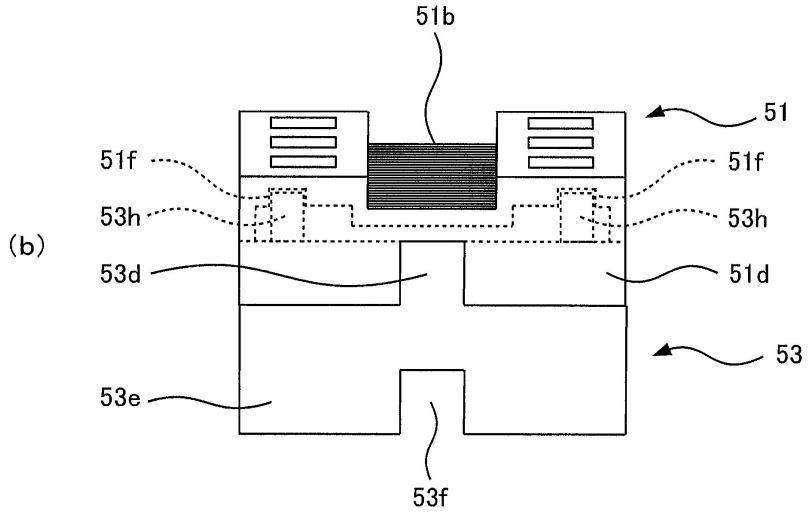
(b)
51b
51
51f
51f
53h
53h
53d
51d
53
53e
53f

Fig.14

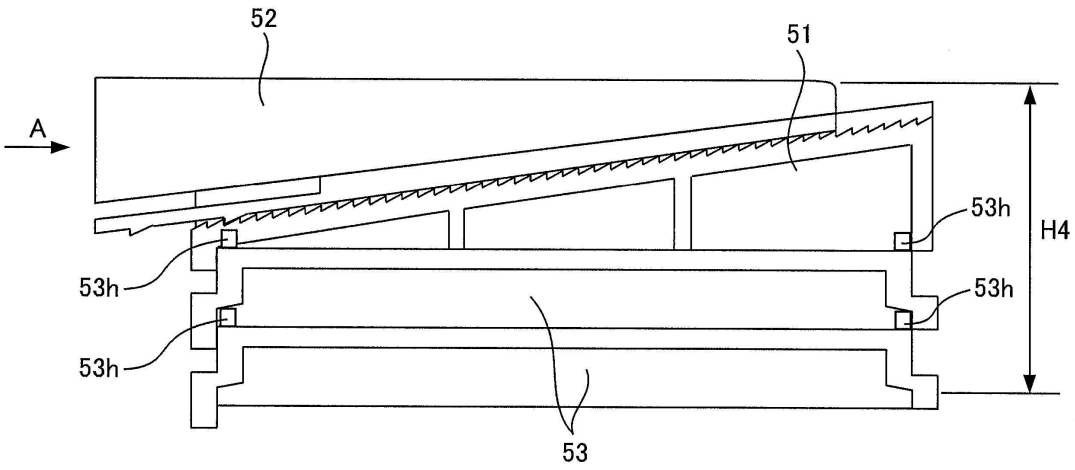

Fig.15

(a)

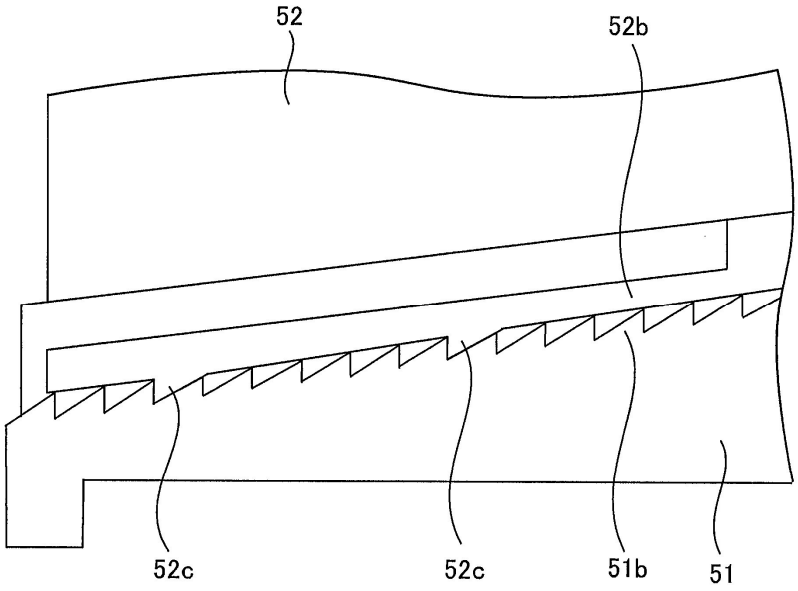

(b)

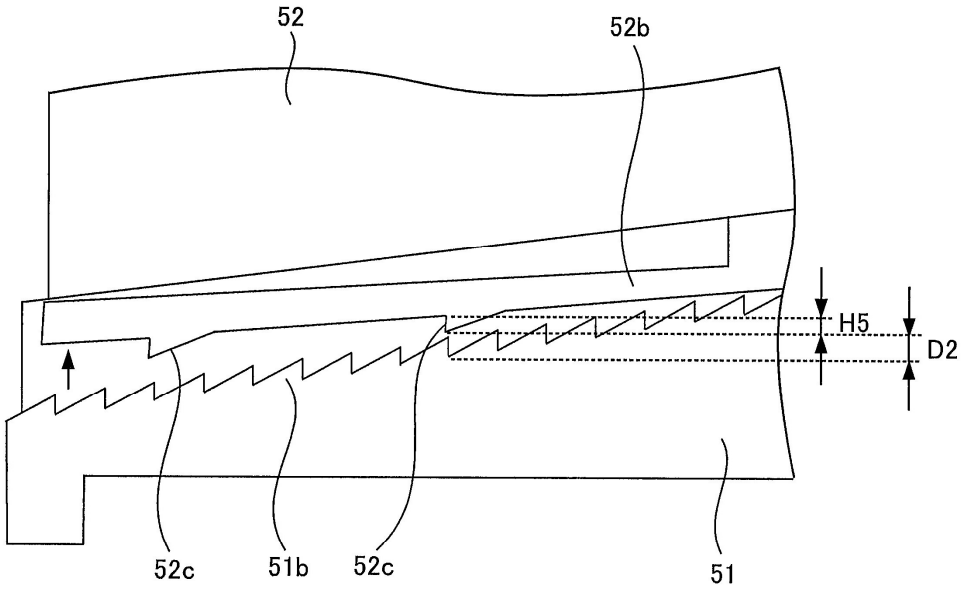

Fig.16

