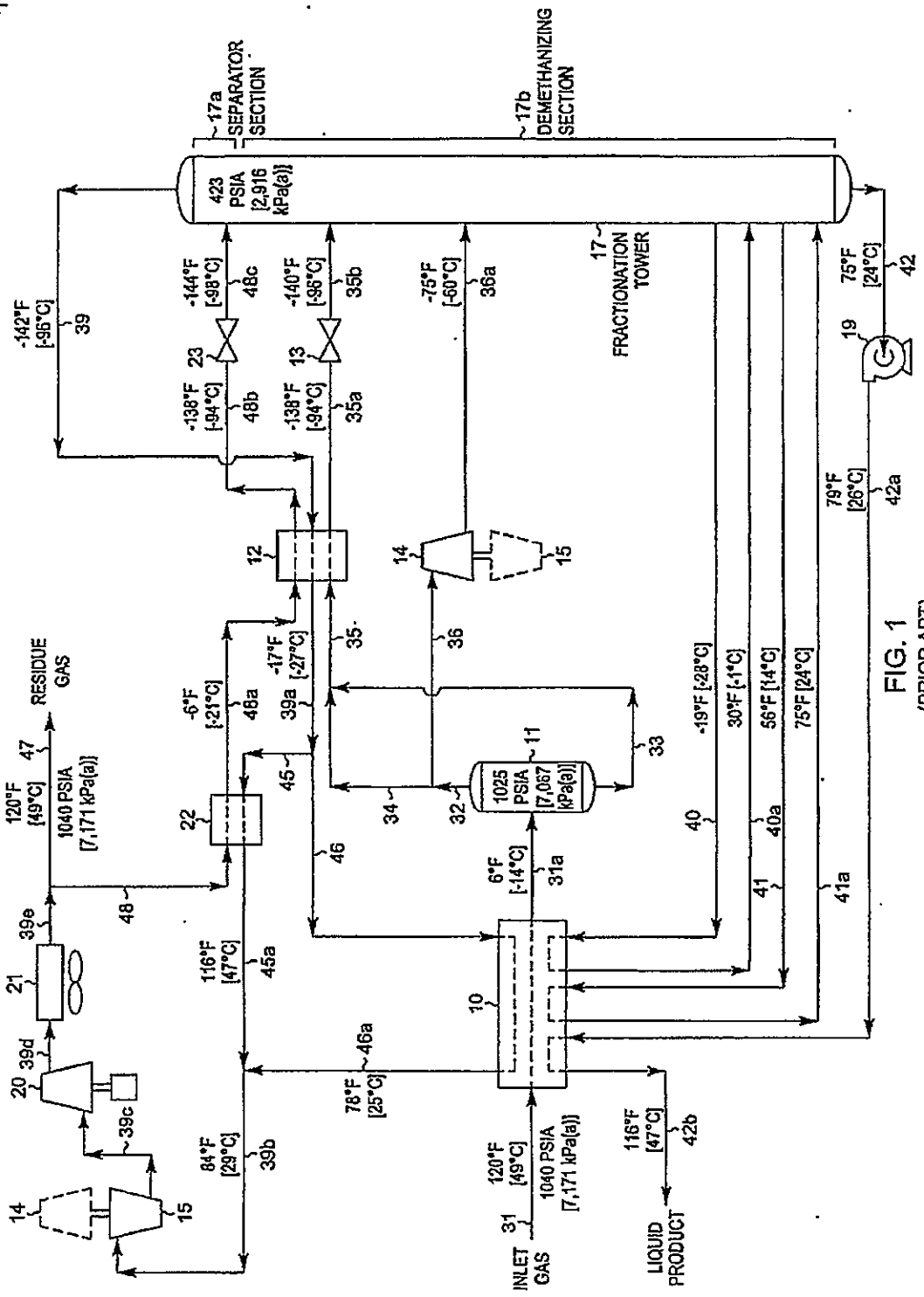

FIG. 1
(PRIOR ART)

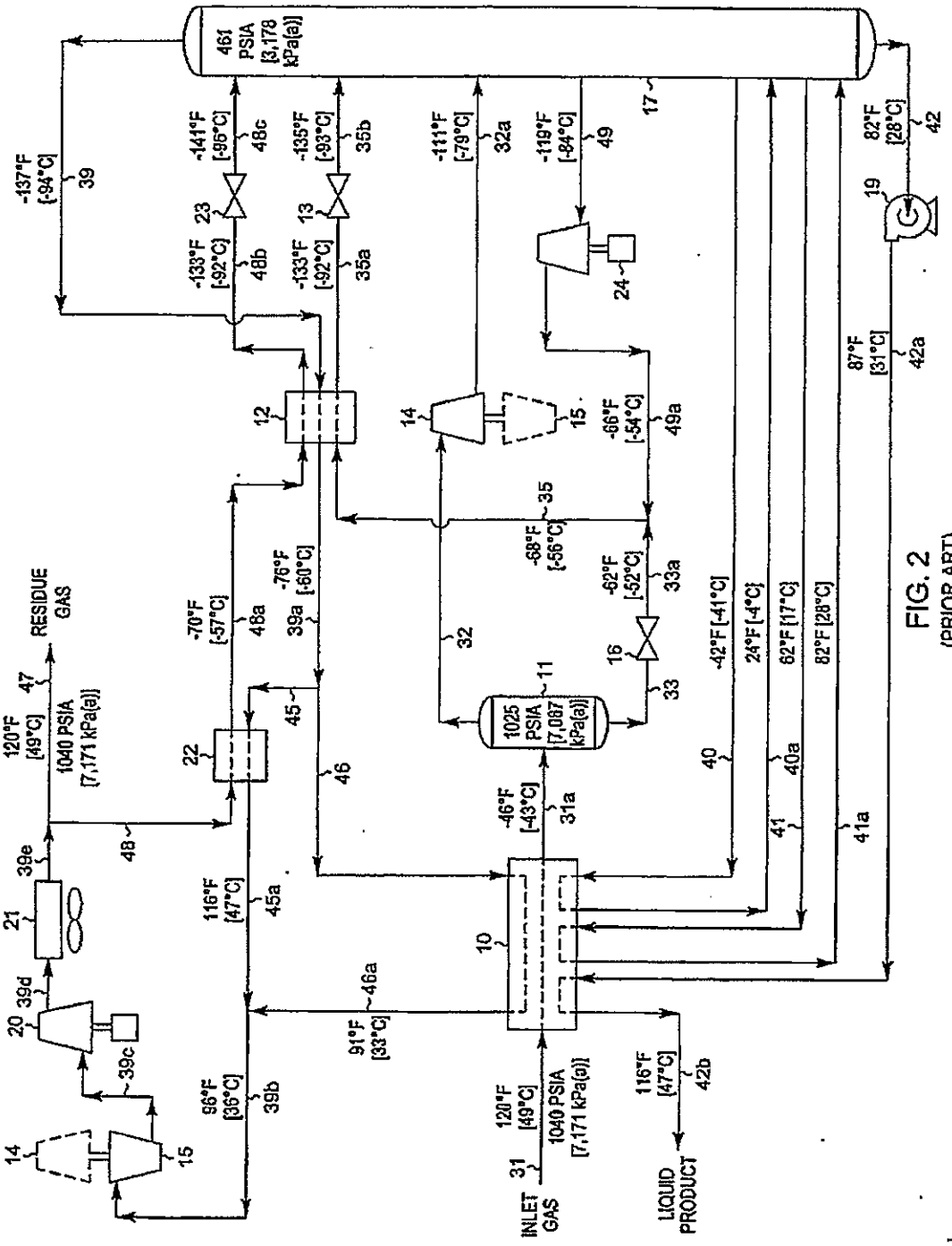

FIG. 2
(PRIOR ART)

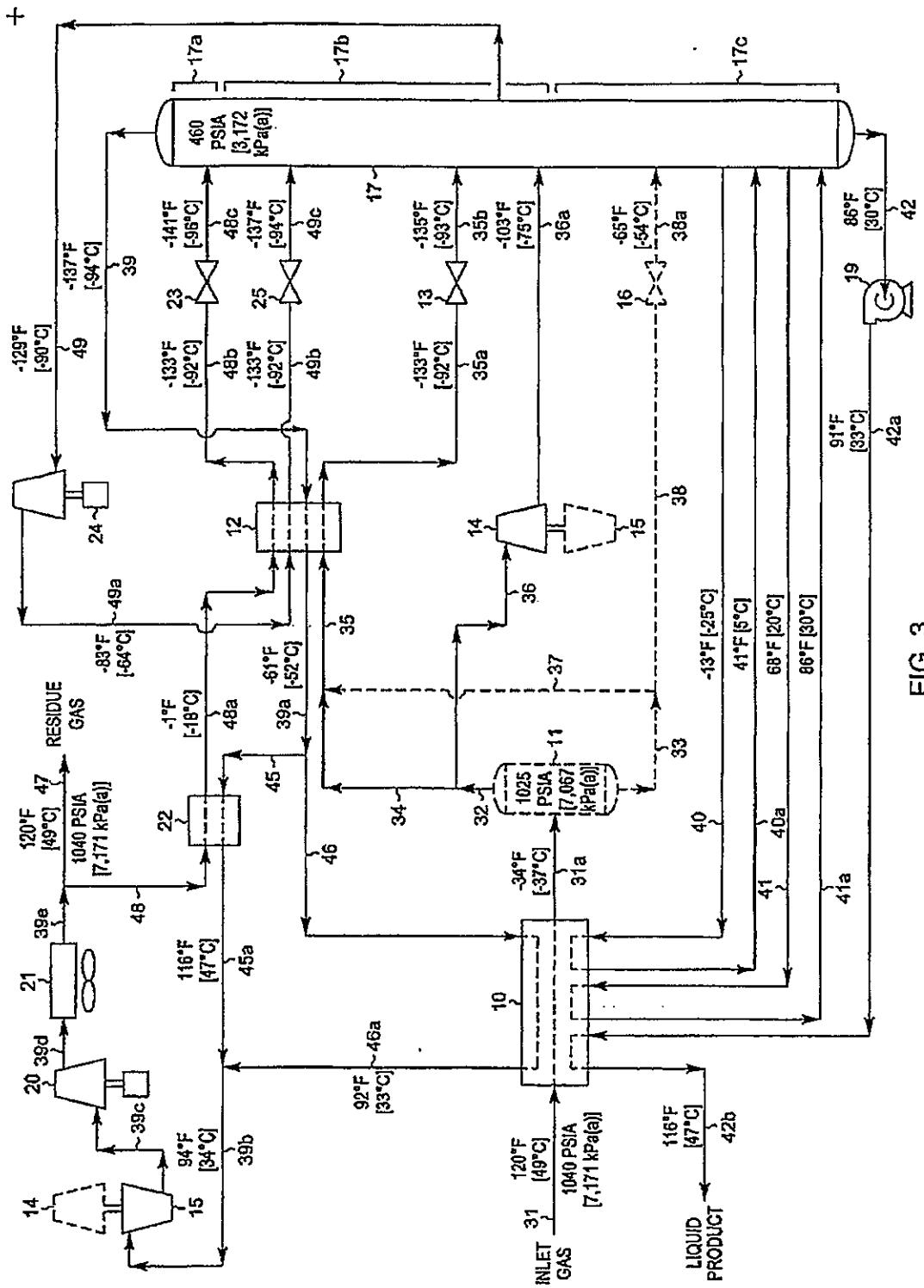
17a
17b
17c
460 PSIA [3,172 kPa(a)]
17
-141°F [-96°C]
48c
-137°F [-94°C]
49c
-135°F [-93°C]
35b
-103°F [-75°C]
36a
-65°F [-54°C]
38a
86°F [30°C]
42
23
25
13
16
19
-137°F [-94°C]
39
-129°F [-90°C]
49
-133°F [-92°C]
48b
-133°F [-92°C]
49b
-133°F [-92°C]
35a
91°F [33°C]
42a
24
12
14
15
38
49a
-83°F [-64°C]
35
36
-61°F [-52°C]
37
-13°F [-25°C]
41°F [5°C]
68°F [20°C]
86°F [30°C]
RESIDUE GAS
-1°F [-18°C]
48a
39a
45
33
11
1025 PSIA [7,067 kPa(a)]
32
34
40
40a
120°F [49°C]
47
1040 PSIA [7,171 kPa(a)]
22
46
-34°F [-37°C]
31a
41
41a
48
39e
116°F [47°C]
45a
21
10
39d
46a
20
39c
92°F [33°C]
94°F [34°C]
39b
120°F [49°C]
1040 PSIA [7,171 kPa(a)]
116°F [47°C]
42b
14
15
31
INLET GAS
LIQUID PRODUCT

FIG. 3

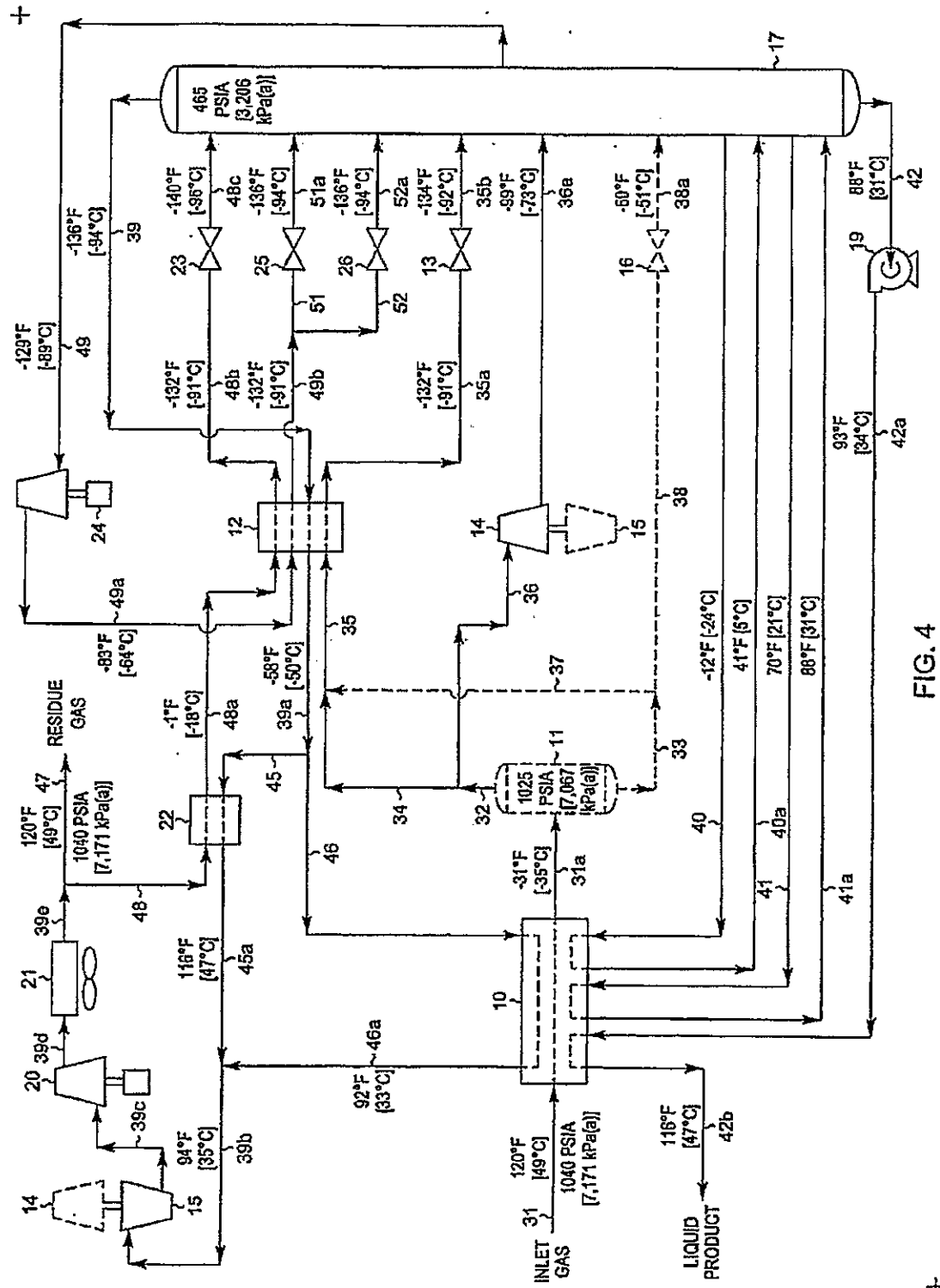
465 PSIA [3,206 kPa(a)]
1025 PSIA [7,067 kPa(a)]
1040 PSIA [7,171 kPa(a)]
RESIDUE GAS
INLET GAS
LIQUID PRODUCT
120°F [49°C]
116°F [47°C]
94°F [35°C]
92°F [33°C]
-31°F [-35°C]
-12°F [-24°C]
41°F [5°C]
70°F [21°C]
88°F [31°C]
93°F [34°C]
-129°F [-89°C]
-136°F [-94°C]
-140°F [-96°C]
-132°F [-91°C]
-99°F [-73°C]
-60°F [-51°C]
-83°F [-64°C]
-58°F [-50°C]
-1°F [-18°C]
-50°F [-51°C]

FIG. 4

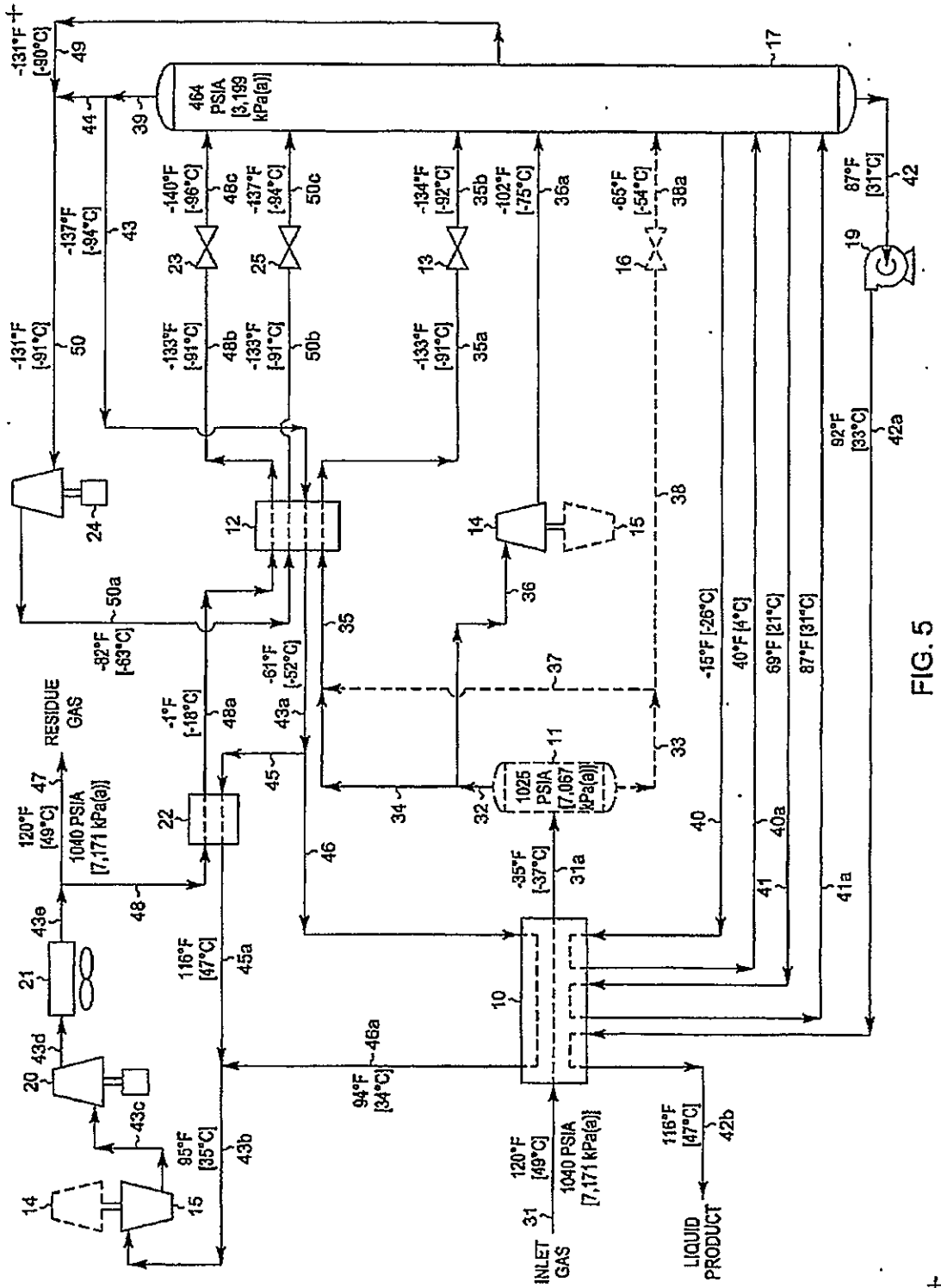
464 PSIA [3,199 kPa(a)]
-131°F [-90°C]
-137°F [-94°C]
-131°F [-91°C]
-140°F [-96°C]
-137°F [-94°C]
-134°F [-92°C]
-102°F [-75°C]
-65°F [-54°C]
87°F [31°C]
-133°F [-91°C]
-82°F [-63°C]
-61°F [-52°C]
-1°F [-18°C]
RESIDUE GAS
120°F [49°C]
1040 PSIA [7,171 kPa(a)]
1025 PSIA [7,067 kPa(a)]
-35°F [-37°C]
-15°F [-26°C]
40°F [4°C]
69°F [21°C]
87°F [31°C]
92°F [33°C]
116°F [47°C]
85°F [35°C]
94°F [34°C]
INLET GAS
LIQUID PRODUCT
FIG. 5

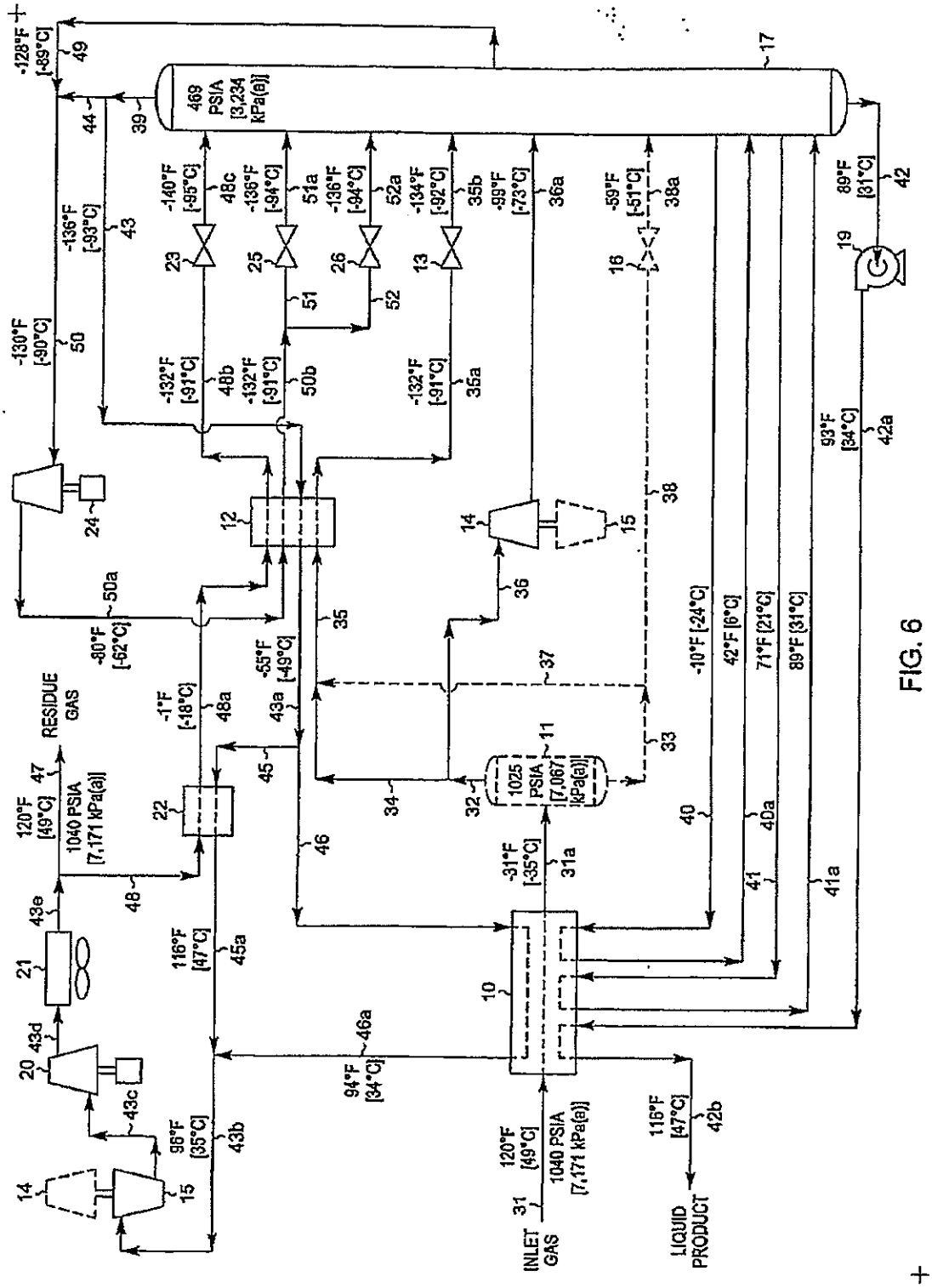
-128°F [-89°C]
49
469 PSIA [3,234 kPa(a)]
17
39
44
-140°F [-95°C]
48c
-136°F [-94°C]
51a
-136°F [-94°C]
52a
-134°F [-92°C]
35b
-99°F [-73°C]
36a
-59°F [-51°C]
38a
89°F [31°C]
42
-136°F [-93°C]
43
23
25
26
13
16
19
-130°F [-90°C]
50
51
52
-132°F [-91°C]
48b
-132°F [-91°C]
50b
-132°F [-91°C]
35a
93°F [34°C]
42a
24
12
14
15
38
50a
-80°F [-62°C]
35
36
-10°F [-24°C]
42°F [6°C]
71°F [21°C]
89°F [31°C]
37
-55°F [-49°C]
43a
-1°F [-18°C]
48a
RESIDUE GAS
120°F [49°C]
47
1040 PSIA [7,171 kPa(a)]
22
45
1025 PSIA [7,067 kPa(a)]
11
33
34
32
40
40a
41
41a
46
-31°F [-35°C]
31a
48
43e
21
116°F [47°C]
45a
10
43d
20
46a
94°F [34°C]
43c
98°F [35°C]
43b
14
15
120°F [49°C]
1040 PSIA [7,171 kPa(a)]
31
INLET GAS
116°F [47°C]
42b
LIQUID PRODUCT

FIG. 6

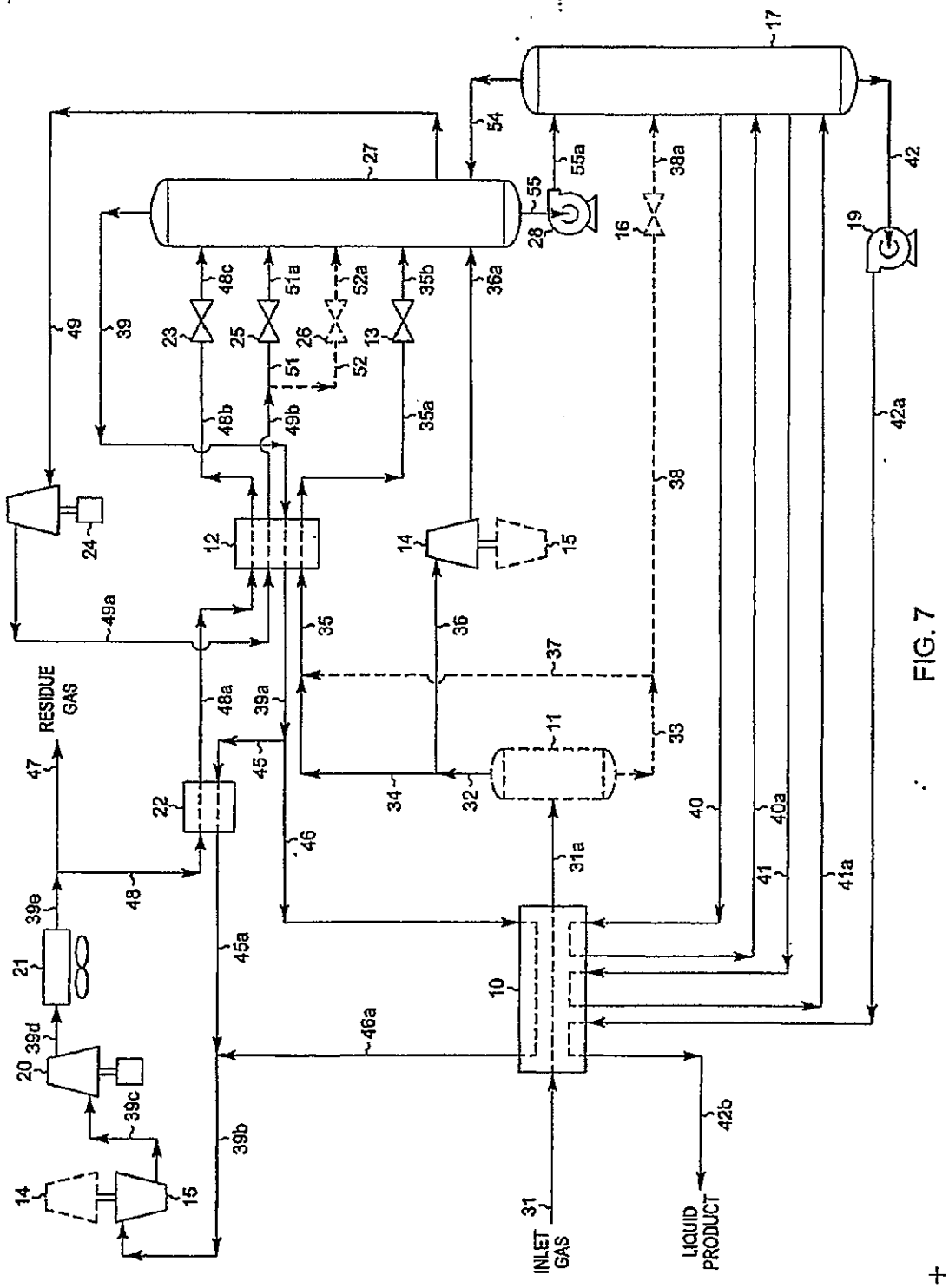

FIG. 7

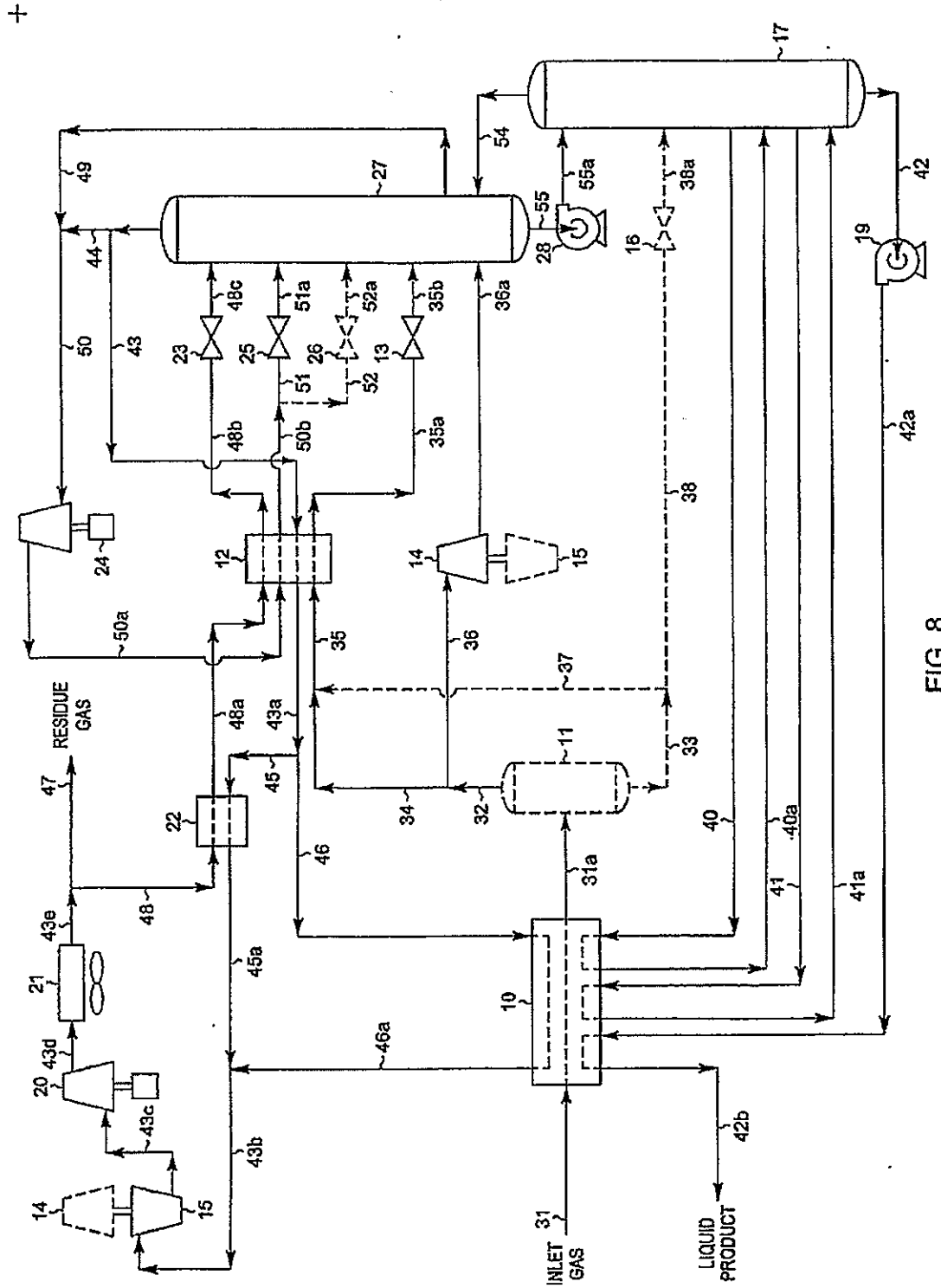

FIG. 8