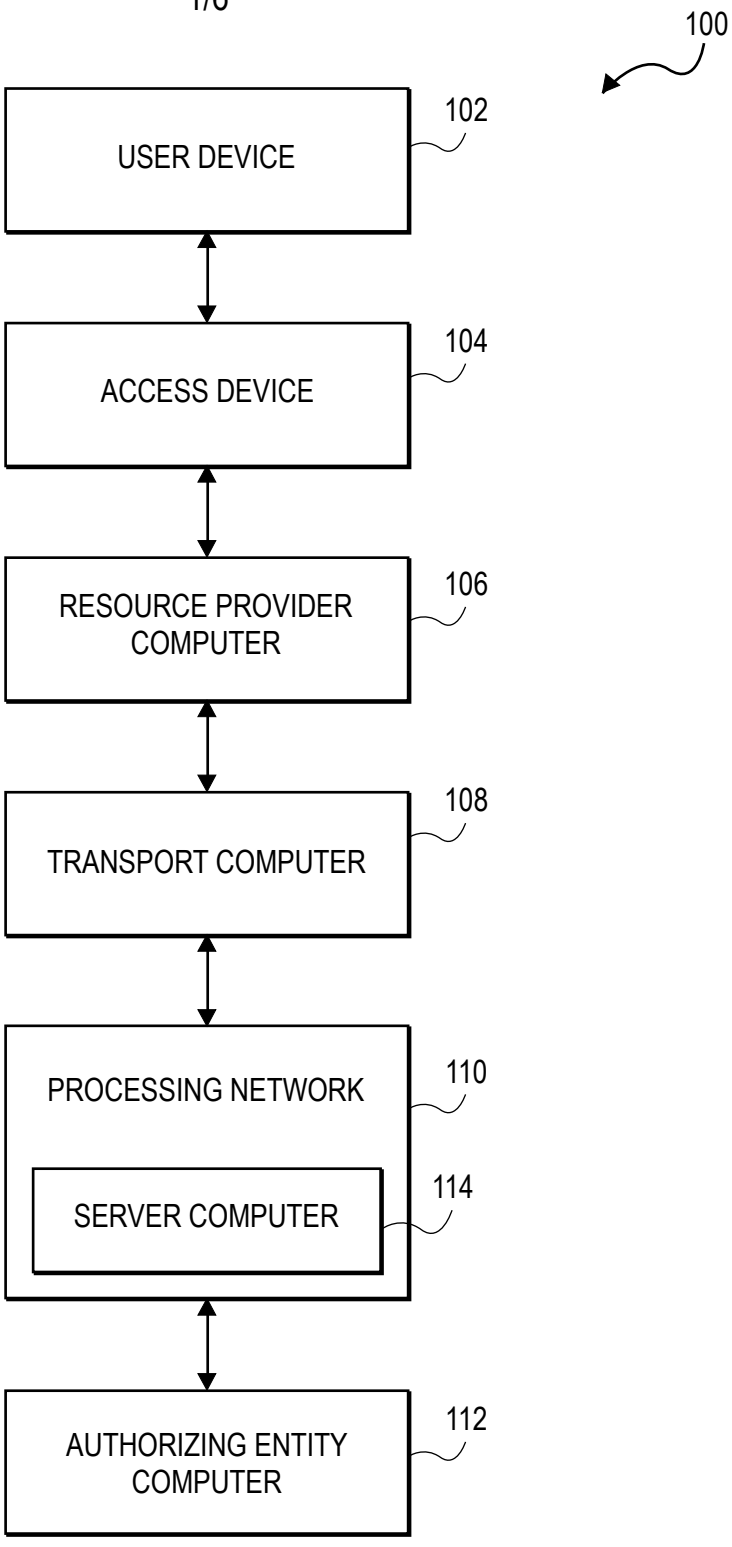
100
USER DEVICE
102
ACCESS DEVICE
104
RESOURCE PROVIDER COMPUTER
106
TRANSPORT COMPUTER
108
PROCESSING NETWORK
110
SERVER COMPUTER
114
AUTHORIZING ENTITY COMPUTER
112

FIG. 1

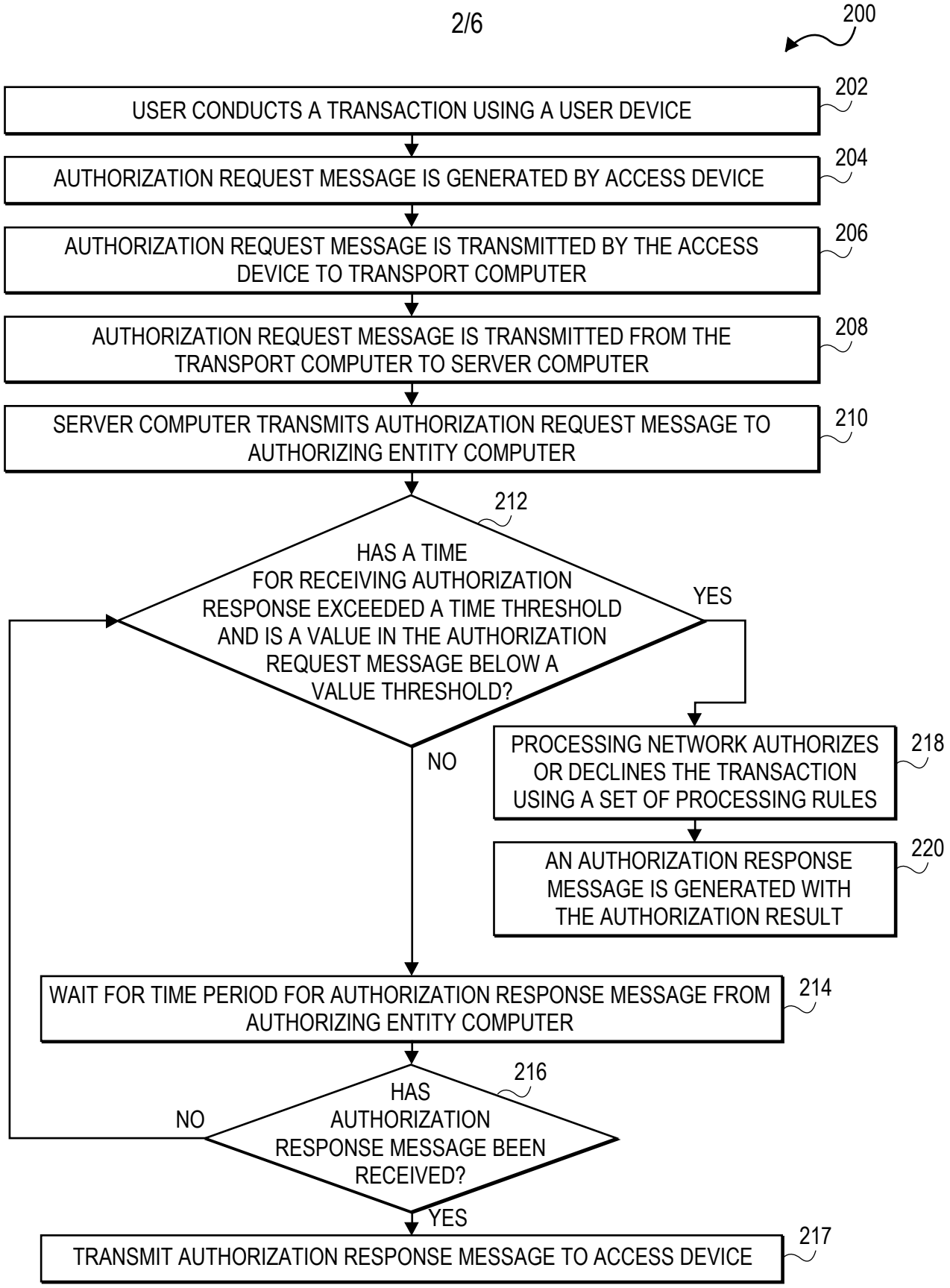
200
USER CONDUCTS A TRANSACTION USING A USER DEVICE
202
AUTHORIZATION REQUEST MESSAGE IS GENERATED BY ACCESS DEVICE
204
AUTHORIZATION REQUEST MESSAGE IS TRANSMITTED BY THE ACCESS DEVICE TO TRANSPORT COMPUTER
206
AUTHORIZATION REQUEST MESSAGE IS TRANSMITTED FROM THE TRANSPORT COMPUTER TO SERVER COMPUTER
208
SERVER COMPUTER TRANSMITS AUTHORIZATION REQUEST MESSAGE TO AUTHORIZING ENTITY COMPUTER
210
212
HAS A TIME FOR RECEIVING AUTHORIZATION RESPONSE EXCEEDED A TIME THRESHOLD AND IS A VALUE IN THE AUTHORIZATION REQUEST MESSAGE BELOW A VALUE THRESHOLD?
YES
NO
PROCESSING NETWORK AUTHORIZES OR DECLINES THE TRANSACTION USING A SET OF PROCESSING RULES
218
AN AUTHORIZATION RESPONSE MESSAGE IS GENERATED WITH THE AUTHORIZATION RESULT
220
WAIT FOR TIME PERIOD FOR AUTHORIZATION RESPONSE MESSAGE FROM AUTHORIZING ENTITY COMPUTER
214
216
HAS AUTHORIZATION RESPONSE MESSAGE BEEN RECEIVED?
NO
YES
TRANSMIT AUTHORIZATION RESPONSE MESSAGE TO ACCESS DEVICE
217

FIG. 2

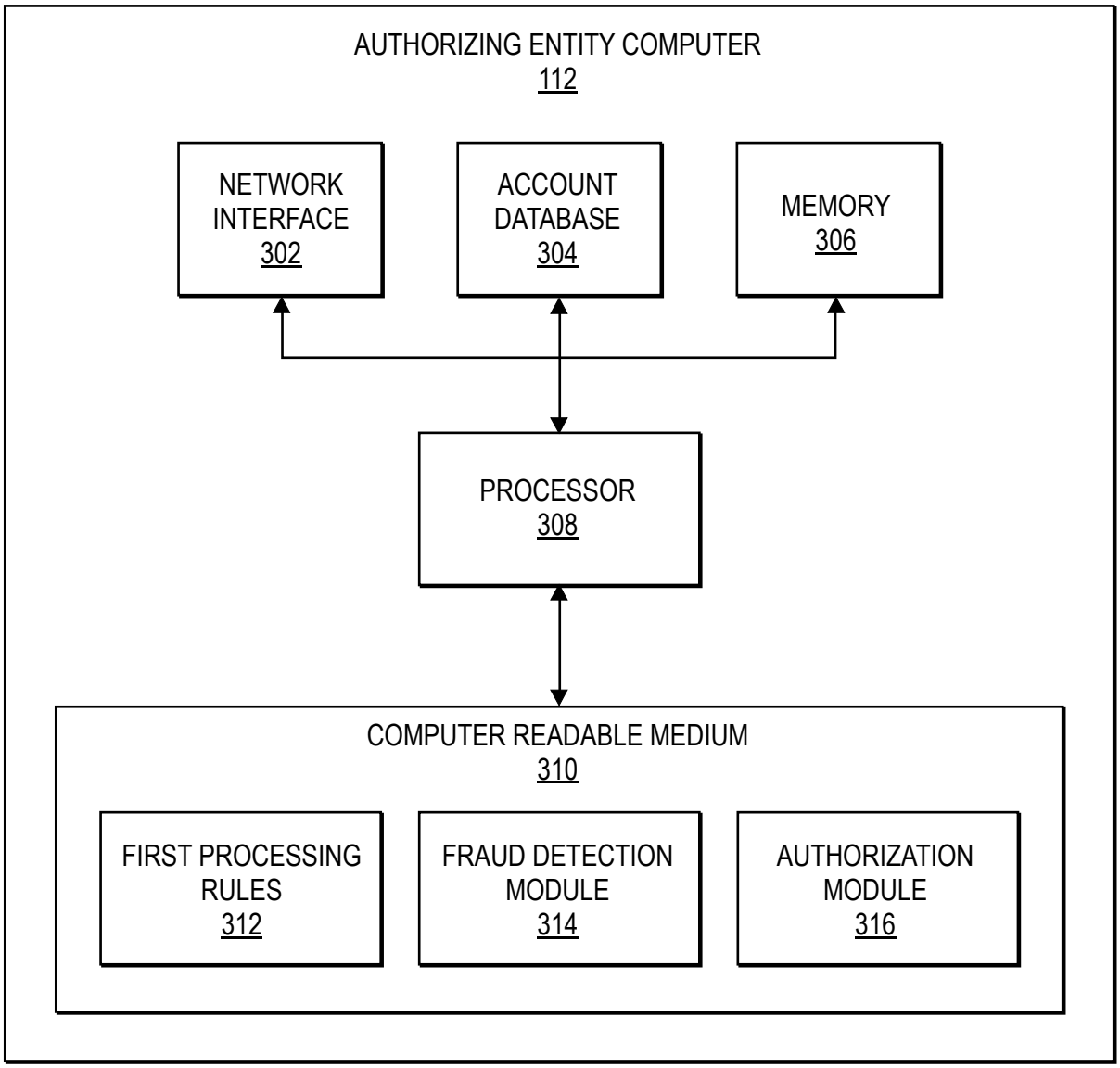
AUTHORIZING ENTITY COMPUTER
112
NETWORK INTERFACE
302
ACCOUNT DATABASE
304
MEMORY
306
PROCESSOR
308
COMPUTER READABLE MEDIUM
310
FIRST PROCESSING RULES
312
FRAUD DETECTION MODULE
314
AUTHORIZATION MODULE
316

FIG. 3

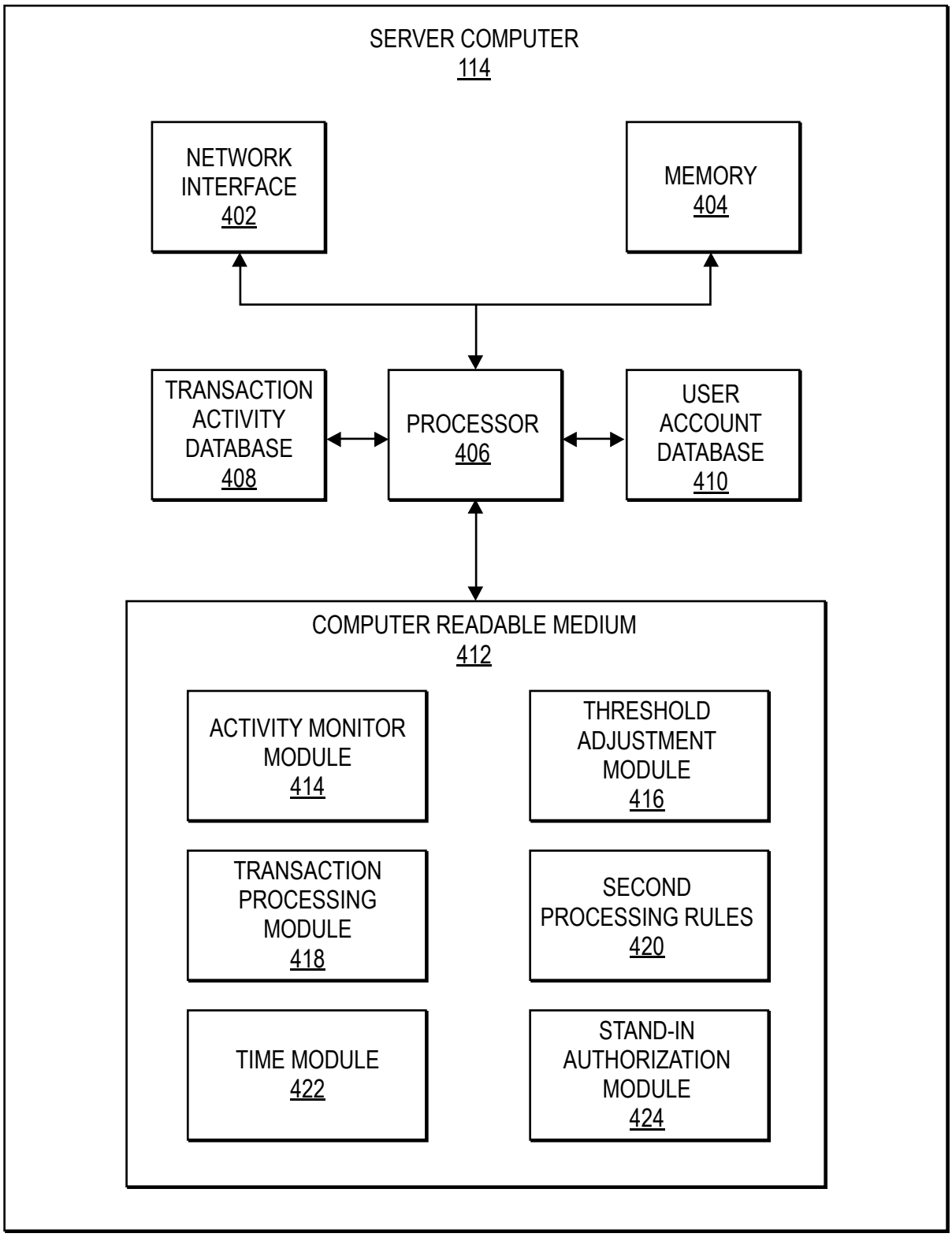
SERVER COMPUTER
114
NETWORK INTERFACE
402
MEMORY
404
TRANSACTION ACTIVITY DATABASE
408
PROCESSOR
406
USER ACCOUNT DATABASE
410
COMPUTER READABLE MEDIUM
412
ACTIVITY MONITOR MODULE
414
THRESHOLD ADJUSTMENT MODULE
416
TRANSACTION PROCESSING MODULE
418
SECOND PROCESSING RULES
420
TIME MODULE
422
STAND-IN AUTHORIZATION MODULE
424

FIG. 4

MTI	Description	Sent	Hold	Auth
0100	Authorization Request	Yes		No
0120	Authorization Advice	Yes		No
0200	Financial Request	Yes		No
0220	Financial Advice	Yes		No
0300	Acquirer Rile Update	Yes		No
0420	Reversal Request	Yes		No
0430	Reversal Advice	Yes		No
0600	Administrative Request	Yes		No
0800	Network Management Request	Yes		No
0820	Network Management Advice	Yes		No

FIG. 5A

MTI	Description	Sent	Hold	Auth
0100	Authorization Request	Yes		No
0120	Authorization Advice	Yes		No
0200	Financial Request	Yes		No
0220	Financial Advice	Yes		No
0300	Acquirer Rile Update		Yes	No
0420	Reversal Request	Yes		No
0430	Reversal Advice	Yes		No
0600	Administrative Request		Yes	No
0800	Network Management Request		Yes	No
0820	Network Management Advice		Yes	No

FIG. 5B

MTI	Description	Sent	Hold	Auth
0100	Authorization Request	Yes		No
0120	Authorization Advice		Yes	No
0200	Financial Request	Yes		No
0220	Financial Advice		Yes	No
0300	Acquirer Rile Update		Yes	No
0420	Reversal Request	Yes		No
0430	Reversal Advice		Yes	No
0600	Administrative Request		Yes	No
0800	Network Management Request		Yes	No
0820	Network Management Advice		Yes	No

FIG. 5C

MTI	Description	Sent	Hold	Auth
0100	Authorization Request	Yes	<$25	Yes
0120	Authorization Advice		Yes	No
0200	Financial Request	Yes	<$25	Yes
0220	Financial Advice		Yes	No
0300	Acquirer Rile Update		Yes	No
0420	Reversal Request	Yes		No
0430	Reversal Advice		Yes	No
0600	Administrative Request		Yes	No
0800	Network Management Request		Yes	No
0820	Network Management Advice		Yes	No

FIG. 5D