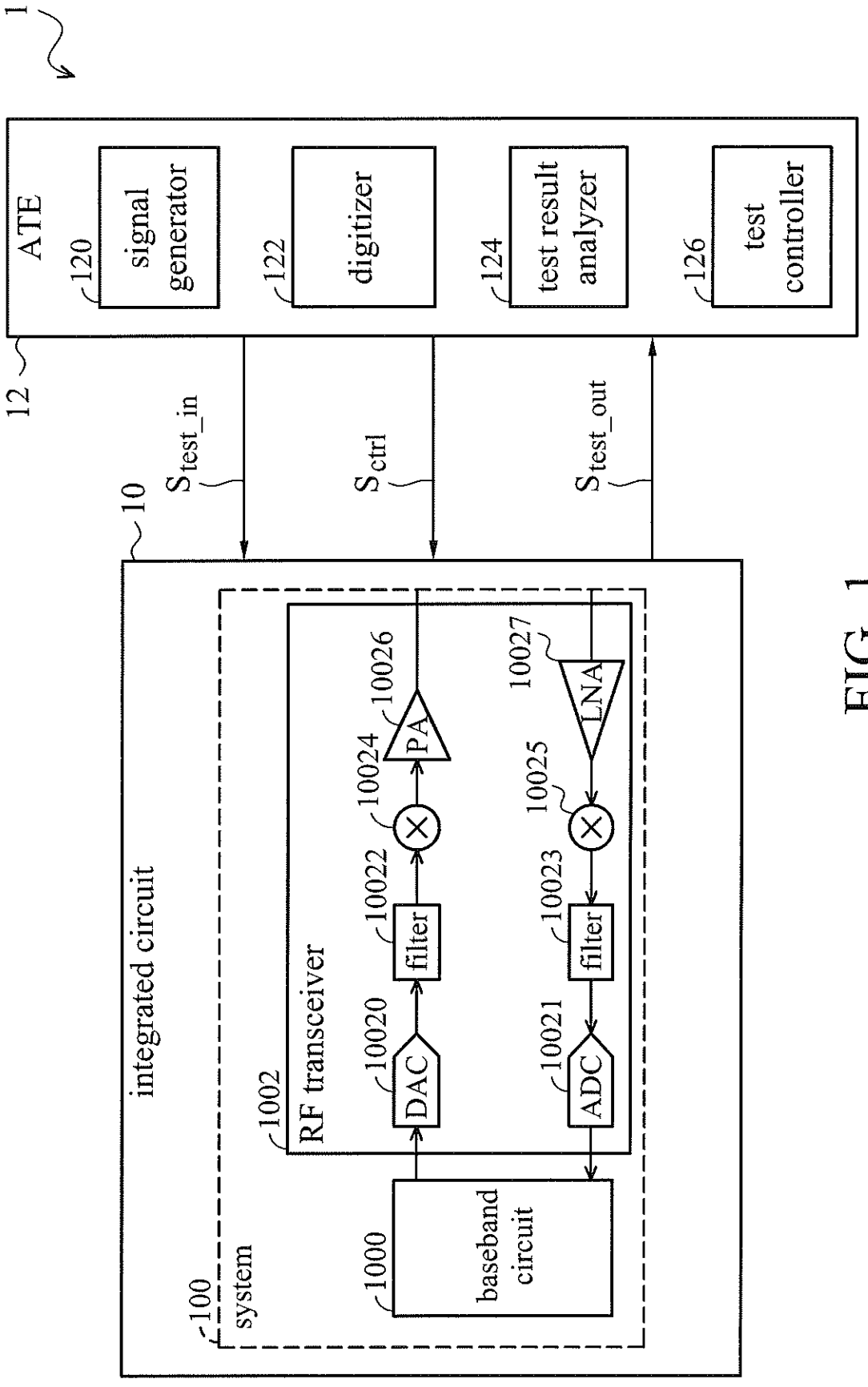
1
ATE
120
signal generator
122
digitizer
124
test result analyzer
126
test controller
12
S_{test_in}
S_{ctrl}
S_{test_out}
10
integrated circuit
100
system
1000
baseband circuit
1002
RF transceiver
10020
DAC
10021
ADC
10022
filter
10023
filter
10024
10025
10026
PA
10027
LNA

FIG. 1

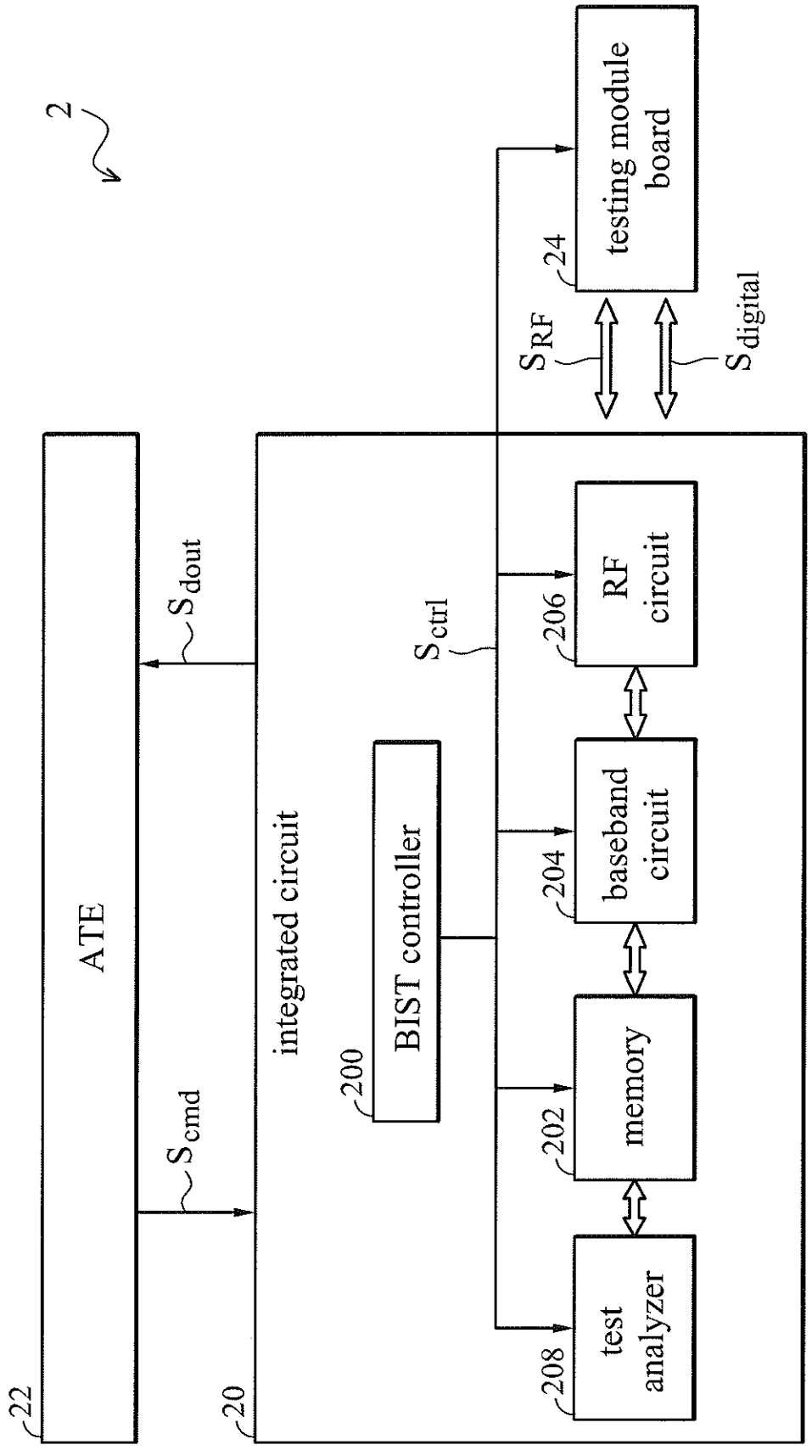
2
ATE
22
integrated circuit
20
S_{cmd}
S_{dout}
S_{ctrl}
BIST controller
200
test analyzer
208
memory
202
baseband circuit
204
RF circuit
206
testing module board
24
S_{RF}
$S_{digital}$

FIG. 2

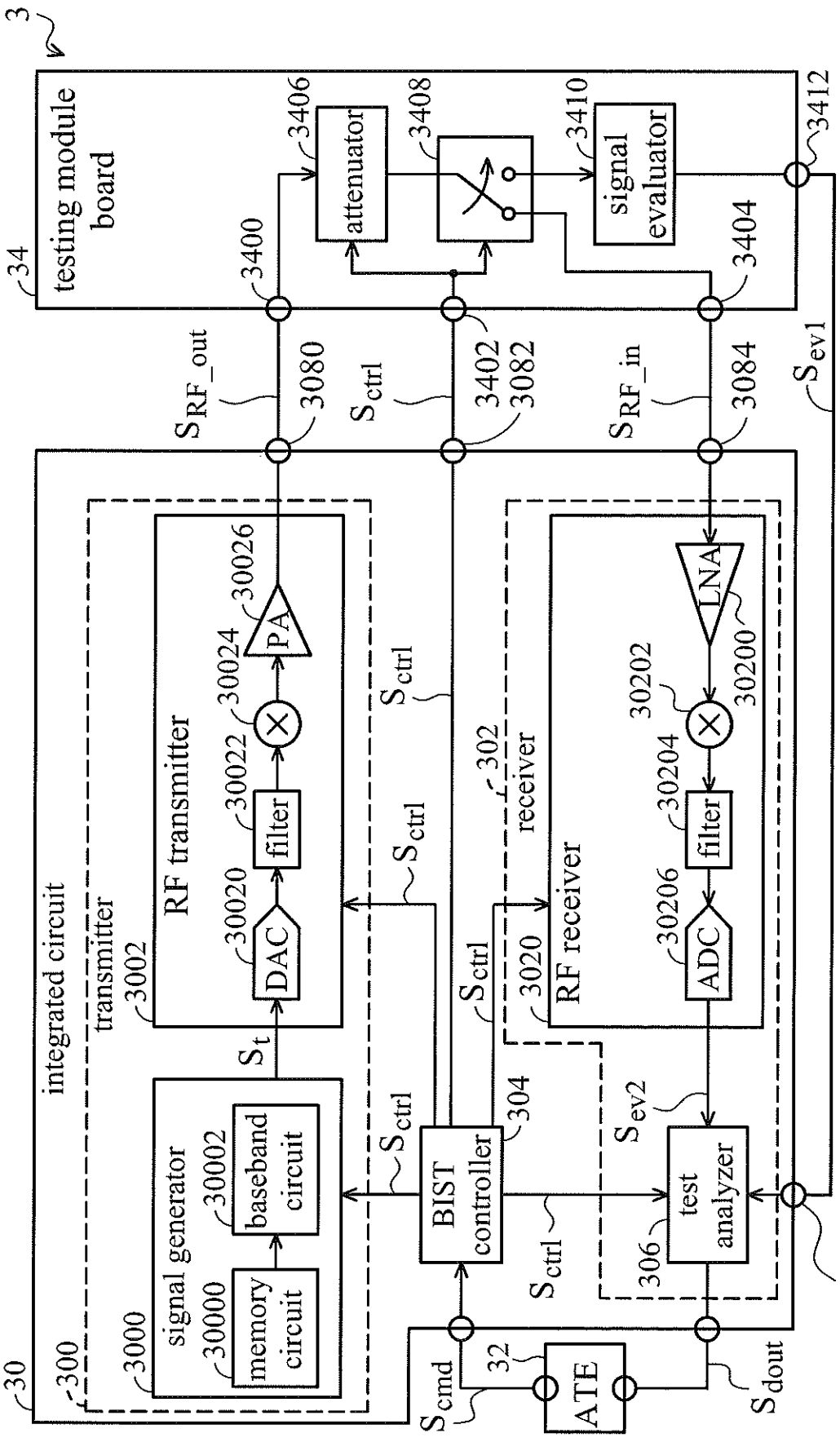
3
testing module board
34
attenuator
3406
3408
signal evaluator
3410
3412
3400
3404
S_{RF_out}
3080
S_{ctrl}
3402
3082
S_{RF_in}
3084
S_{ev1}
integrated circuit
30
300
transmitter
3002
RF transmitter
30026
PA
30024
30022
filter
30020
DAC
S_t
S_{ctrl}
302
receiver
RF receiver
3020
LNA
30200
30202
30204
filter
30206
ADC
signal generator
3000
30000
memory circuit
30002
baseband circuit
BIST controller
304
S_{ctrl}
S_{ev2}
306
test analyzer
3086
S_{cmd}
32
ATE
S_{dout}

FIG. 3

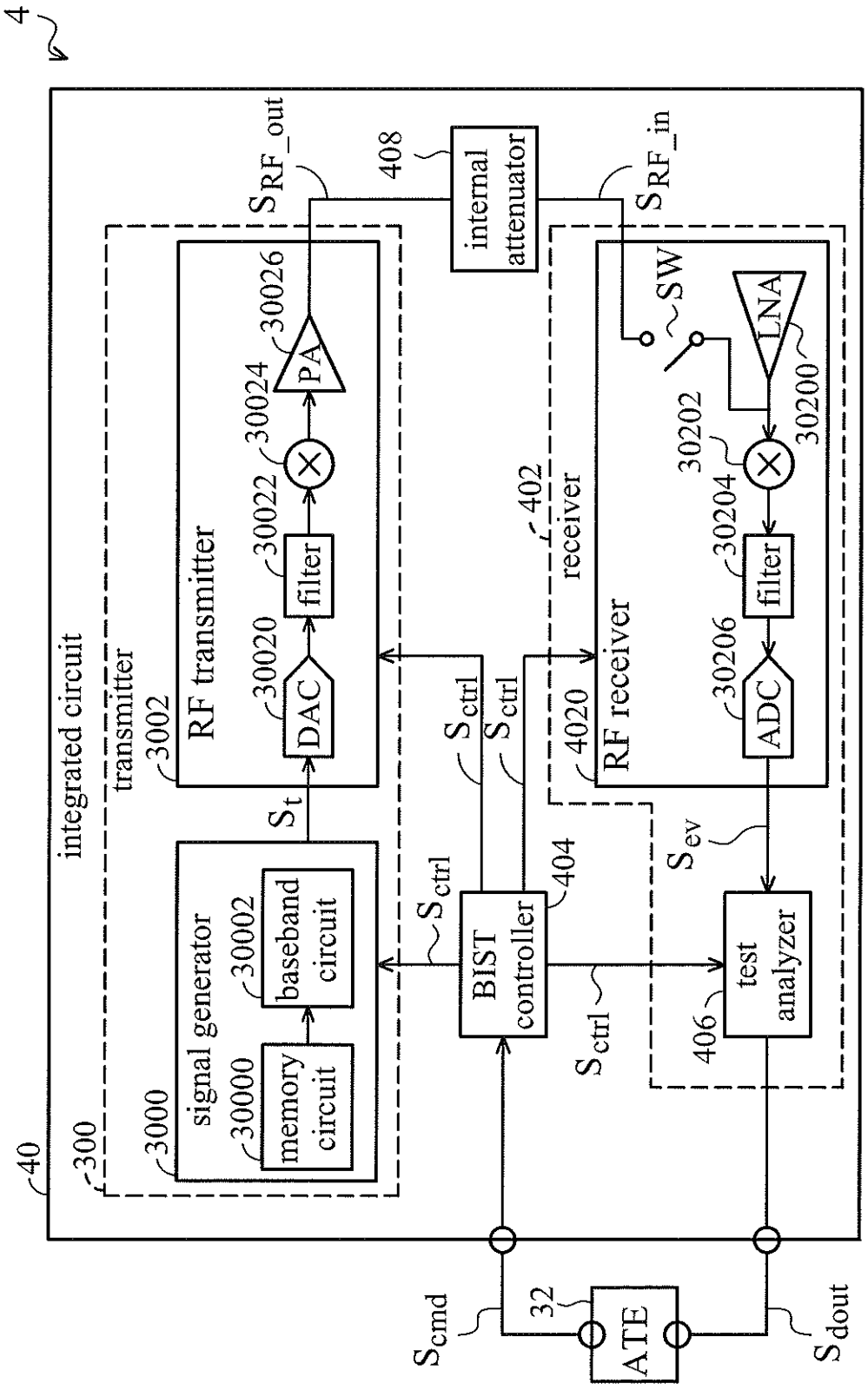
4
40
integrated circuit
300
transmitter
3000
signal generator
30000
memory circuit
30002
baseband circuit
3002
RF transmitter
30020
DAC
30022
filter
30024
30026
PA
S_{RF_out}
408
internal attenuator
S_{RF_in}
SW
402
receiver
4020
RF receiver
30200
LNA
30202
30204
filter
30206
ADC
S_t
S_{ctrl}
S_{ctrl}
S_{ctrl}
S_{ctrl}
404
BIST controller
S_{ev}
406
test analyzer
32
ATE
S_{cmd}
S_{dout}

FIG. 4

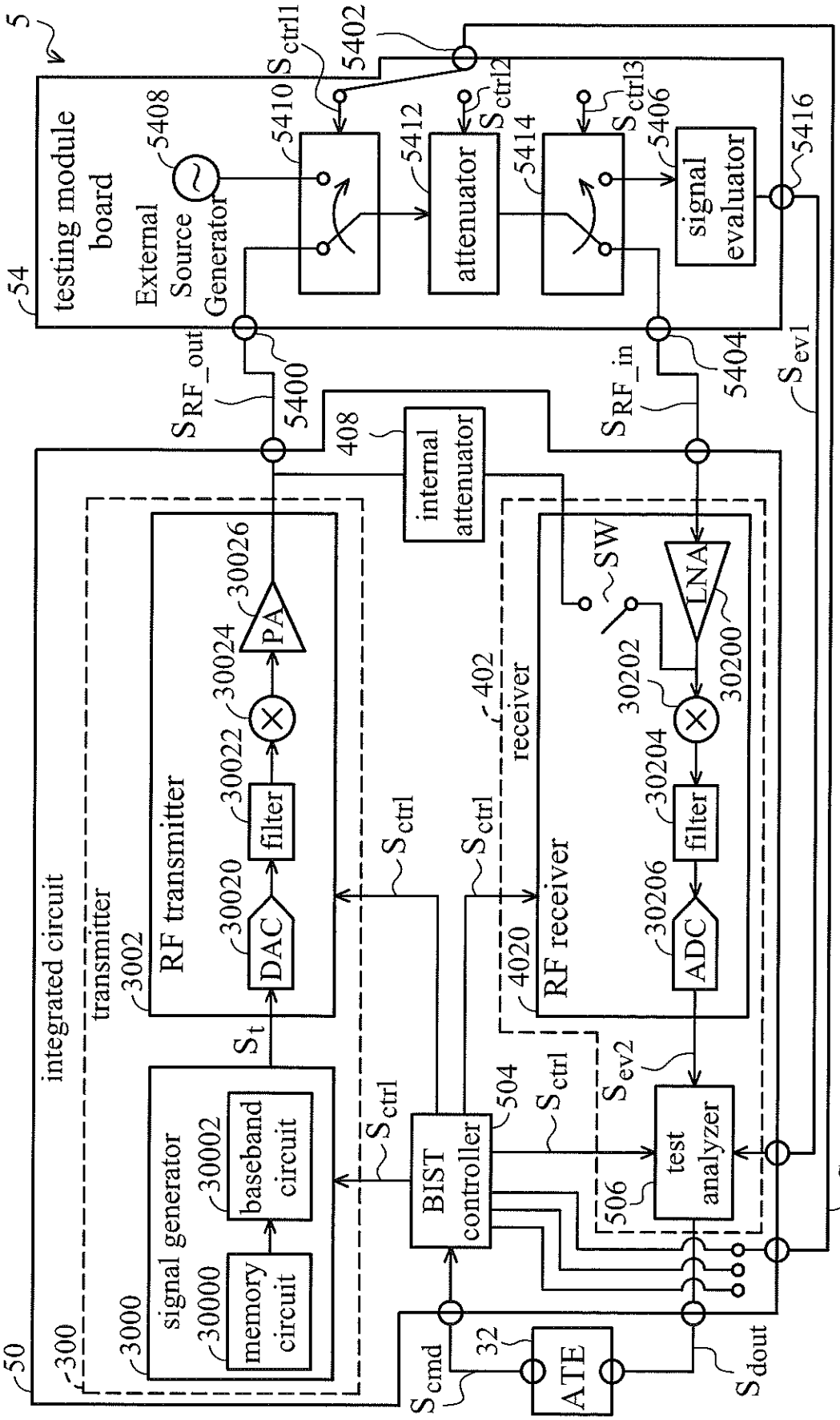
5
testing module board
54
External Source Generator
5408
5410
5412
attenuator
5414
5406
signal evaluator
5416
S_{ctrl1}
5402
S_{ctrl2}
S_{ctrl3}
S_{RF_out}
5400
S_{RF_in}
5404
S_{ev1}
408
internal attenuator
integrated circuit
50
transmitter
300
RF transmitter
3002
signal generator
3000
memory circuit
30000
baseband circuit
30002
DAC
30020
filter
30022
30024
PA
30026
S_t
S_{ctrl}
receiver
402
RF receiver
4020
SW
LNA
30200
30202
30204
filter
30206
ADC
BIST controller
504
506
test analyzer
S_{ev2}
S_{cmd}
32
ATE
S_{dout}

FIG. 5

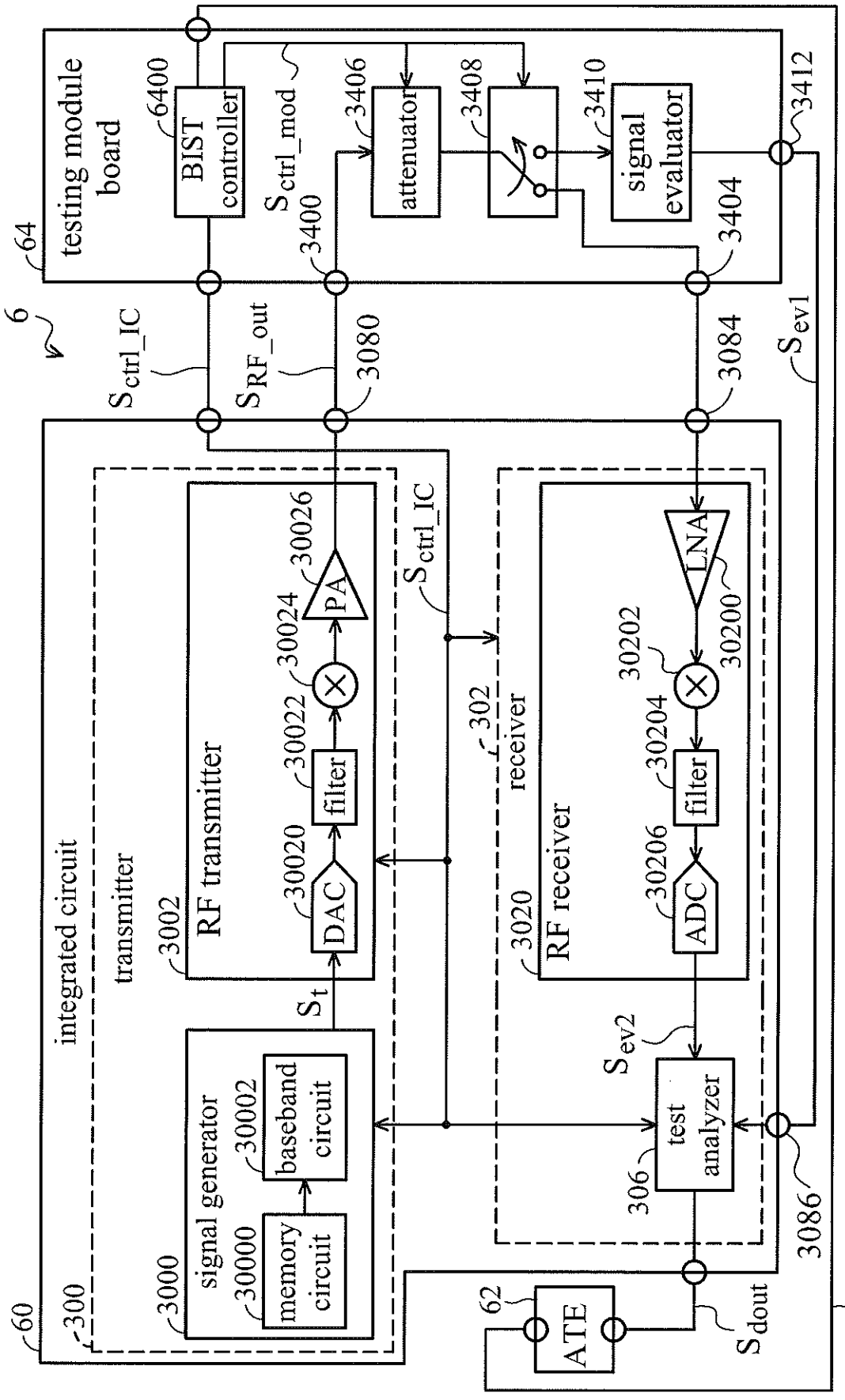
6
64
testing module board
6400
BIST controller
S_{ctrl_mod}
3400
3406
attenuator
3408
3410
signal evaluator
3404
3412
S_{ctrl_IC}
S_{RF_out}
3080
3084
S_{ev1}
integrated circuit
60
300
transmitter
3000
signal generator
30000
memory circuit
30002
baseband circuit
S_t
3002
RF transmitter
30020
DAC
30022
filter
30024
30026
PA
S_{ctrl_IC}
302
receiver
3020
RF receiver
30206
ADC
30204
filter
30202
30200
LNA
S_{ev2}
306
test analyzer
3086
62
ATE
S_{dout}
S_{cmd}

FIG. 6

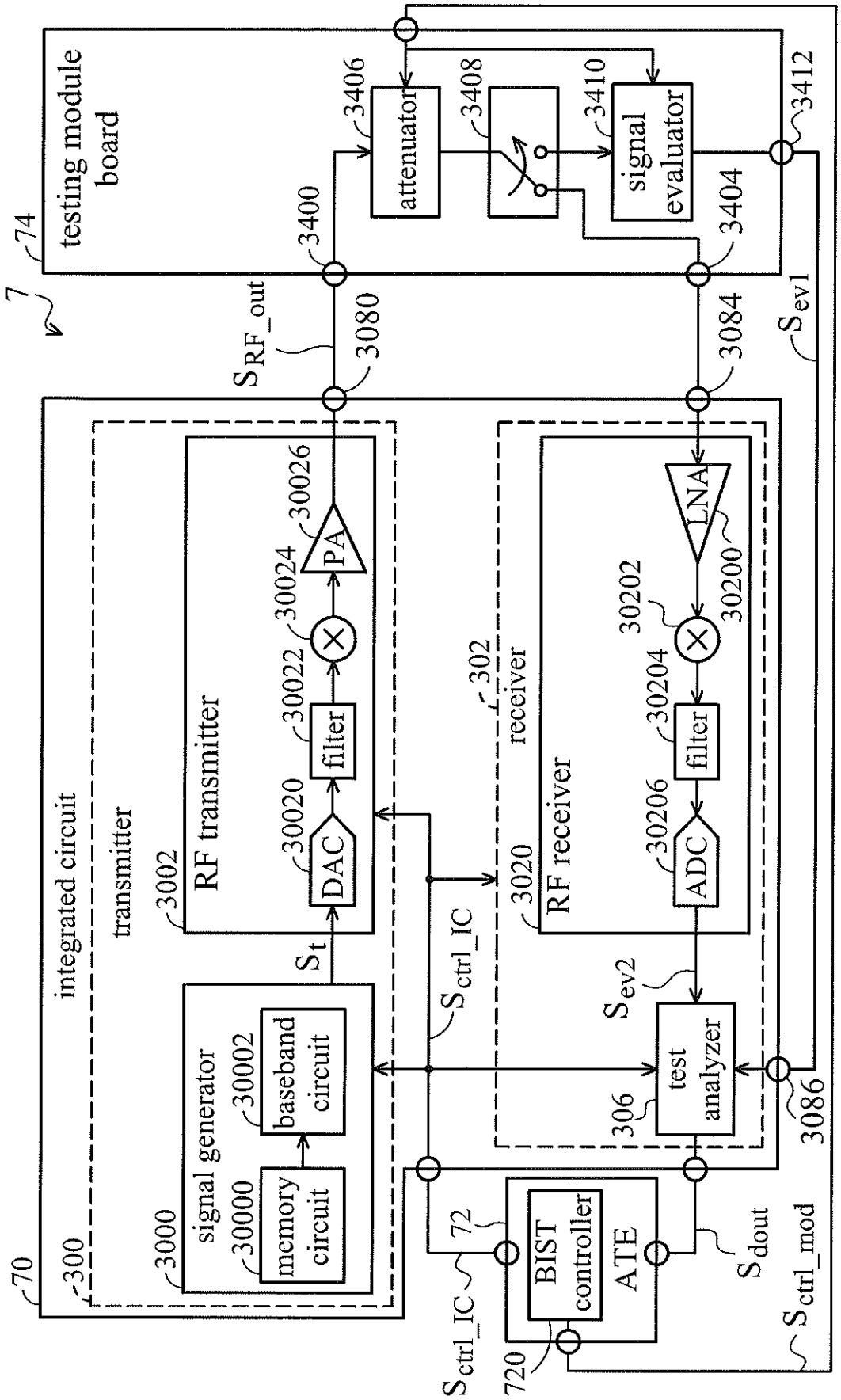
7
74
testing module board
3406
attenuator
3408
3410
signal evaluator
3412
3400
3404
S_{RF_out}
3080
3084
S_{ev1}
integrated circuit
70
300
transmitter
3002
RF transmitter
30026
PA
30024
30022
filter
30020
DAC
S_t
302
receiver
3020
RF receiver
30200
LNA
30202
30204
filter
30206
ADC
S_{ctrl_IC}
S_{ev2}
3000
signal generator
30000
memory circuit
30002
baseband circuit
306
test analyzer
3086
72
BIST controller
ATE
S_{ctrl_IC}
720
S_{dout}
S_{ctrl_mod}

FIG. 7