FIG. 1

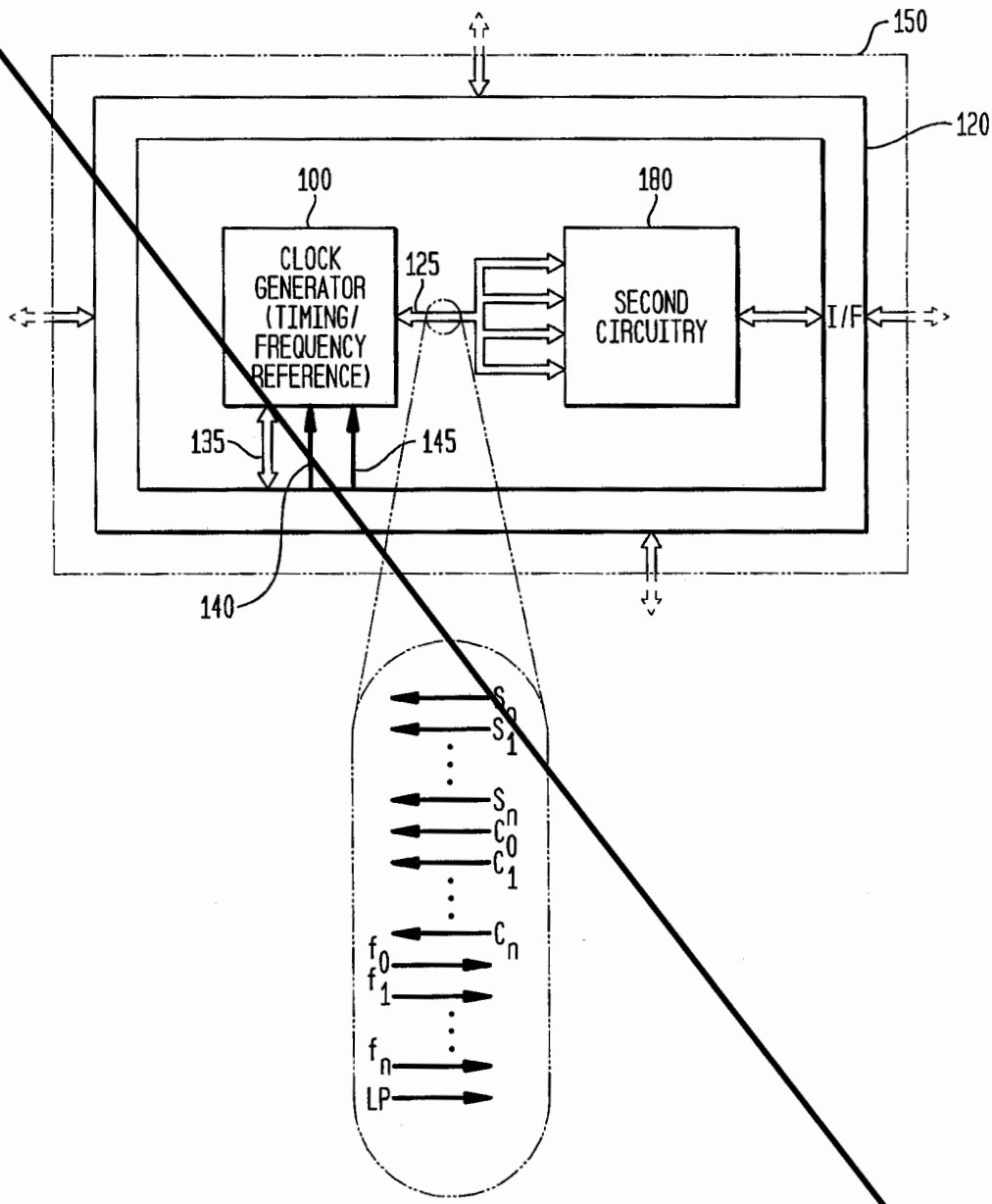
150
120
100
180
CLOCK GENERATOR (TIMING/ FREQUENCY REFERENCE)
125
SECOND CIRCUITRY
I/F
135
145
140
S_0
S_1
S_n
C_0
C_1
C_n
f_0
f_1
f_n
LP

FIG. 2

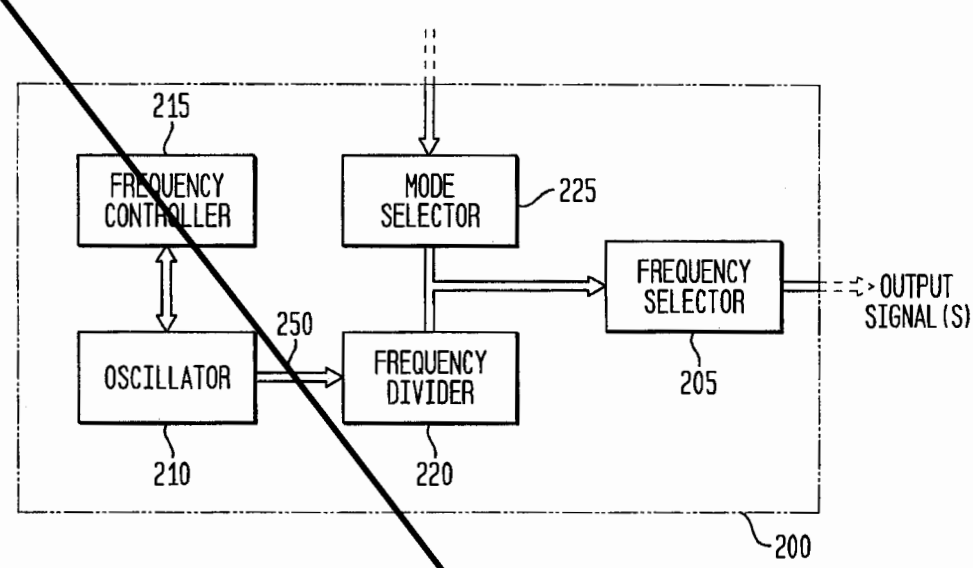
215
FREQUENCY CONTROLLER
MODE SELECTOR
225
FREQUENCY SELECTOR
OUTPUT SIGNAL (S)
250
OSCILLATOR
FREQUENCY DIVIDER
205
210
220
200

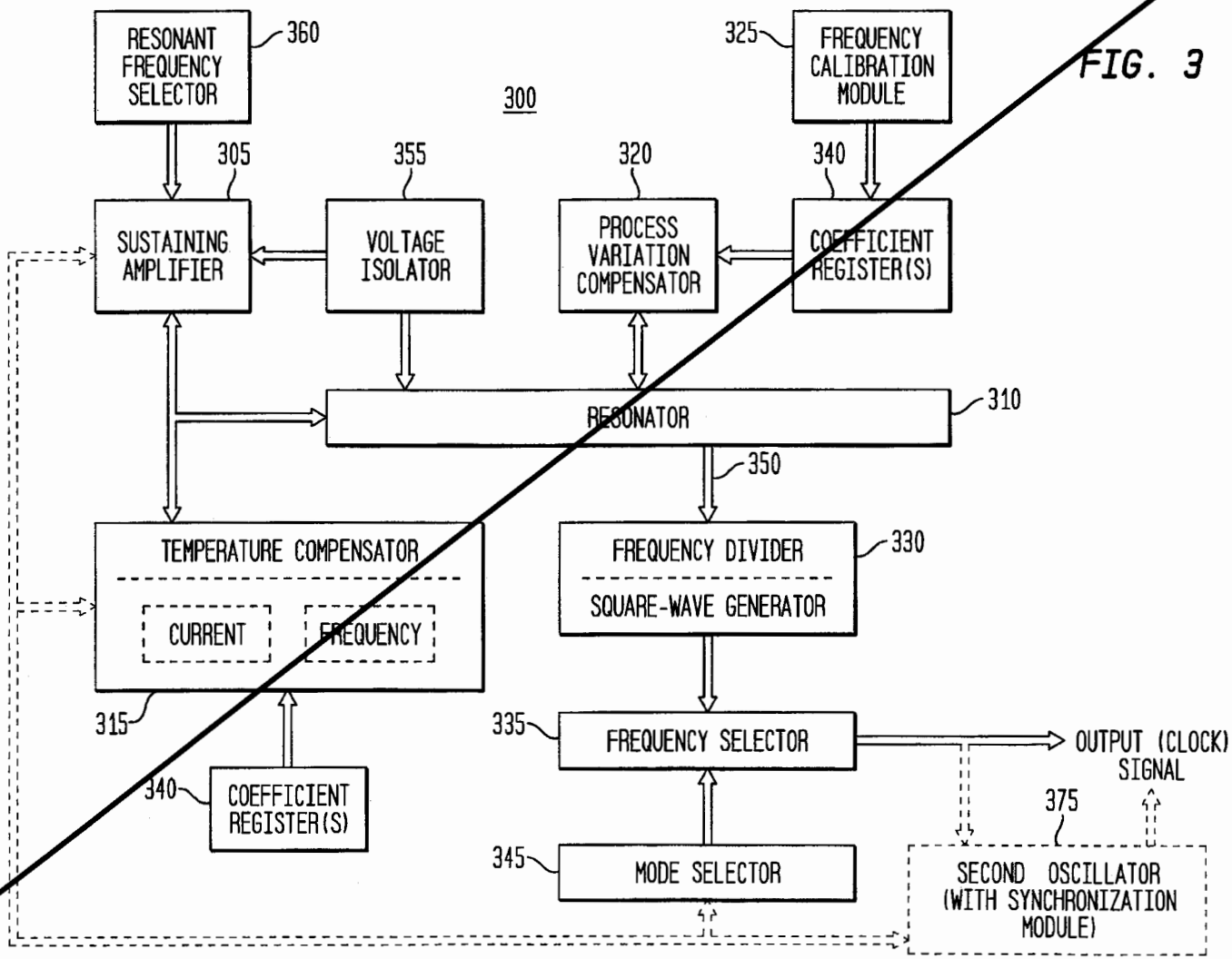
RESONANT FREQUENCY SELECTOR
360
300
325
FREQUENCY CALIBRATION MODULE
305
355
320
340
SUSTAINING AMPLIFIER
VOLTAGE ISOLATOR
PROCESS VARIATION COMPENSATOR
COEFFICIENT REGISTER(S)
RESONATOR
310
350
TEMPERATURE COMPENSATOR
CURRENT
FREQUENCY
315
FREQUENCY DIVIDER
SQUARE-WAVE GENERATOR
330
335
FREQUENCY SELECTOR
OUTPUT (CLOCK) SIGNAL
340
COEFFICIENT REGISTER(S)
375
345
MODE SELECTOR
SECOND OSCILLATOR (WITH SYNCHRONIZATION MODULE)

FIG. 3

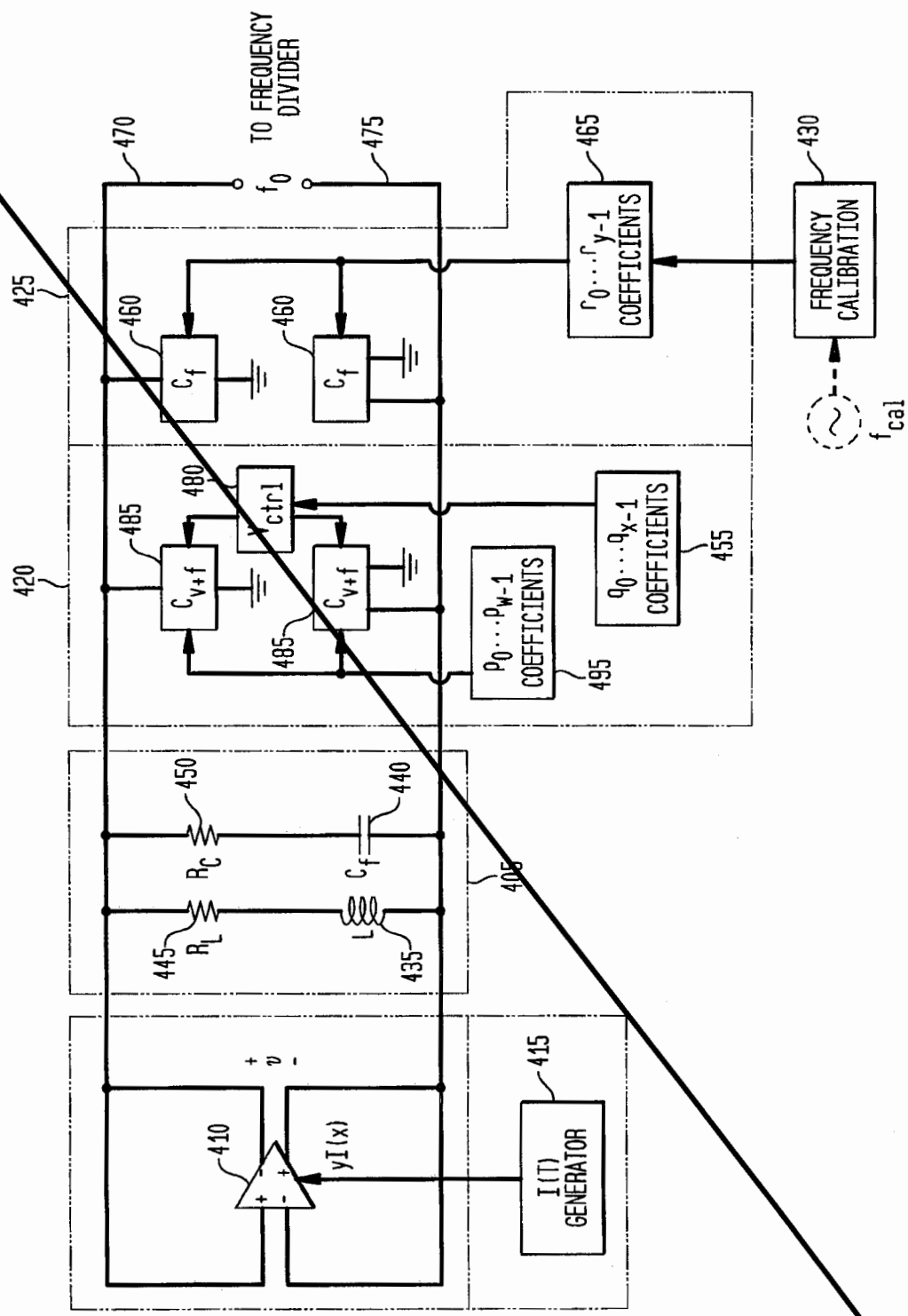
TO FREQUENCY DIVIDER
f_0
470
475
425
460
460
C_f
C_f
$r_0 \cdots r_{y-1}$ COEFFICIENTS
465
FREQUENCY CALIBRATION
430
f_{cal}
420
485
480
V_{ctrl}
485
C_{v+f}
C_{v+f}
$p_0 \cdots p_{w-1}$ COEFFICIENTS
495
$q_0 \cdots q_{x-1}$ COEFFICIENTS
455
450
440
R_C
C_f
405
445
R_L
L
435
+ v -
410
yI(x)
415
I(T) GENERATOR

FIG. 4

FIG. 5A

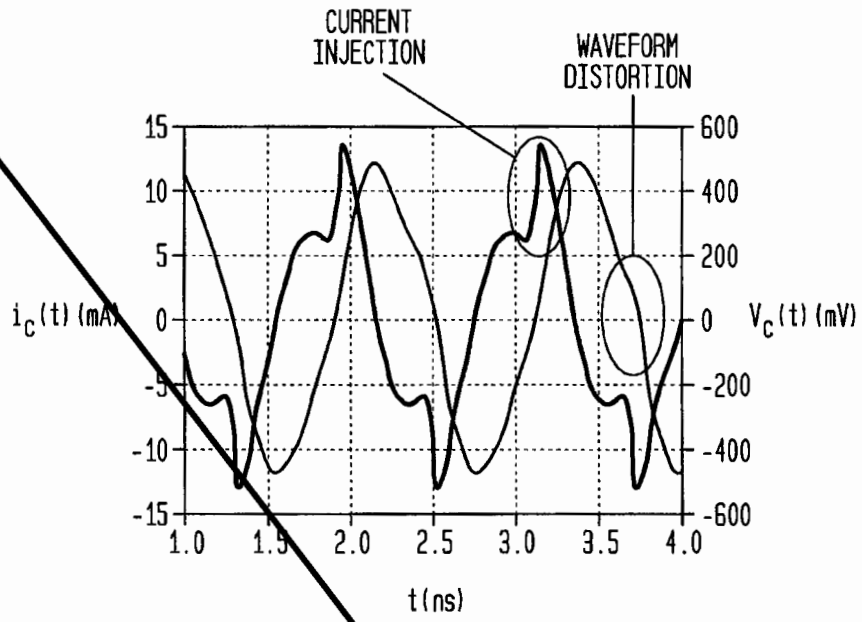

FIG. 5B

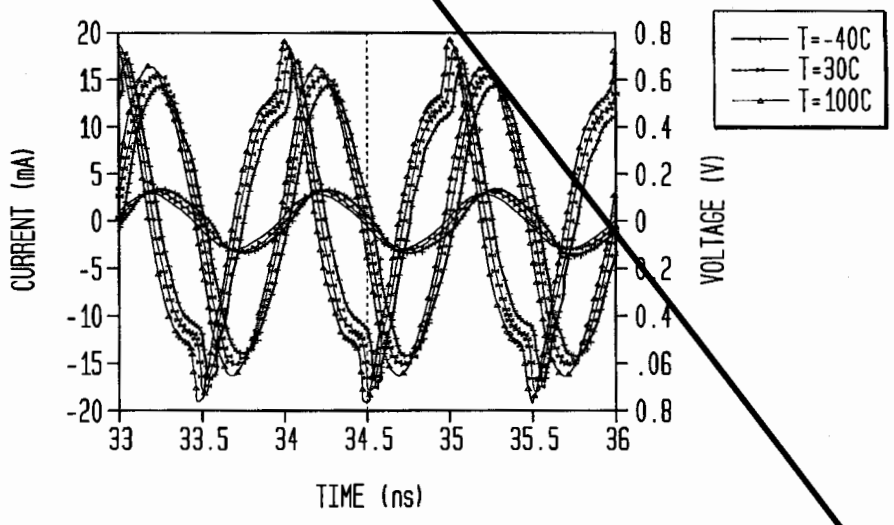

TEMPERATURE/BIAS DEPENDENCE

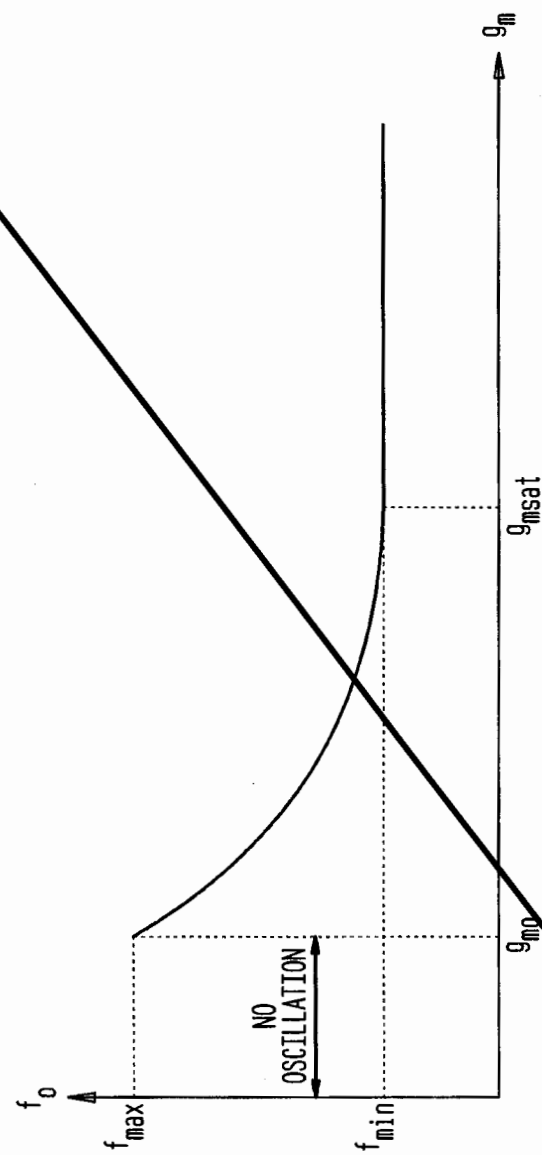

FIG. 5C

FIG. 6

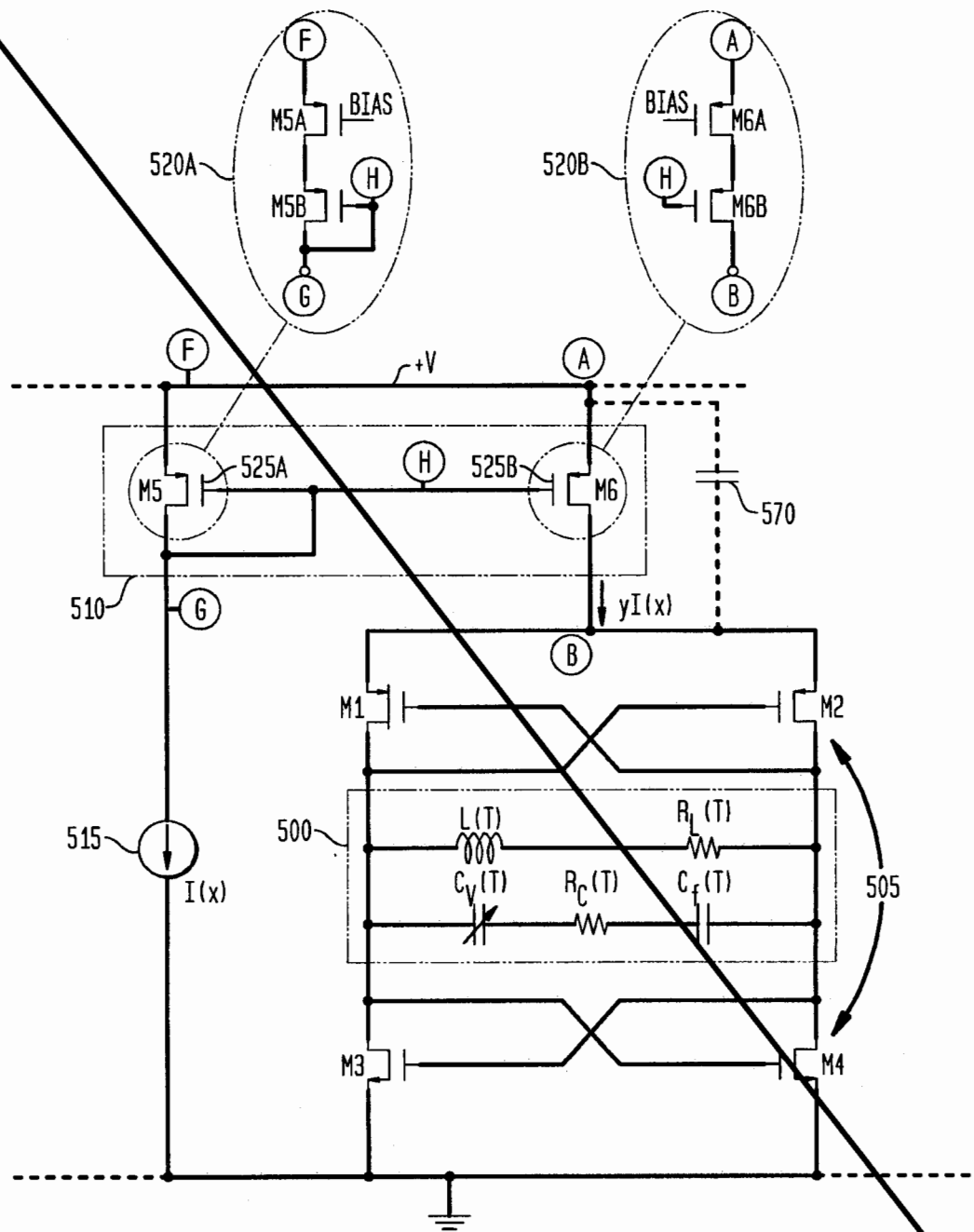
F
M5A
BIAS
520A
H
M5B
G
A
BIAS
M6A
520B
H
M6B
B
F
+V
A
M5
525A
H
525B
M6
570
510
G
yI(x)
B
M1
M2
515
I(x)
500
L(T)
R_L(T)
C_V(T)
R_C(T)
C_f(T)
505
M3
M4

FIG. 7A

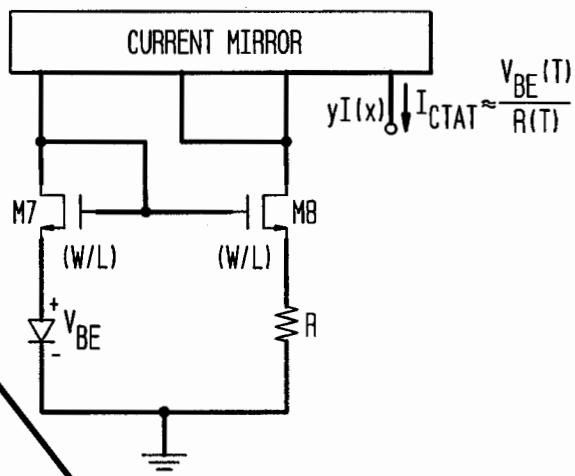
CURRENT MIRROR
yI(x)
$I_{CTAT} \approx \frac{V_{BE}(T)}{R(T)}$
M7
M8
(W/L)
(W/L)
V_{BE}
R

FIG. 7B

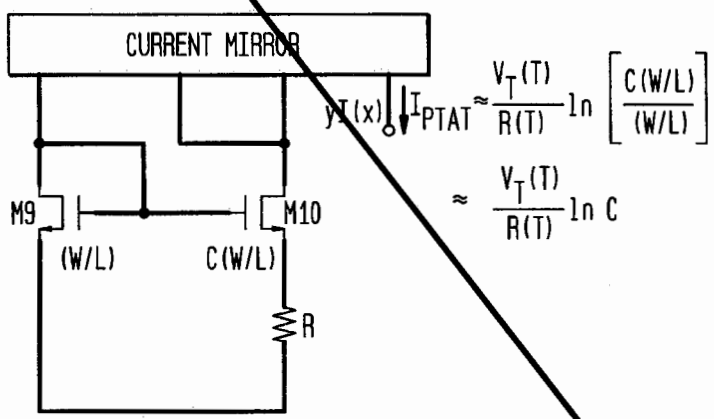
CURRENT MIRROR
yI(x)
$I_{PTAT} \approx \frac{V_T(T)}{R(T)} \ln \left[\frac{C(W/L)}{(W/L)}\right]$
$\approx \frac{V_T(T)}{R(T)} \ln C$
M9
M10
(W/L)
C(W/L)
R

FIG. 7C

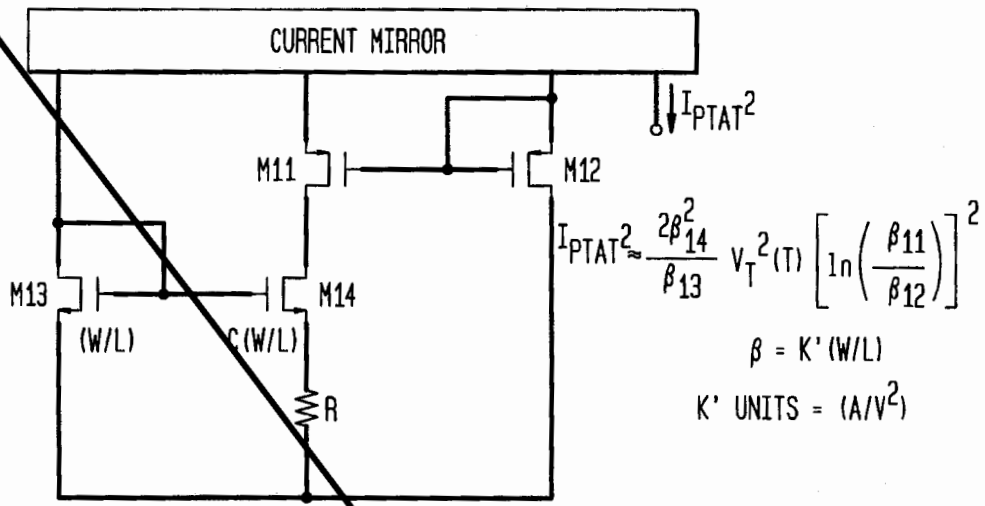
CURRENT MIRROR
I_{PTAT}^2
M11
M12
M13
M14
(W/L)
C(W/L)
R
$I_{PTAT}^2 \approx \frac{2\beta_{14}^2}{\beta_{13}} V_T^2(T) \left[\ln\left(\frac{\beta_{11}}{\beta_{12}}\right)\right]^2$
$\beta = K'(W/L)$
K' UNITS = (A/V^2)

FIG. 7D

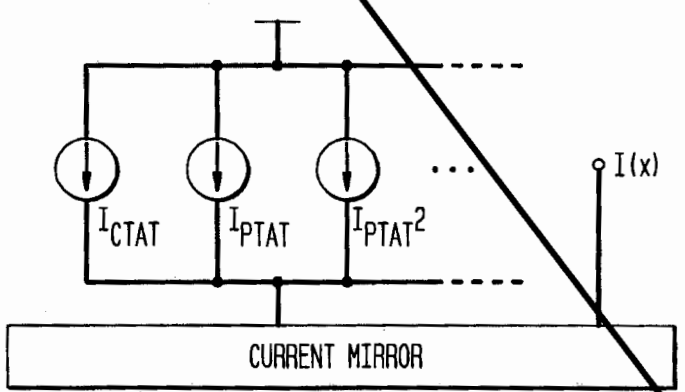
I_{CTAT}
I_{PTAT}
I_{PTAT}^2
I(x)
CURRENT MIRROR

FIG. 8

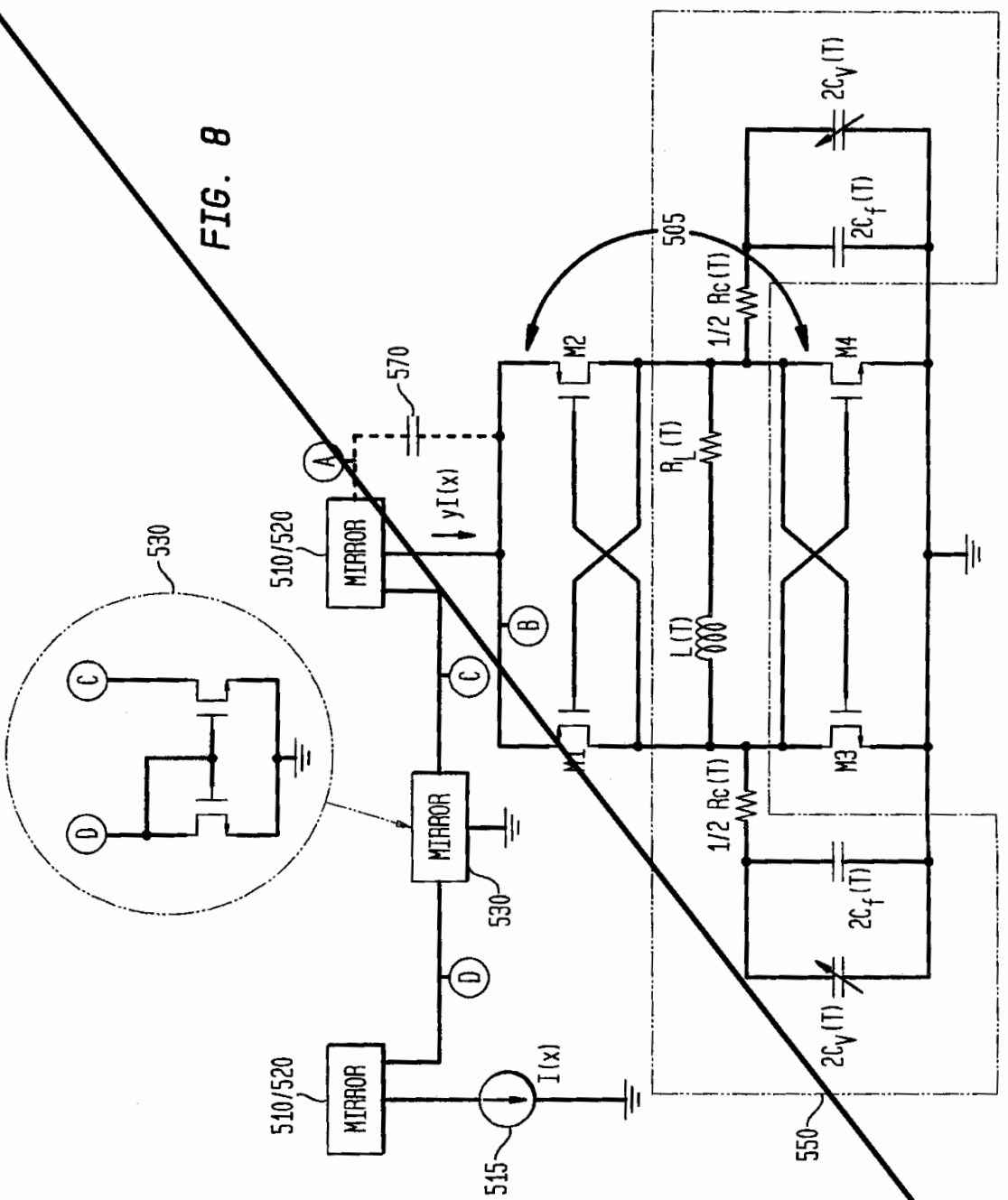
505
570
530
510/520
MIRROR
yI(x)
I(x)
515
550
M1
M2
M3
M4
R_L(T)
L(T)
1/2 Rc(T)
$2C_f$(T)
$2C_v$(T)
A
B
C
D

FIG. 9

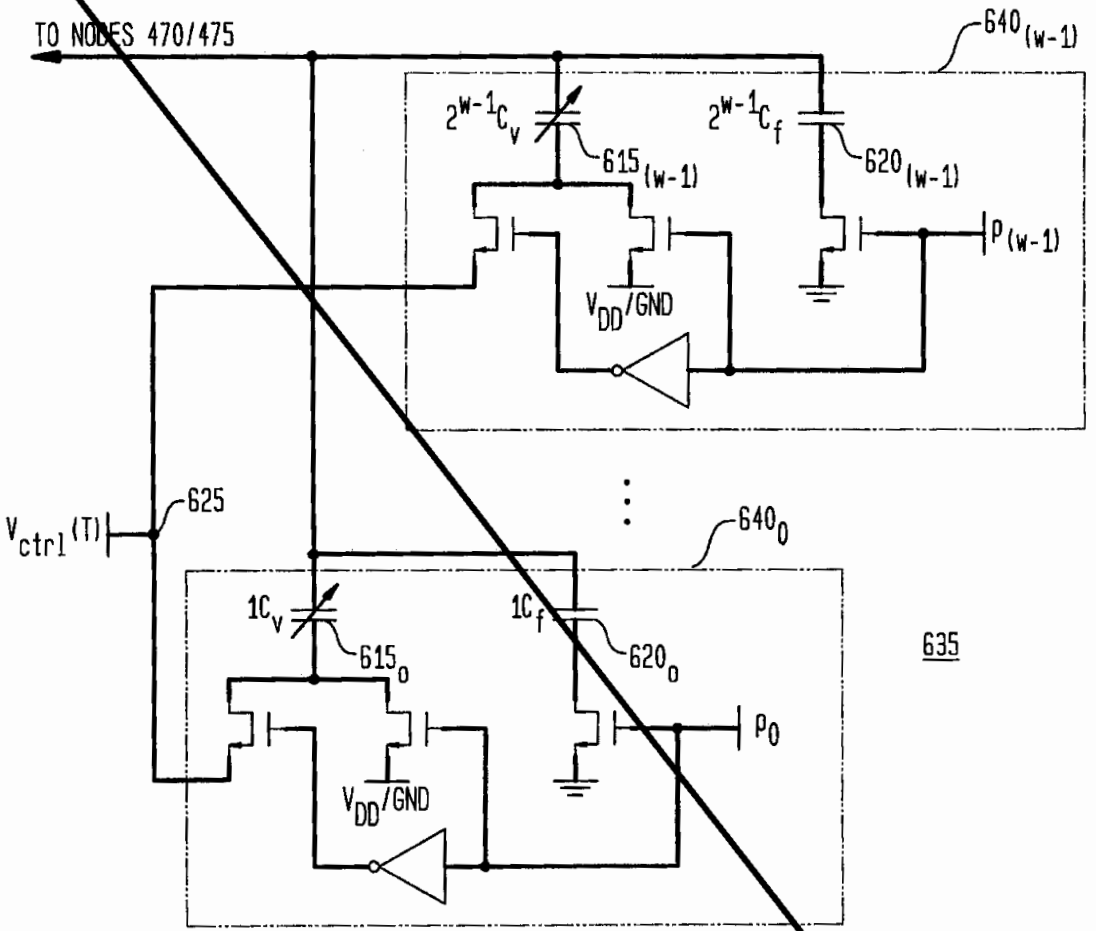
TO NODES 470/475
640(w-1)
2w-1Cv
2w-1Cf
615(w-1)
620(w-1)
P(w-1)
VDD/GND
Vctrl(T)
625
640o
1Cv
1Cf
615o
620o
Po
VDD/GND
635

FIG. 10

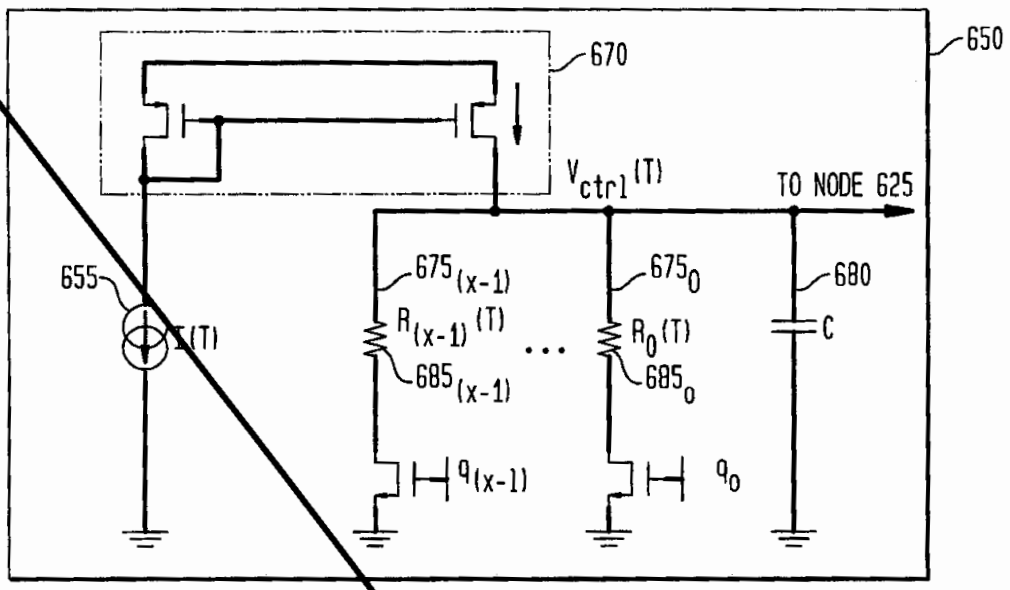
650
670
$V_{ctrl}(T)$
TO NODE 625
655
I(T)
$675_{(x-1)}$
$R_{(x-1)}(T)$
$685_{(x-1)}$
675_0
$R_0(T)$
685_0
680
C
$q_{(x-1)}$
q_0

FIG. 11

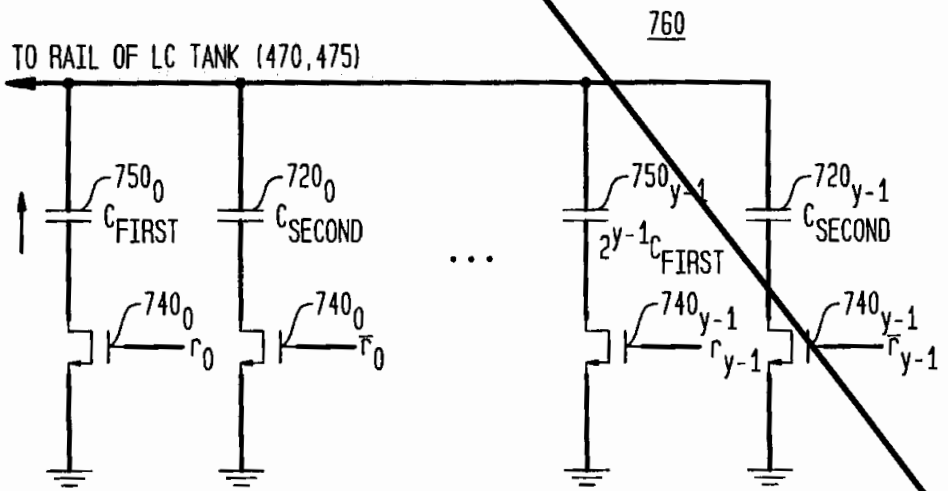
760
TO RAIL OF LC TANK (470,475)
750_0
C_{FIRST}
720_0
C_{SECOND}
750_{y-1}
$2^{y-1}C_{FIRST}$
720_{y-1}
C_{SECOND}
740_0
r_0
740_0
r_0
740_{y-1}
r_{y-1}
740_{y-1}
r_{y-1}

FIG. 12

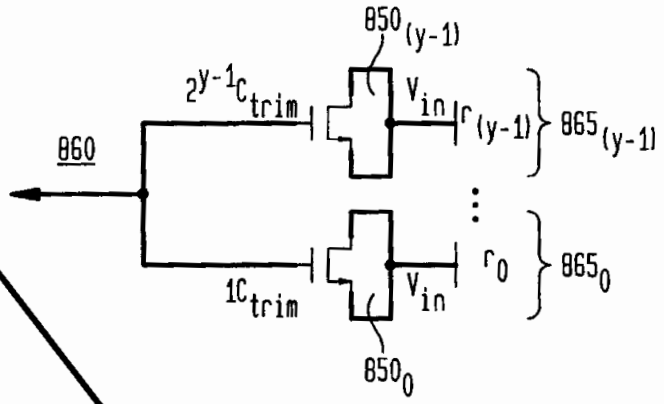
850(y-1)
2y-1Ctrim
Vin
r(y-1)
865(y-1)
860
1Ctrim
Vin
r0
865₀
850₀

FIG. 13

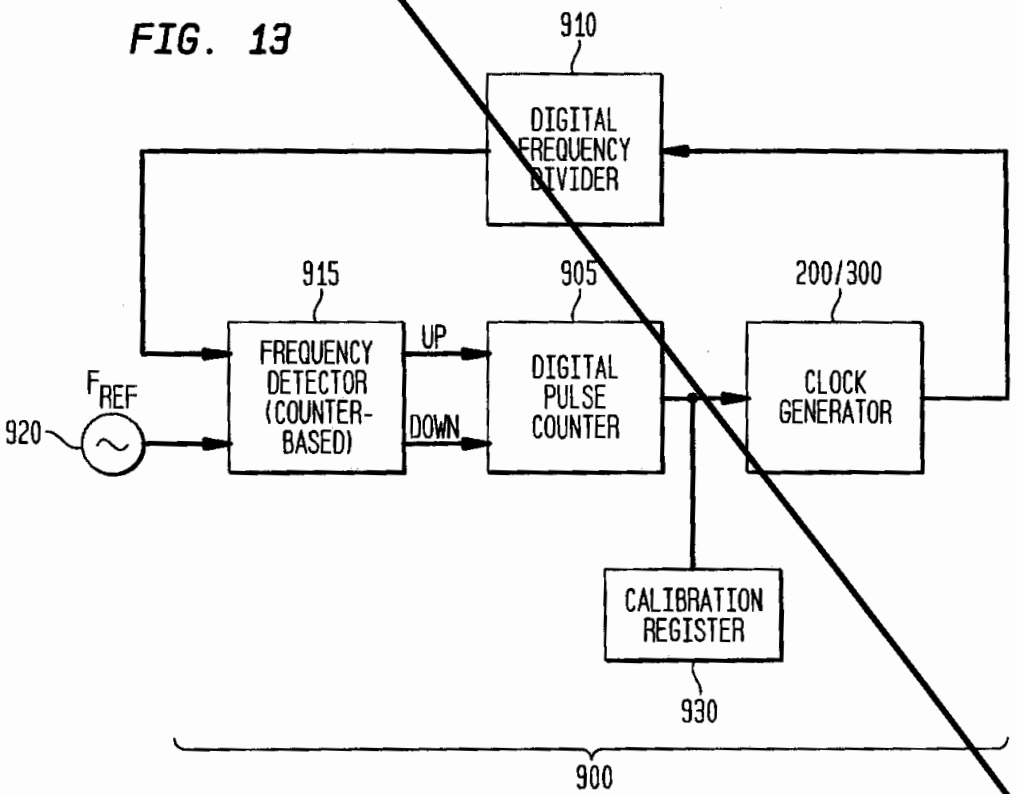
910
DIGITAL FREQUENCY DIVIDER
915
905
200/300
FREQUENCY DETECTOR (COUNTER-BASED)
UP
DOWN
DIGITAL PULSE COUNTER
CLOCK GENERATOR
FREF
920
CALIBRATION REGISTER
930
900

FIG. 14

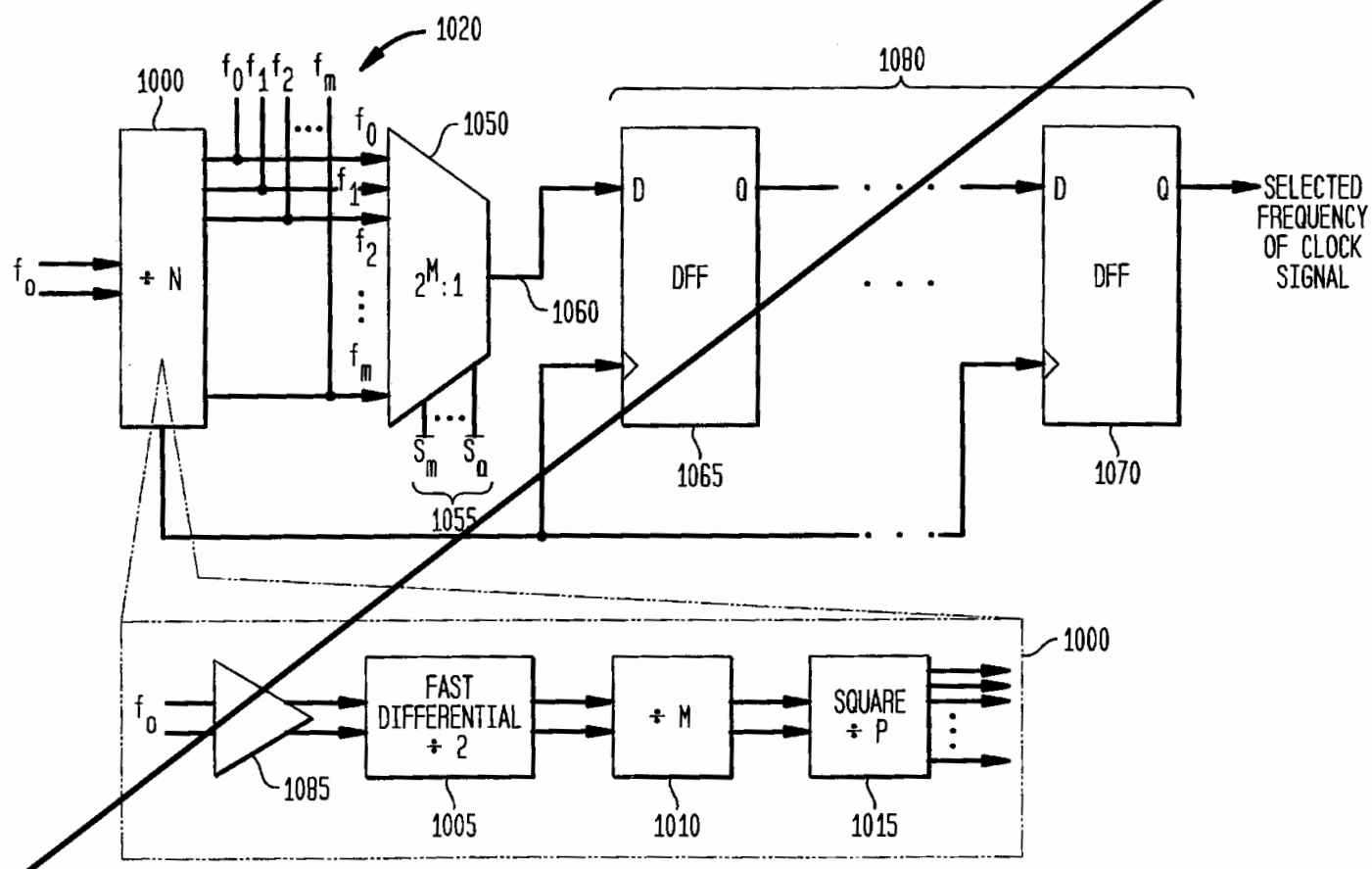
1020
1000
f_0 f_1 f_2 f_m
f_0
÷ N
1050
f_0
f_1
f_2
f_m
$2^M:1$
S_m S_0
1055
1060
1080
D
Q
DFF
1065
D
Q
DFF
1070
SELECTED FREQUENCY OF CLOCK SIGNAL
1000
f_0
1085
FAST DIFFERENTIAL ÷ 2
1005
÷ M
1010
SQUARE ÷ P
1015

FIG. 15A

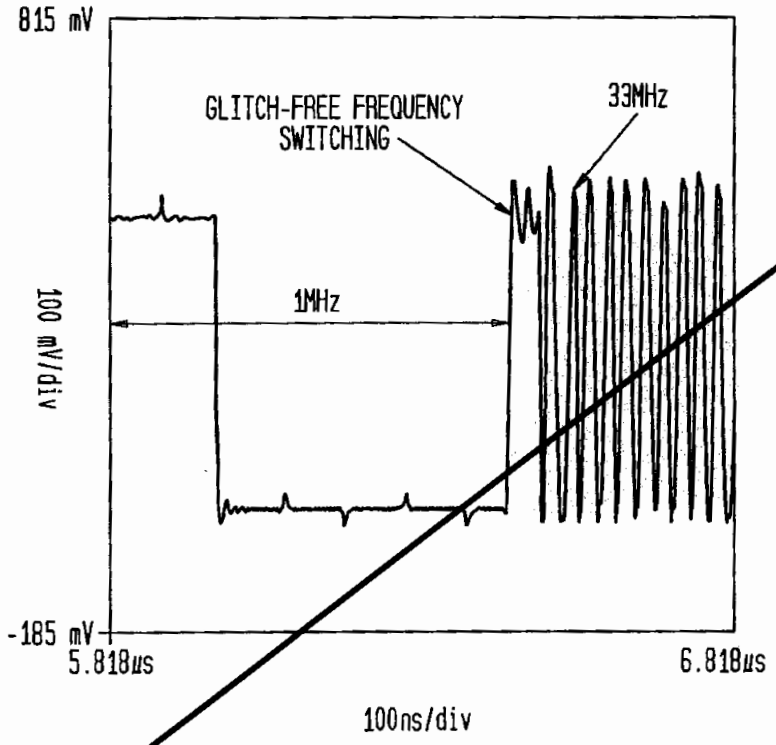

FIG. 15B

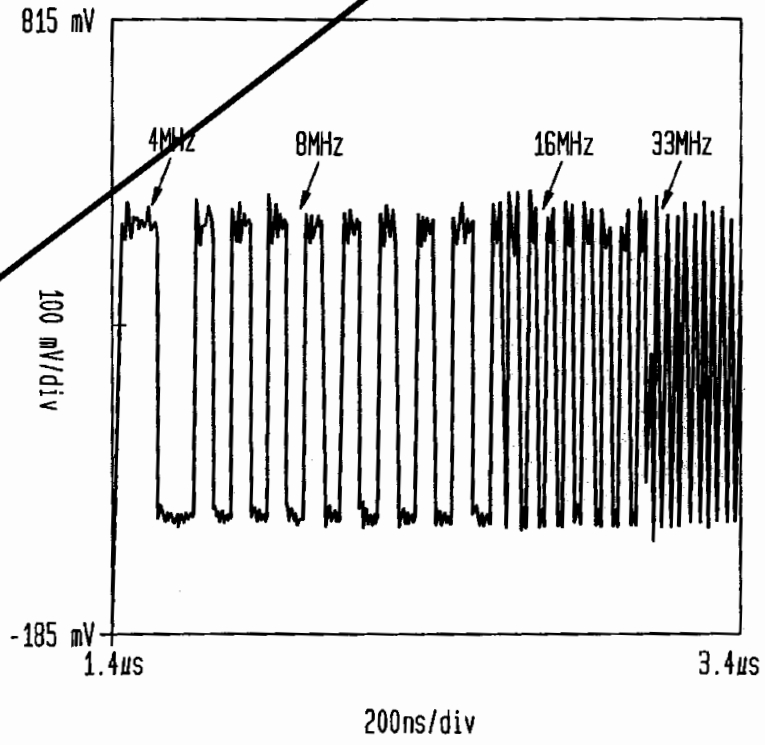

FIG. 16

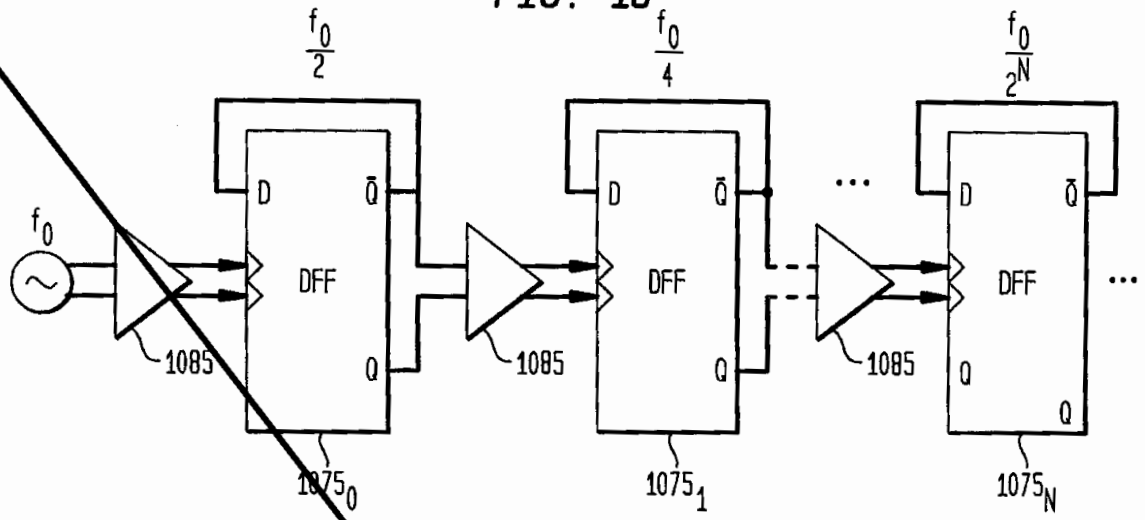

FIG. 17

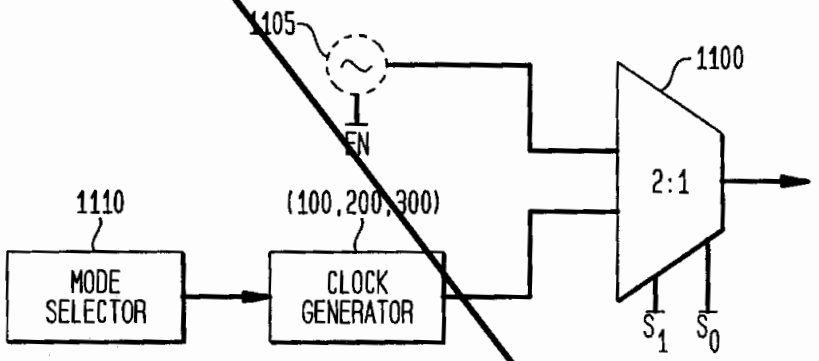

FIG. 18

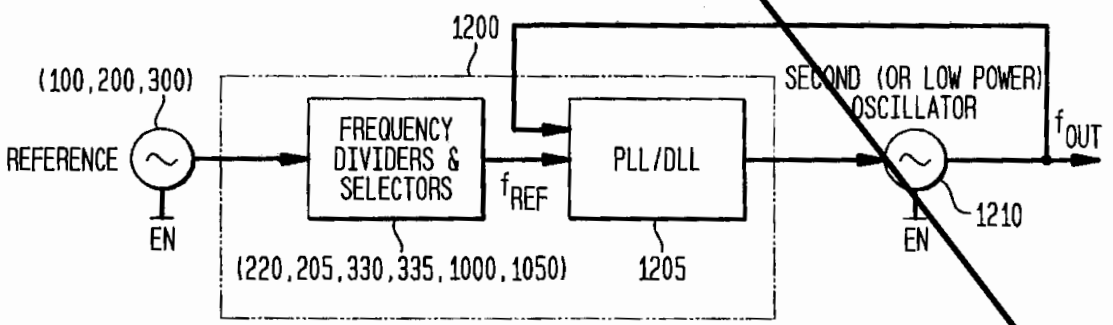

FIG. 19

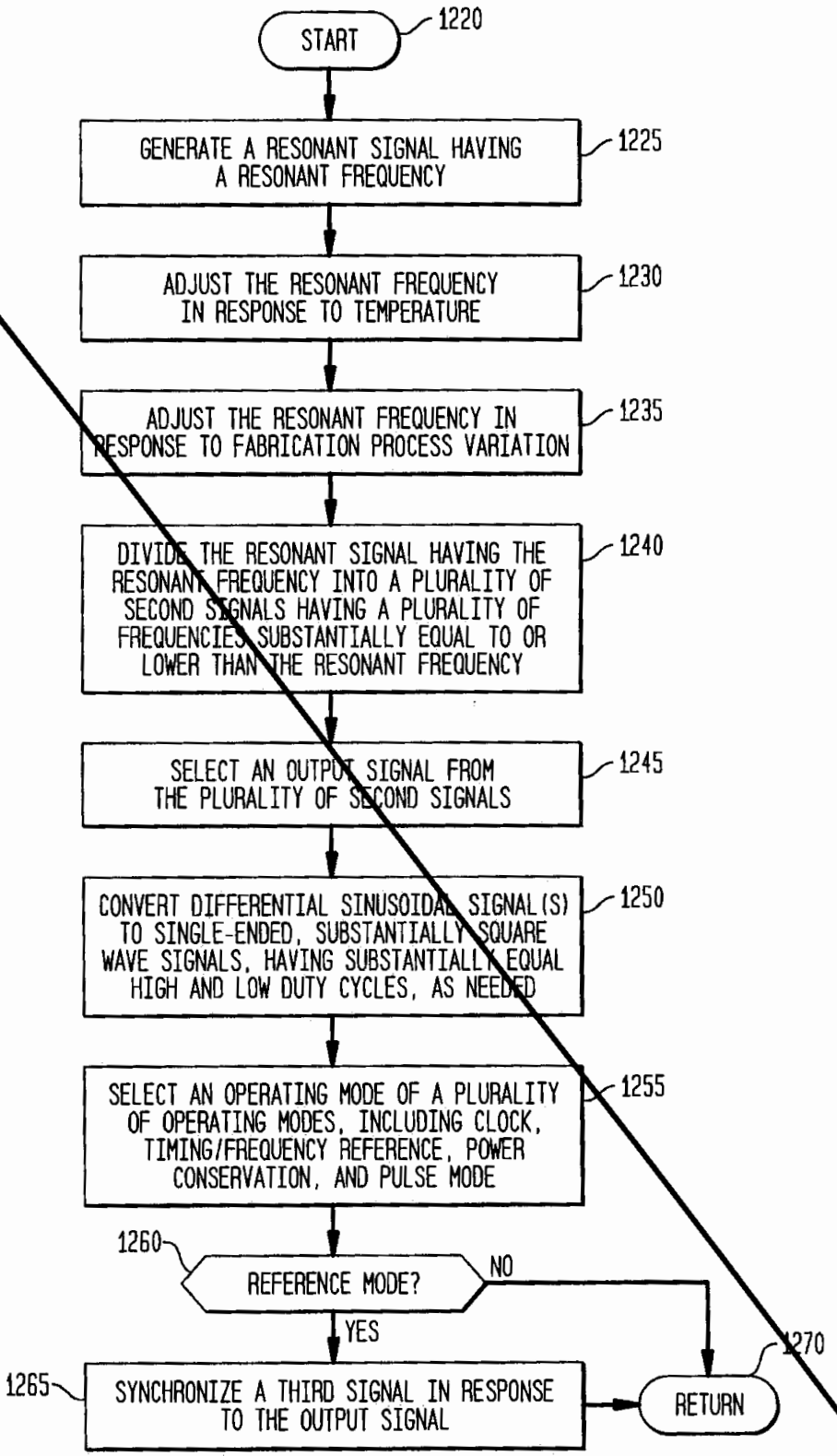
START
1220
GENERATE A RESONANT SIGNAL HAVING A RESONANT FREQUENCY
1225
ADJUST THE RESONANT FREQUENCY IN RESPONSE TO TEMPERATURE
1230
ADJUST THE RESONANT FREQUENCY IN RESPONSE TO FABRICATION PROCESS VARIATION
1235
DIVIDE THE RESONANT SIGNAL HAVING THE RESONANT FREQUENCY INTO A PLURALITY OF SECOND SIGNALS HAVING A PLURALITY OF FREQUENCIES SUBSTANTIALLY EQUAL TO OR LOWER THAN THE RESONANT FREQUENCY
1240
SELECT AN OUTPUT SIGNAL FROM THE PLURALITY OF SECOND SIGNALS
1245
CONVERT DIFFERENTIAL SINUSOIDAL SIGNAL(S) TO SINGLE-ENDED, SUBSTANTIALLY SQUARE WAVE SIGNALS, HAVING SUBSTANTIALLY EQUAL HIGH AND LOW DUTY CYCLES, AS NEEDED
1250
SELECT AN OPERATING MODE OF A PLURALITY OF OPERATING MODES, INCLUDING CLOCK, TIMING/FREQUENCY REFERENCE, POWER CONSERVATION, AND PULSE MODE
1255
1260
REFERENCE MODE?
NO
YES
1265
SYNCHRONIZE A THIRD SIGNAL IN RESPONSE TO THE OUTPUT SIGNAL
RETURN
1270

FIG. 1

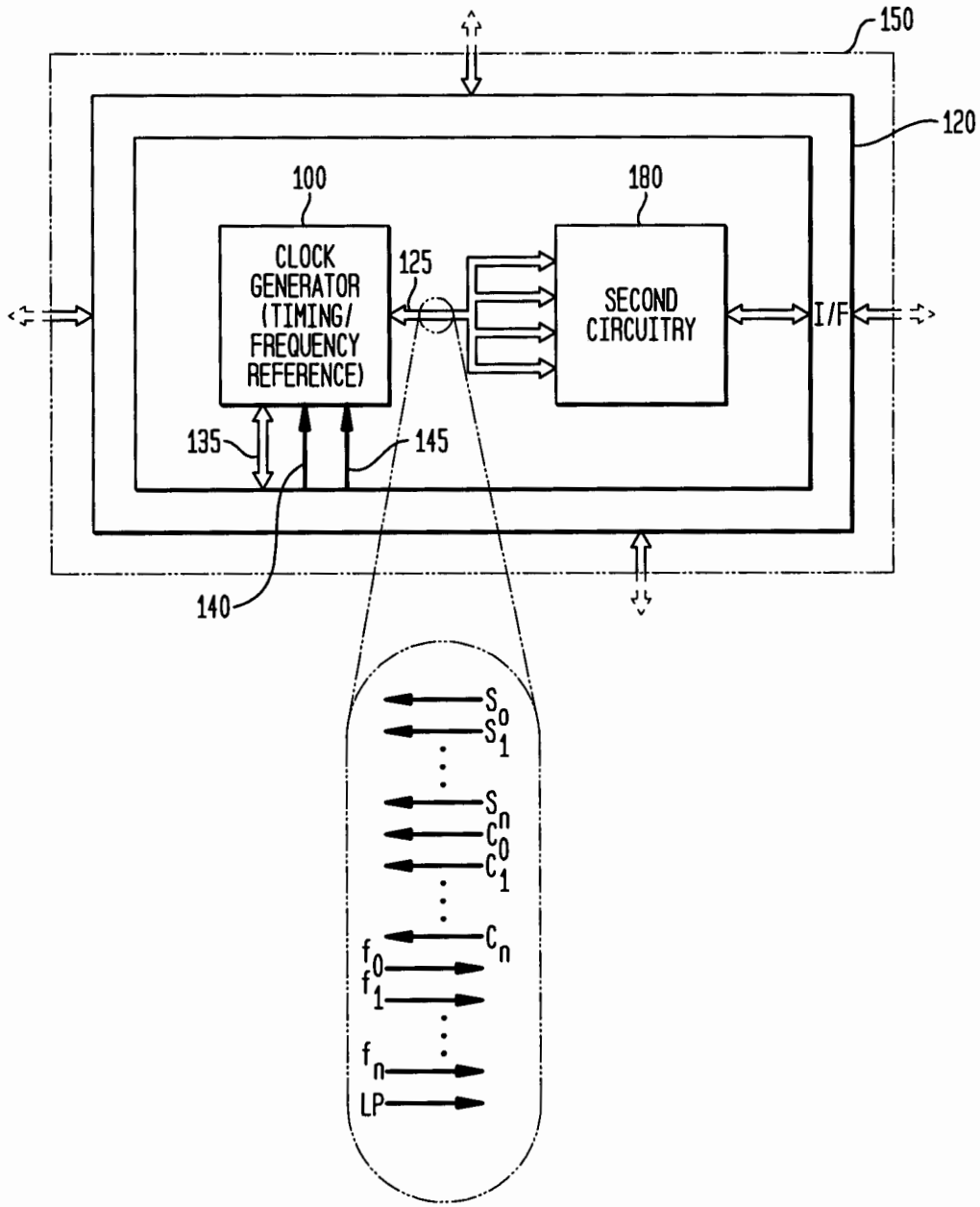
150
120
100
180
CLOCK GENERATOR (TIMING/ FREQUENCY REFERENCE)
125
SECOND CIRCUITRY
I/F
135
145
140
S_0
S_1
S_n
C_0
C_1
C_n
f_0
f_1
f_n
LP

FIG. 2

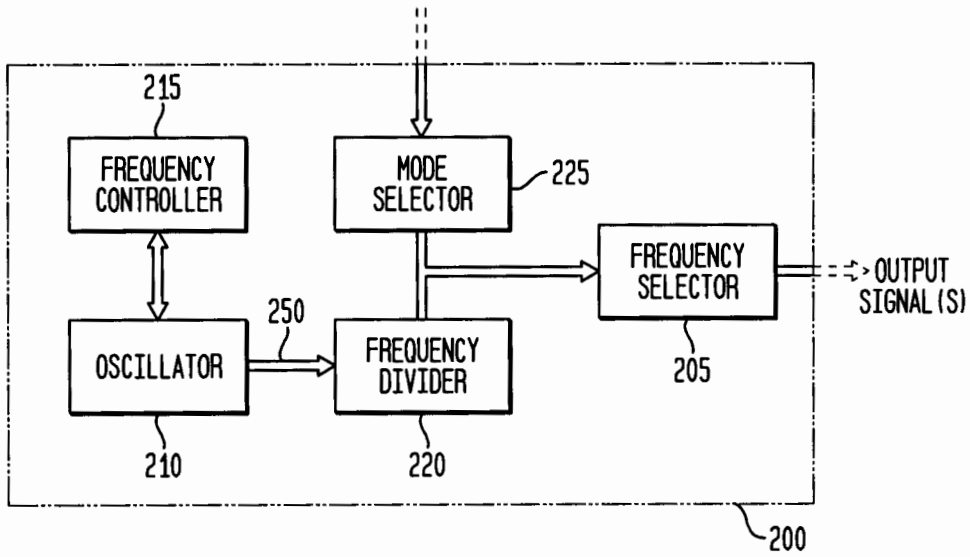
215
FREQUENCY CONTROLLER
MODE SELECTOR
225
FREQUENCY SELECTOR
OUTPUT SIGNAL(S)
250
OSCILLATOR
FREQUENCY DIVIDER
205
210
220
200

FIG. 3

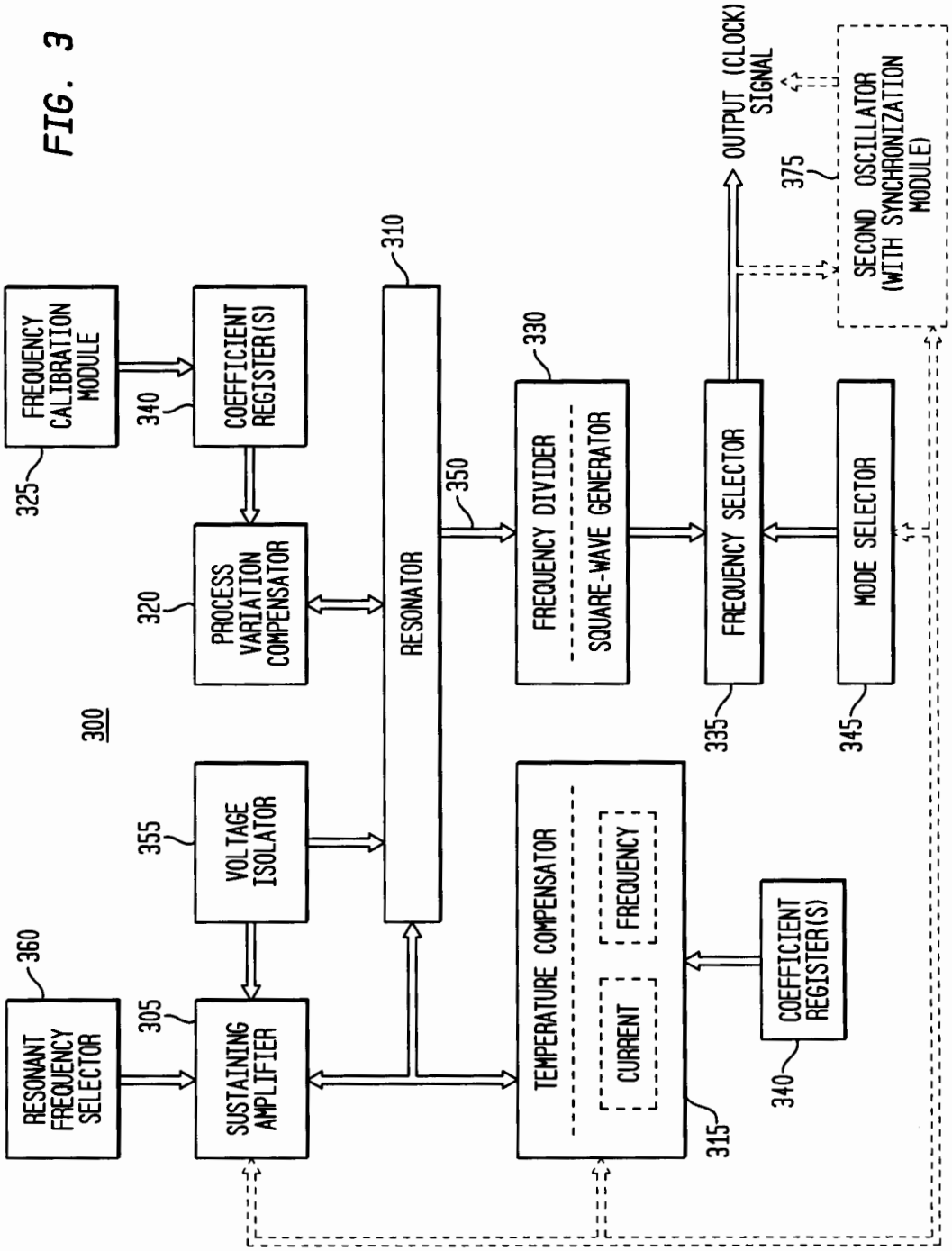
300
RESONANT FREQUENCY SELECTOR
360
SUSTAINING AMPLIFIER
305
VOLTAGE ISOLATOR
355
PROCESS VARIATION COMPENSATOR
320
FREQUENCY CALIBRATION MODULE
325
COEFFICIENT REGISTER(S)
340
RESONATOR
310
350
TEMPERATURE COMPENSATOR
CURRENT
FREQUENCY
315
COEFFICIENT REGISTER(S)
340
FREQUENCY DIVIDER
SQUARE-WAVE GENERATOR
330
FREQUENCY SELECTOR
335
MODE SELECTOR
345
OUTPUT (CLOCK) SIGNAL
375
SECOND OSCILLATOR (WITH SYNCHRONIZATION MODULE)

FIG. 4

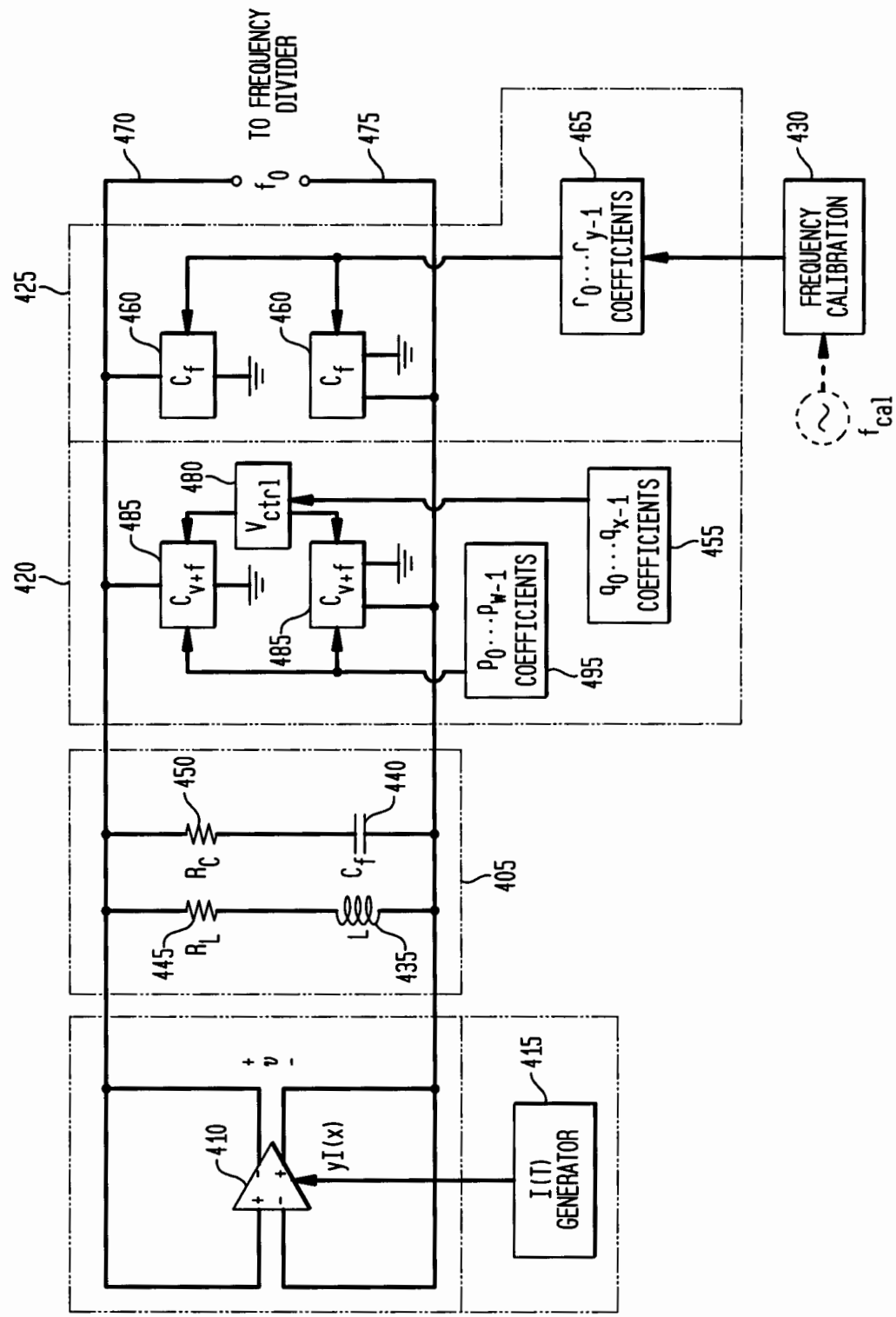
TO FREQUENCY DIVIDER
f_0
470
475
425
460
C_f
460
C_f
465
$r_0 \ldots r_{y-1}$ COEFFICIENTS
430
FREQUENCY CALIBRATION
f_{cal}
420
480
V_{ctrl}
485
C_{v+f}
485
C_{v+f}
$p_0 \ldots p_{w-1}$ COEFFICIENTS
495
$q_0 \ldots q_{x-1}$ COEFFICIENTS
455
405
450
R_C
440
C_f
445
R_L
L
435
410
yI(x)
+
v
-
415
I(T) GENERATOR

FIG. 5A

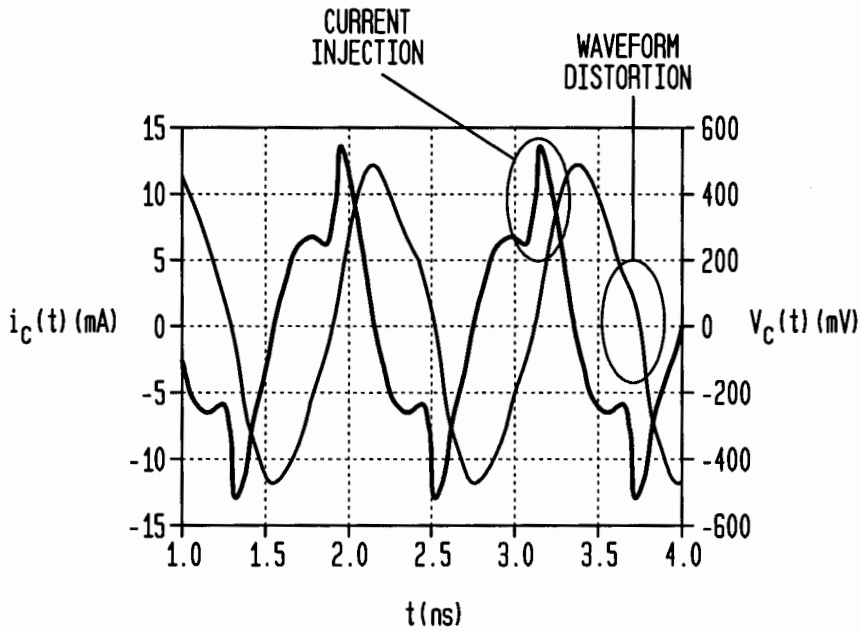

FIG. 5B

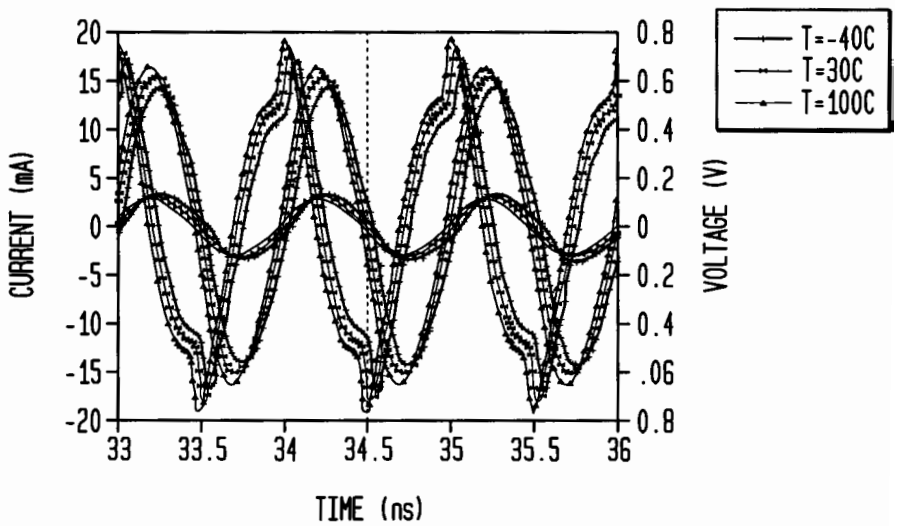

TEMPERATURE/BIAS DEPENDENCE

FIG. 5C

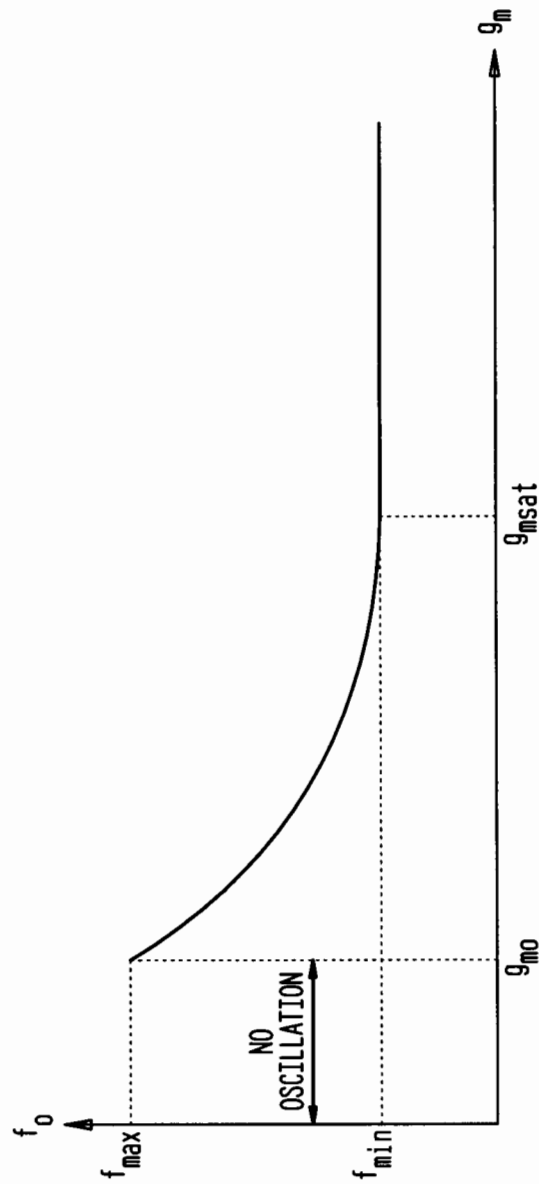

FIG. 6

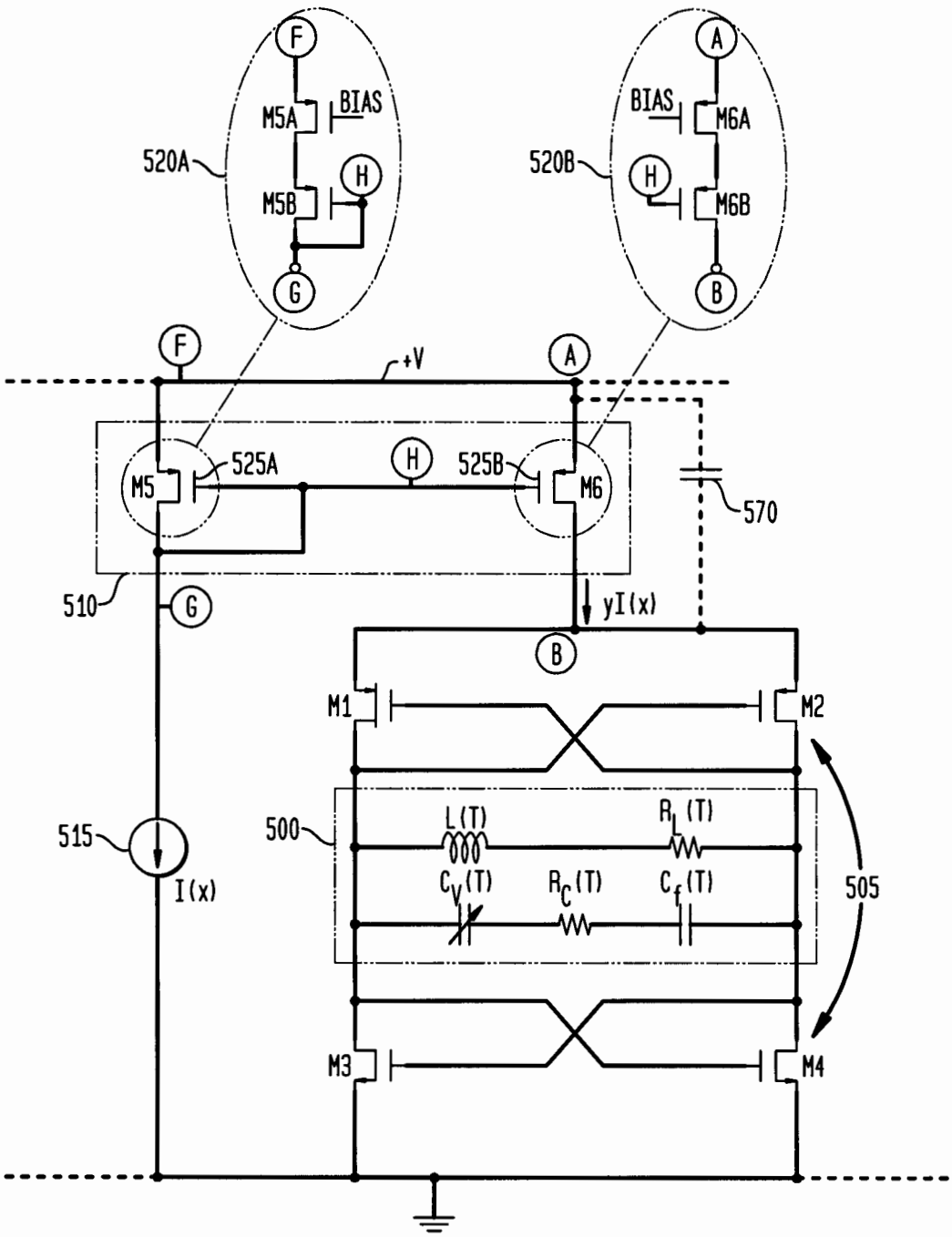
F
A
BIAS
M5A
M6A
520A
520B
H
M5B
M6B
G
B
+V
M5
525A
525B
M6
570
510
yI(x)
M1
M2
515
500
L(T)
R_L(T)
C_V(T)
R_C(T)
C_f(T)
I(x)
505
M3
M4

FIG. 7A

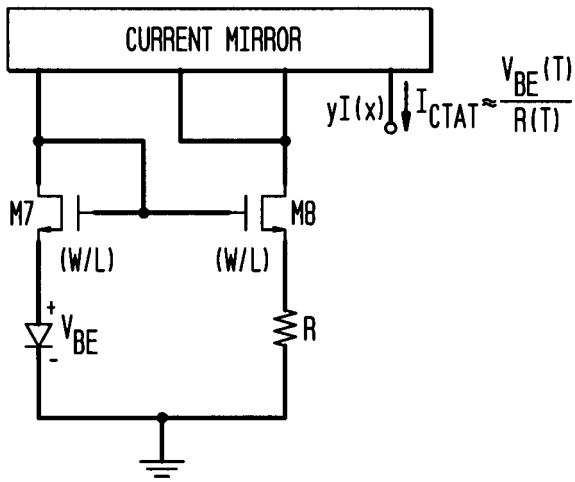
CURRENT MIRROR
yI(x)
$I_{CTAT} \approx \frac{V_{BE}(T)}{R(T)}$
M7
M8
(W/L)
(W/L)
+
V_{BE}
-
R

FIG. 7B

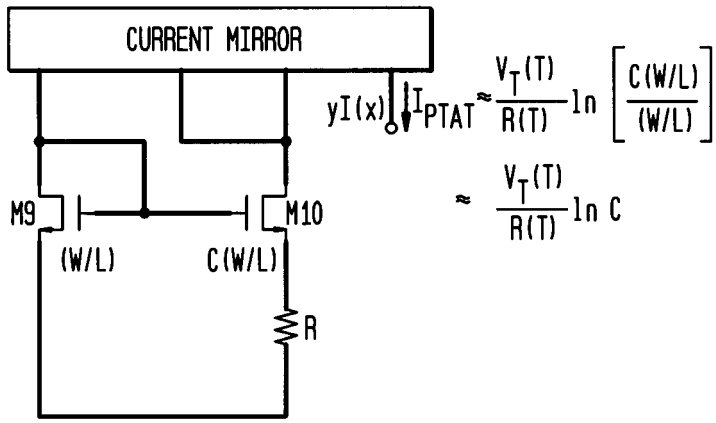
CURRENT MIRROR
yI(x)
$I_{PTAT} \approx \frac{V_T(T)}{R(T)} \ln \left[\frac{C(W/L)}{(W/L)}\right]$
$\approx \frac{V_T(T)}{R(T)} \ln C$
M9
M10
(W/L)
C(W/L)
R

FIG. 7C

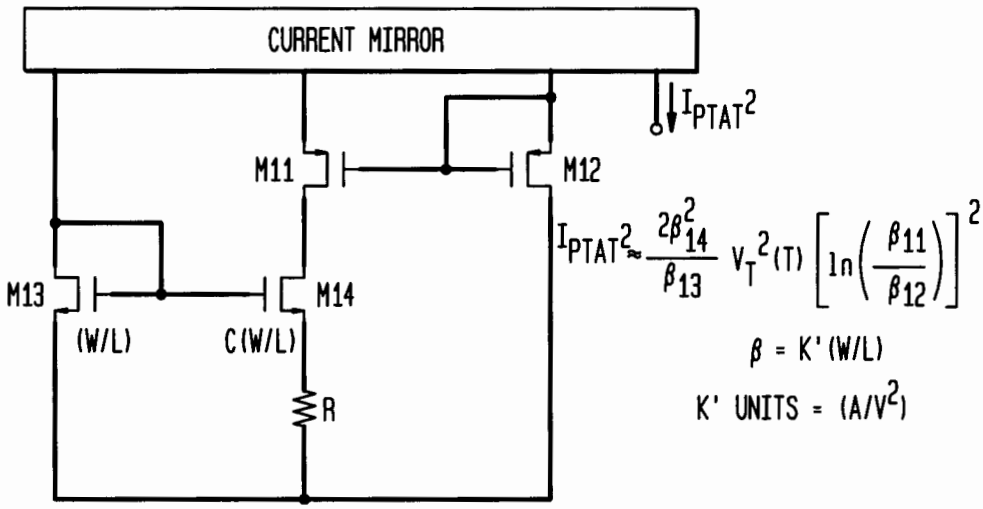
CURRENT MIRROR
I_{PTAT}^2
M11
M12
M13
M14
(W/L)
C(W/L)
R
$I_{PTAT}^2 \approx \frac{2\beta_{14}^2}{\beta_{13}} V_T^2(T) \left[\ln\left(\frac{\beta_{11}}{\beta_{12}}\right)\right]^2$
$\beta = K'(W/L)$
K' UNITS = (A/V^2)

FIG. 7D

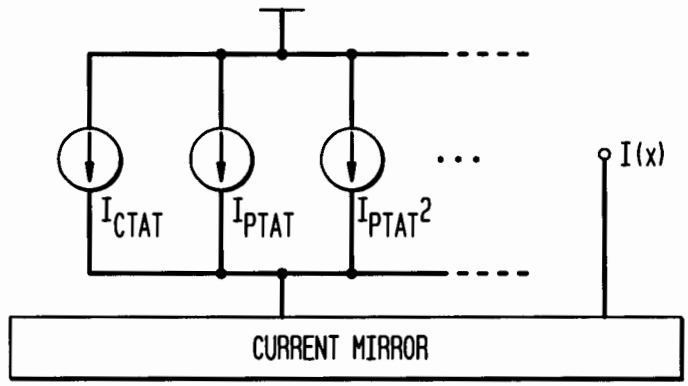
I_{CTAT}
I_{PTAT}
I_{PTAT}^2
I(x)
CURRENT MIRROR

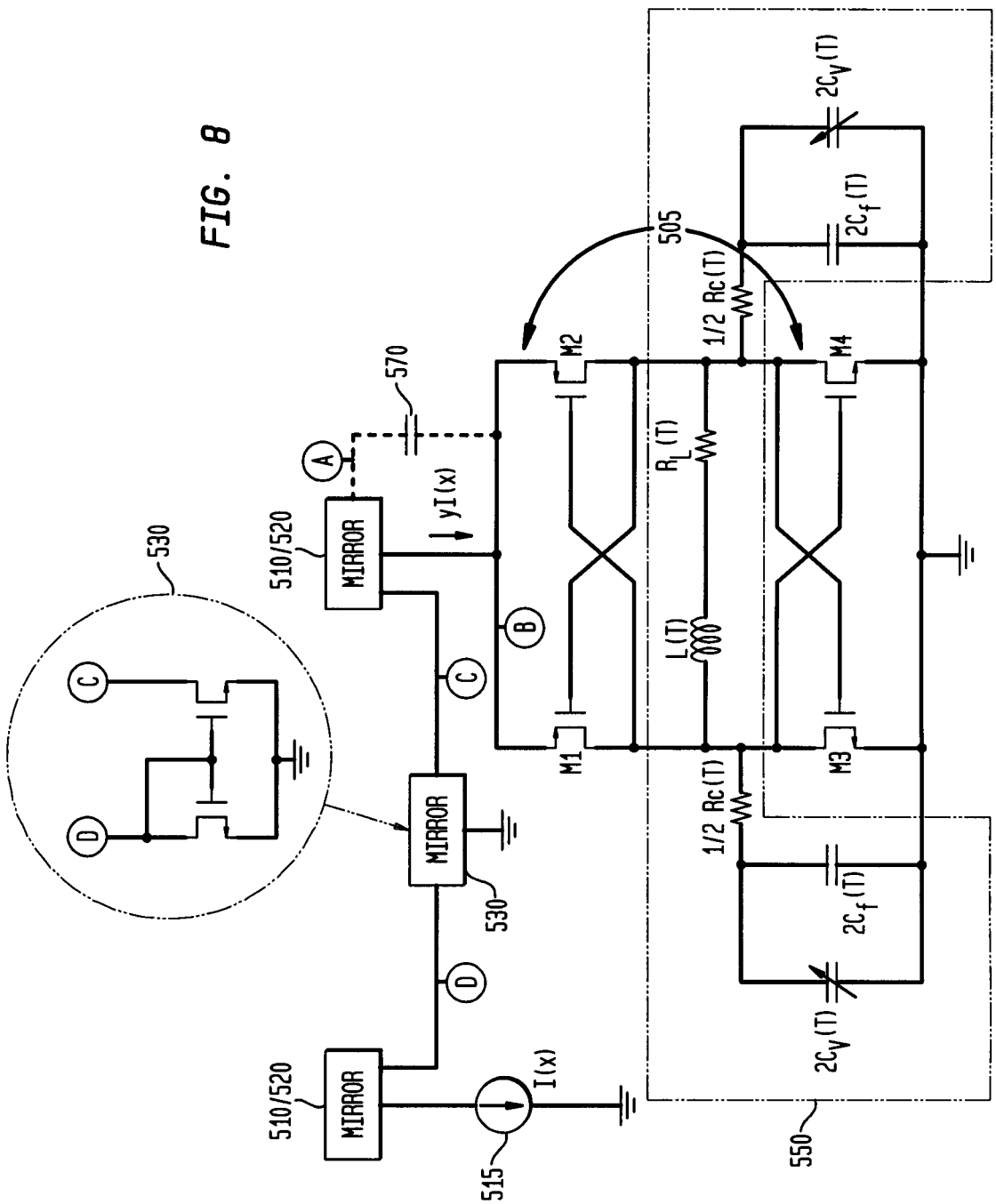
530
C
D
510/520
MIRROR
A
570
yI(x)
B
C
MIRROR
530
D
510/520
MIRROR
I(x)
515
M1
M2
M3
M4
505
$R_L(T)$
L(T)
1/2 Rc(T)
1/2 Rc(T)
$2C_f(T)$
$2C_f(T)$
$2C_V(T)$
$2C_V(T)$
550

FIG. 8

FIG. 9

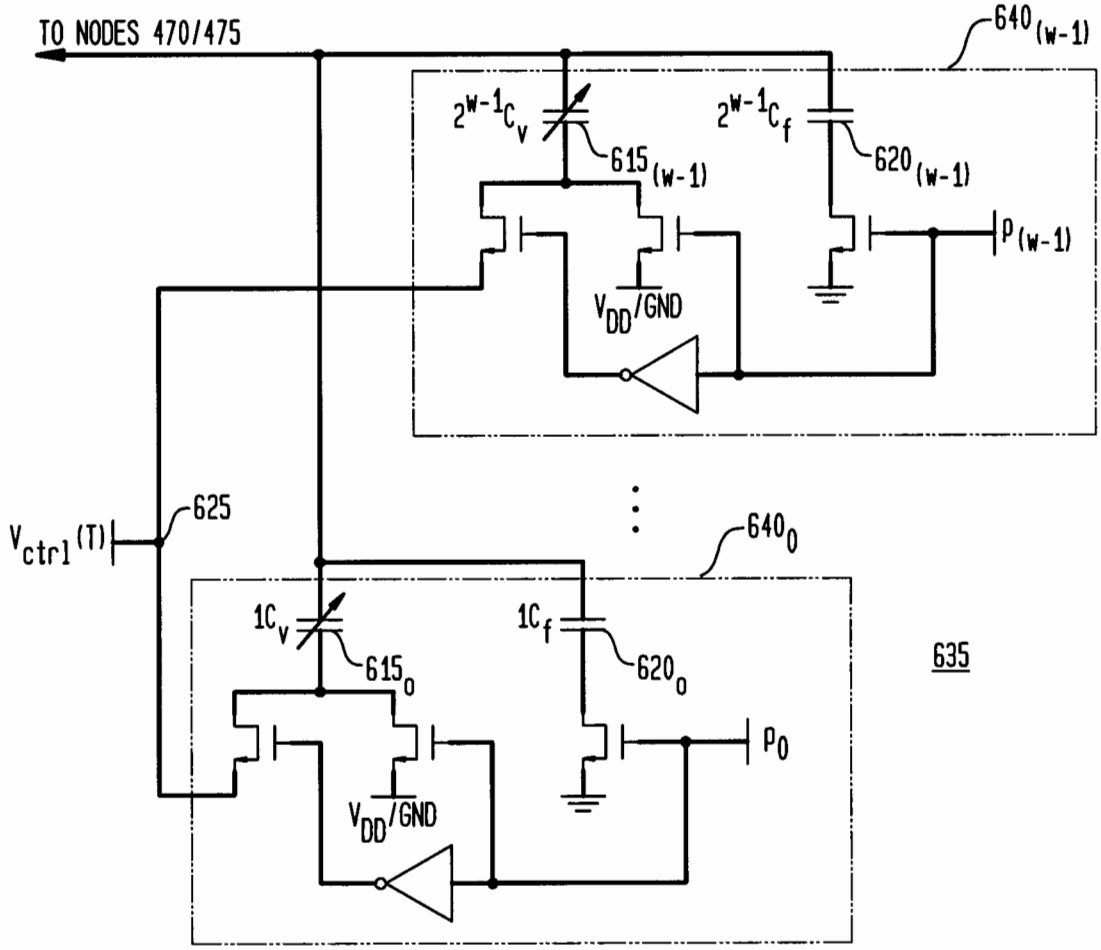
TO NODES 470/475
640(w-1)
2w-1Cv
2w-1Cf
615(w-1)
620(w-1)
P(w-1)
VDD/GND
Vctrl(T)
625
640o
1Cv
1Cf
615o
620o
635
Po
VDD/GND

FIG. 10

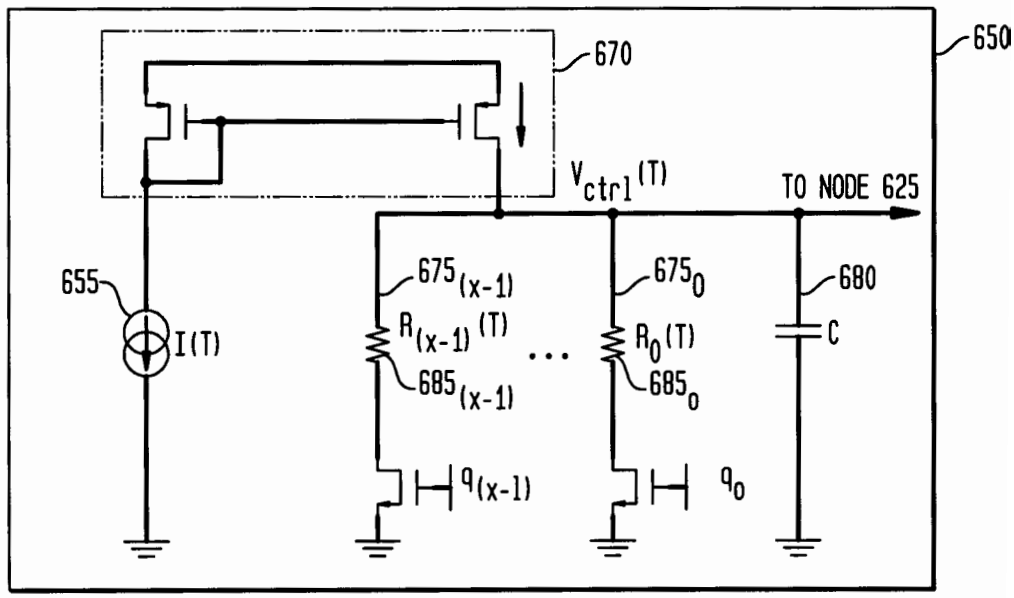
650
670
$V_{ctrl}(T)$
TO NODE 625
655
I(T)
$675_{(x-1)}$
$R_{(x-1)}(T)$
$685_{(x-1)}$
675_0
$R_0(T)$
685_0
680
C
$q_{(x-1)}$
q_0

FIG. 11

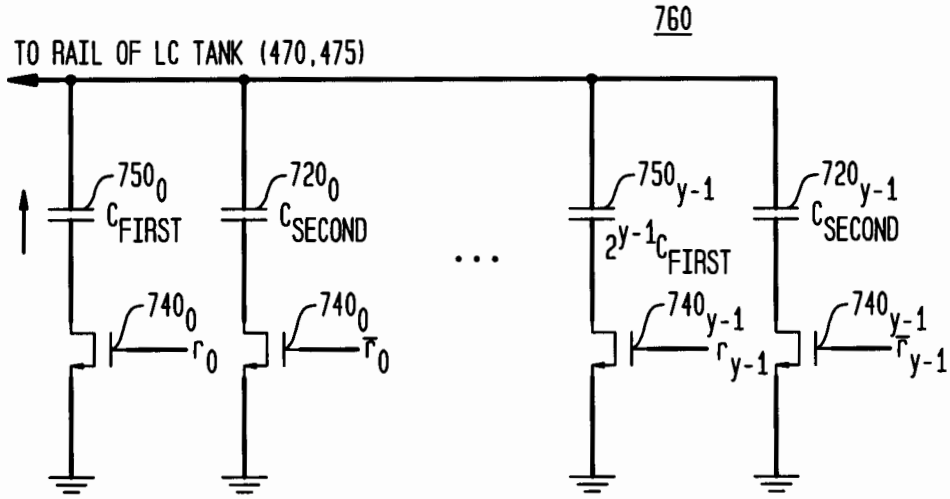
760
TO RAIL OF LC TANK (470,475)
750_0
C_{FIRST}
720_0
C_{SECOND}
750_{y-1}
$2^{y-1}C_{FIRST}$
720_{y-1}
C_{SECOND}
740_0
r_0
740_0
r_0
740_{y-1}
r_{y-1}
740_{y-1}
r_{y-1}

FIG. 12

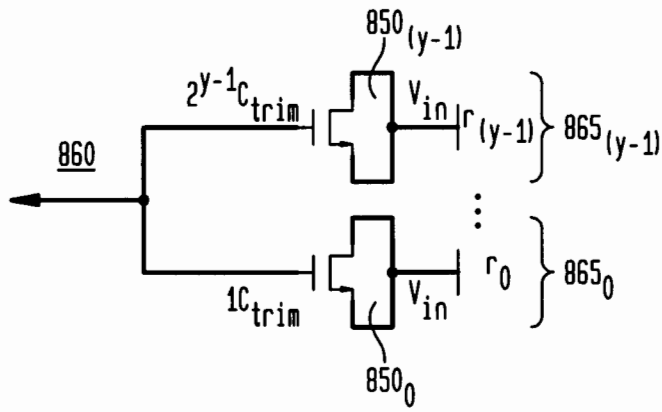
850(y-1)
2y-1Ctrim
Vin
r(y-1)
865(y-1)
860
r0
865₀
1Ctrim
Vin
850₀

FIG. 13

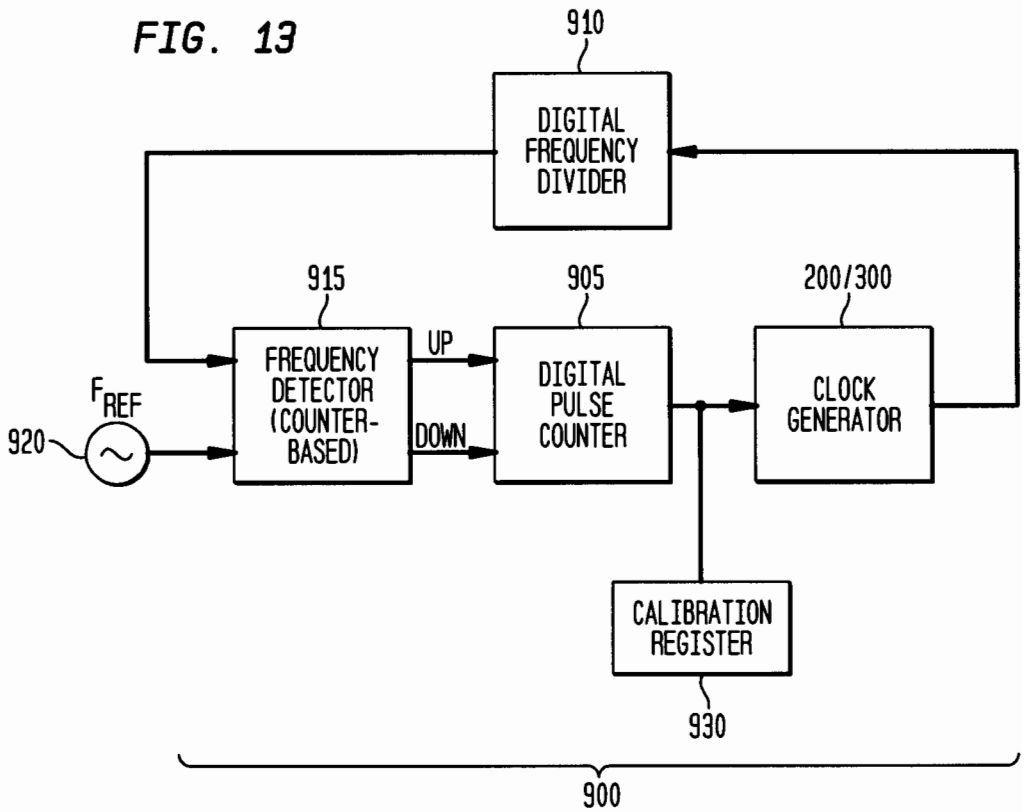
910
DIGITAL FREQUENCY DIVIDER
915
905
200/300
FREQUENCY DETECTOR (COUNTER-BASED)
UP
DOWN
DIGITAL PULSE COUNTER
CLOCK GENERATOR
FREF
920
CALIBRATION REGISTER
930
900

FIG. 14

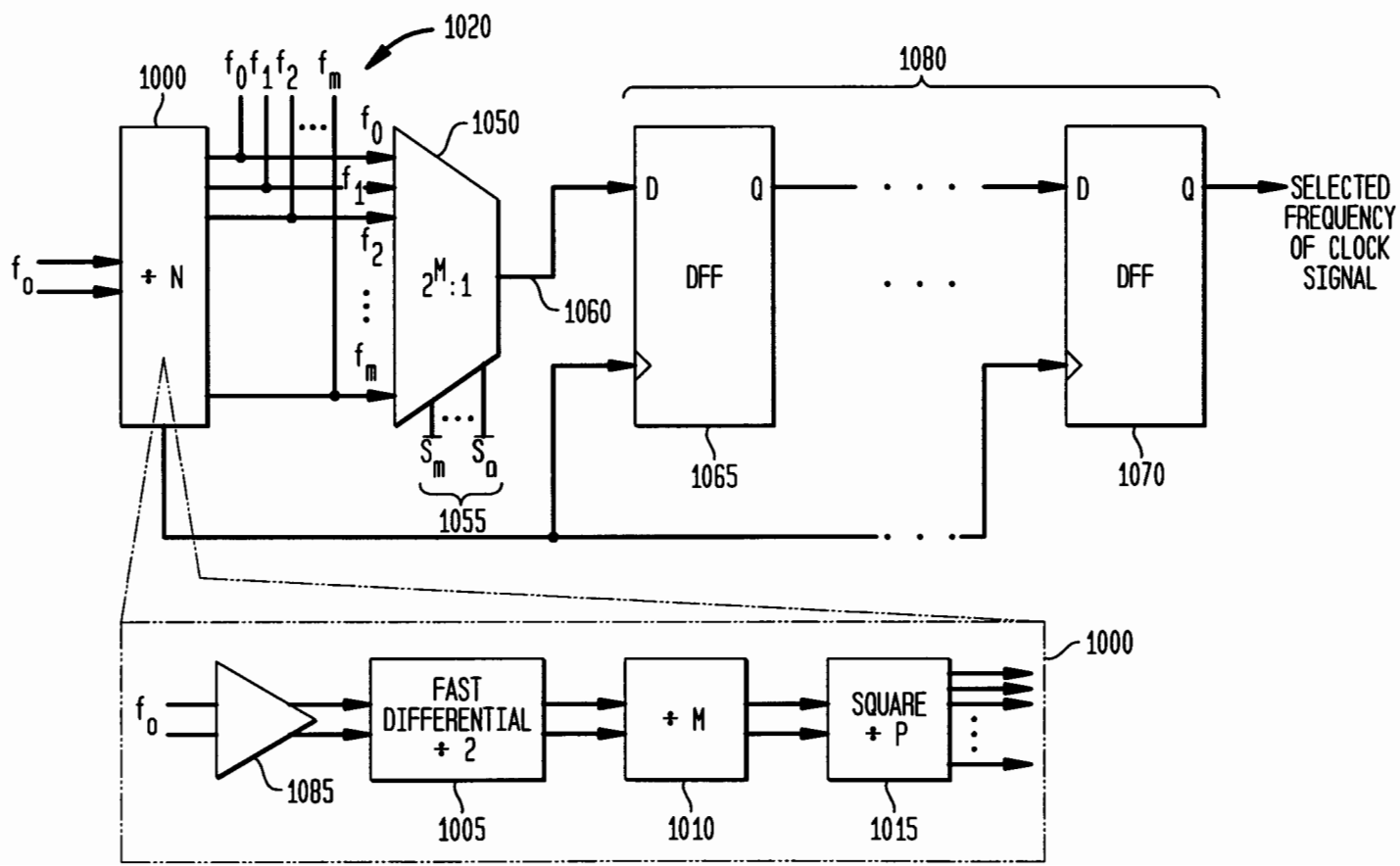
1020
1000
f_0 f_1 f_2 f_m
f_0
÷ N
1050
f_0
f_1
f_2
f_m
$2^M:1$
S_m S_0
1055
1060
1080
D
Q
DFF
1065
D
Q
DFF
1070
SELECTED FREQUENCY OF CLOCK SIGNAL
1000
f_0
1085
FAST DIFFERENTIAL ÷ 2
1005
÷ M
1010
SQUARE ÷ P
1015

FIG. 15B

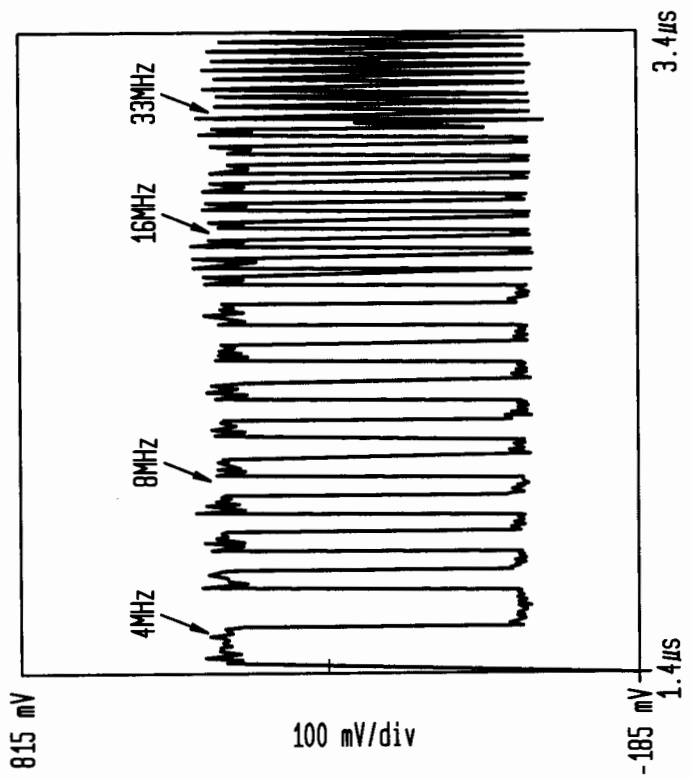

FIG. 15A

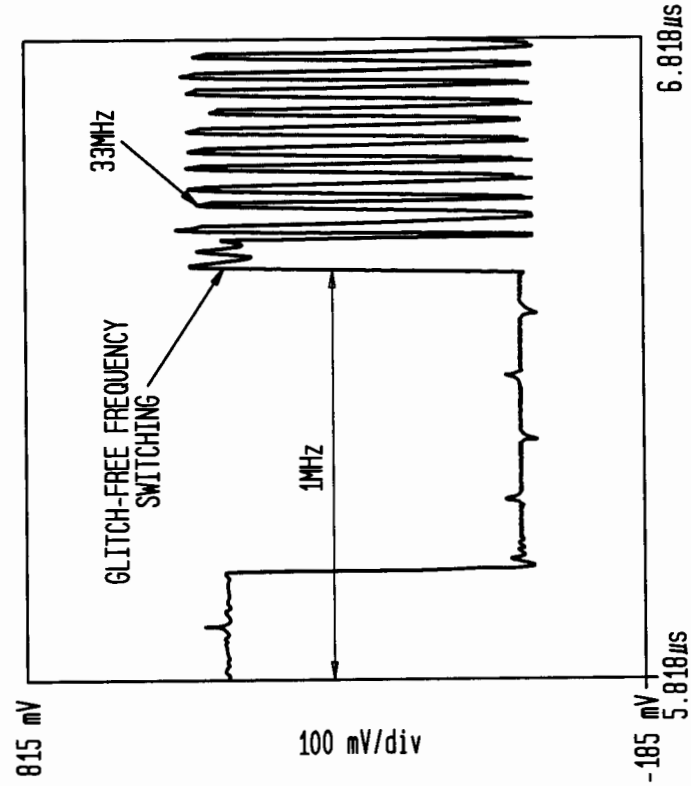

FIG. 16

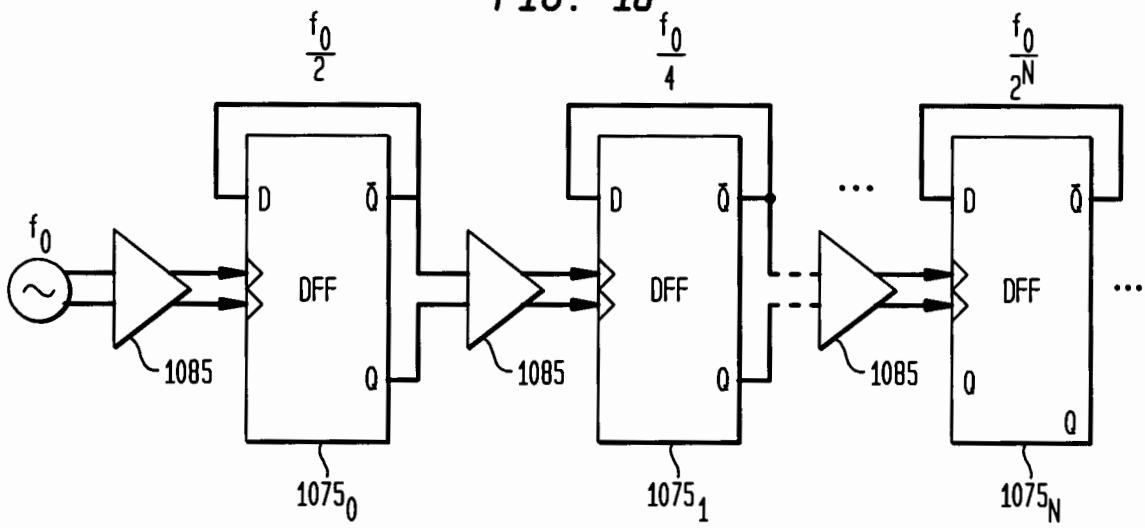

FIG. 17

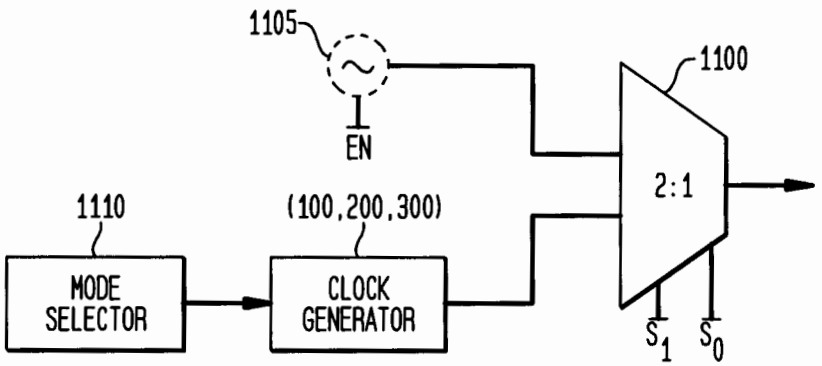

FIG. 18

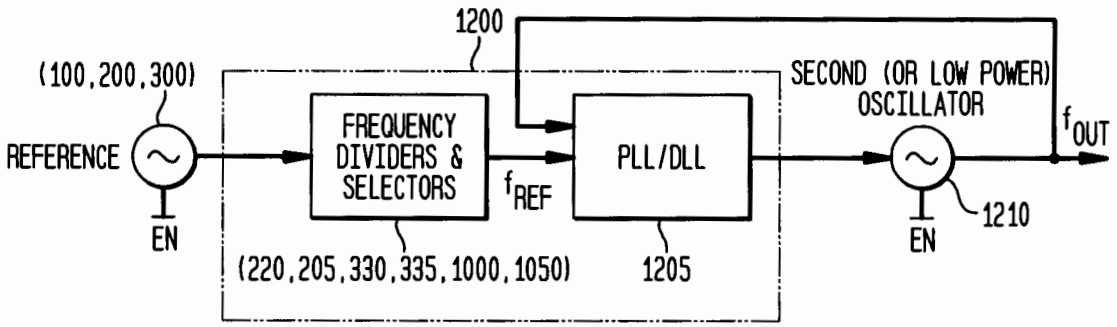

FIG. 19

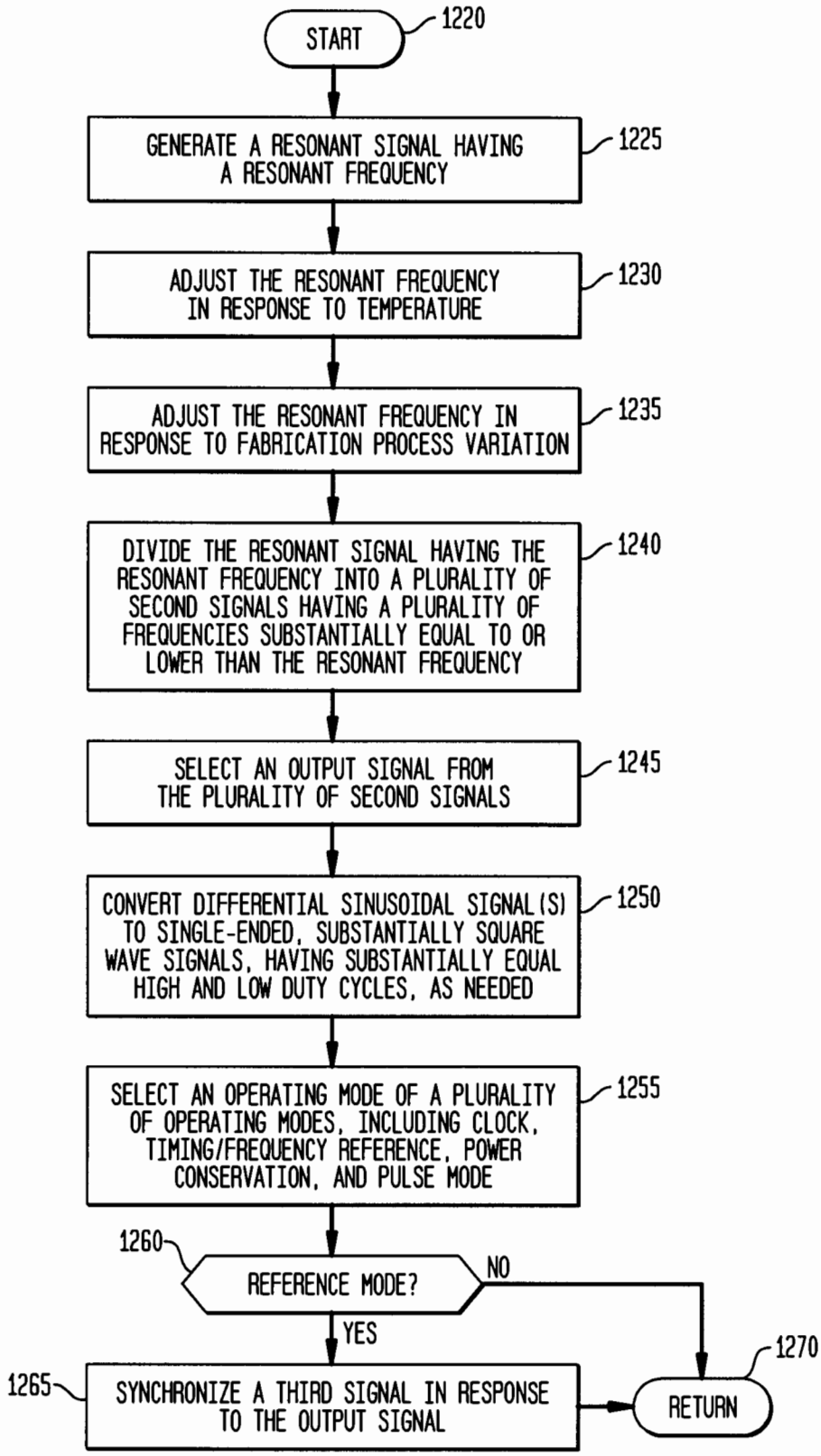
START
1220
GENERATE A RESONANT SIGNAL HAVING A RESONANT FREQUENCY
1225
ADJUST THE RESONANT FREQUENCY IN RESPONSE TO TEMPERATURE
1230
ADJUST THE RESONANT FREQUENCY IN RESPONSE TO FABRICATION PROCESS VARIATION
1235
DIVIDE THE RESONANT SIGNAL HAVING THE RESONANT FREQUENCY INTO A PLURALITY OF SECOND SIGNALS HAVING A PLURALITY OF FREQUENCIES SUBSTANTIALLY EQUAL TO OR LOWER THAN THE RESONANT FREQUENCY
1240
SELECT AN OUTPUT SIGNAL FROM THE PLURALITY OF SECOND SIGNALS
1245
CONVERT DIFFERENTIAL SINUSOIDAL SIGNAL(S) TO SINGLE-ENDED, SUBSTANTIALLY SQUARE WAVE SIGNALS, HAVING SUBSTANTIALLY EQUAL HIGH AND LOW DUTY CYCLES, AS NEEDED
1250
SELECT AN OPERATING MODE OF A PLURALITY OF OPERATING MODES, INCLUDING CLOCK, TIMING/FREQUENCY REFERENCE, POWER CONSERVATION, AND PULSE MODE
1255
1260
REFERENCE MODE?
NO
YES
1265
SYNCHRONIZE A THIRD SIGNAL IN RESPONSE TO THE OUTPUT SIGNAL
RETURN
1270