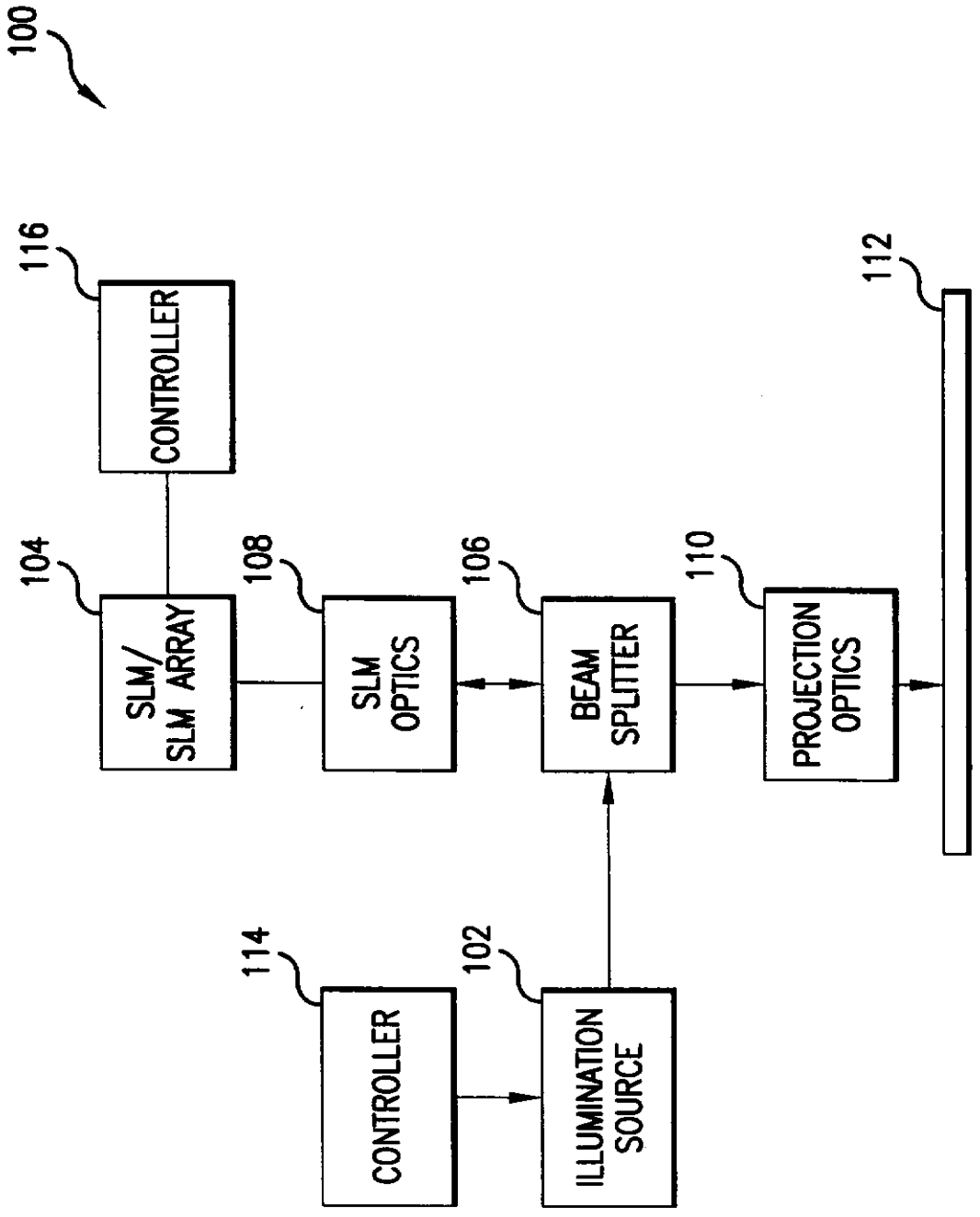
100
116
CONTROLLER
112
104
SLM/
SLM ARRAY
108
SLM
OPTICS
106
BEAM
SPLITTER
110
PROJECTION
OPTICS
114
CONTROLLER
102
ILLUMINATION
SOURCE

FIG. 1

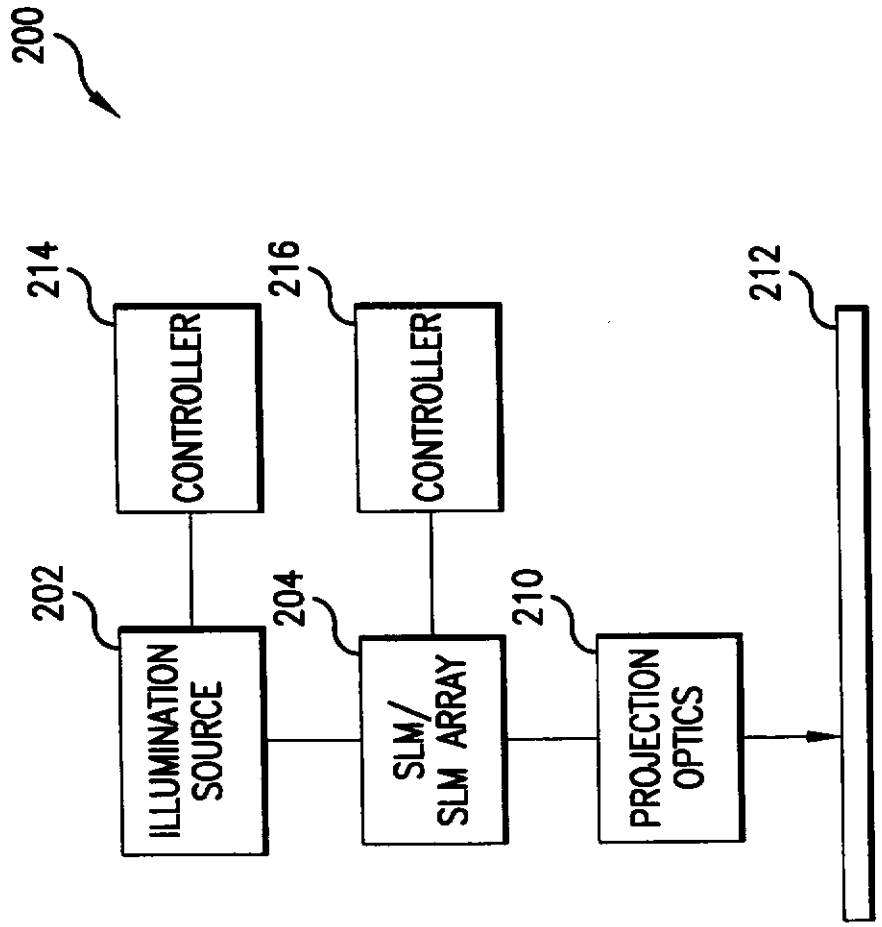
200
214
CONTROLLER
216
CONTROLLER
212
202
ILLUMINATION SOURCE
204
SLM/ SLM ARRAY
210
PROJECTION OPTICS

FIG.2

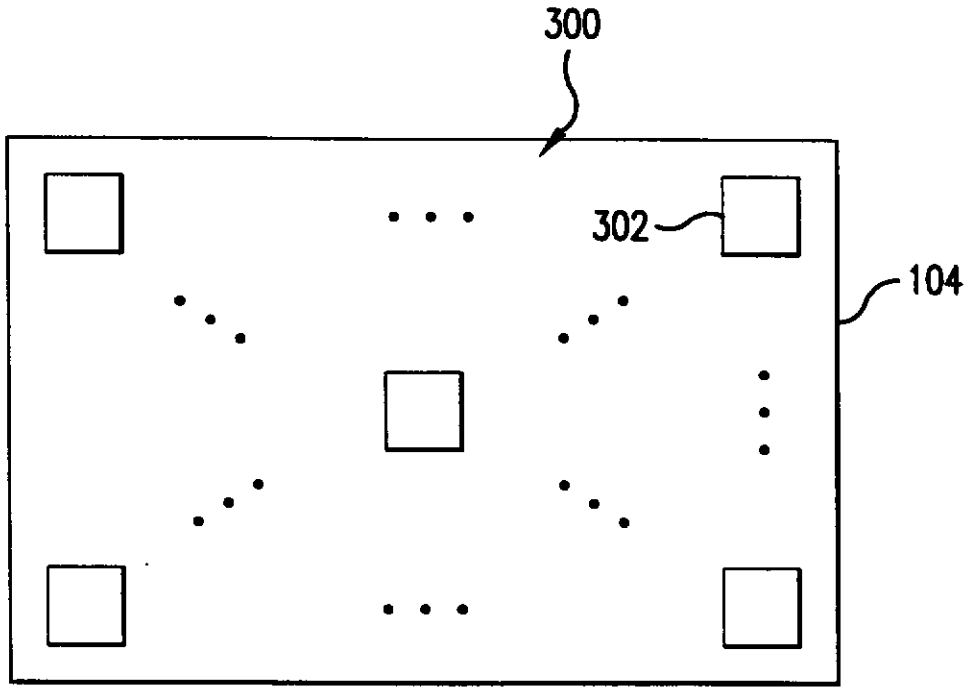


FIG.3

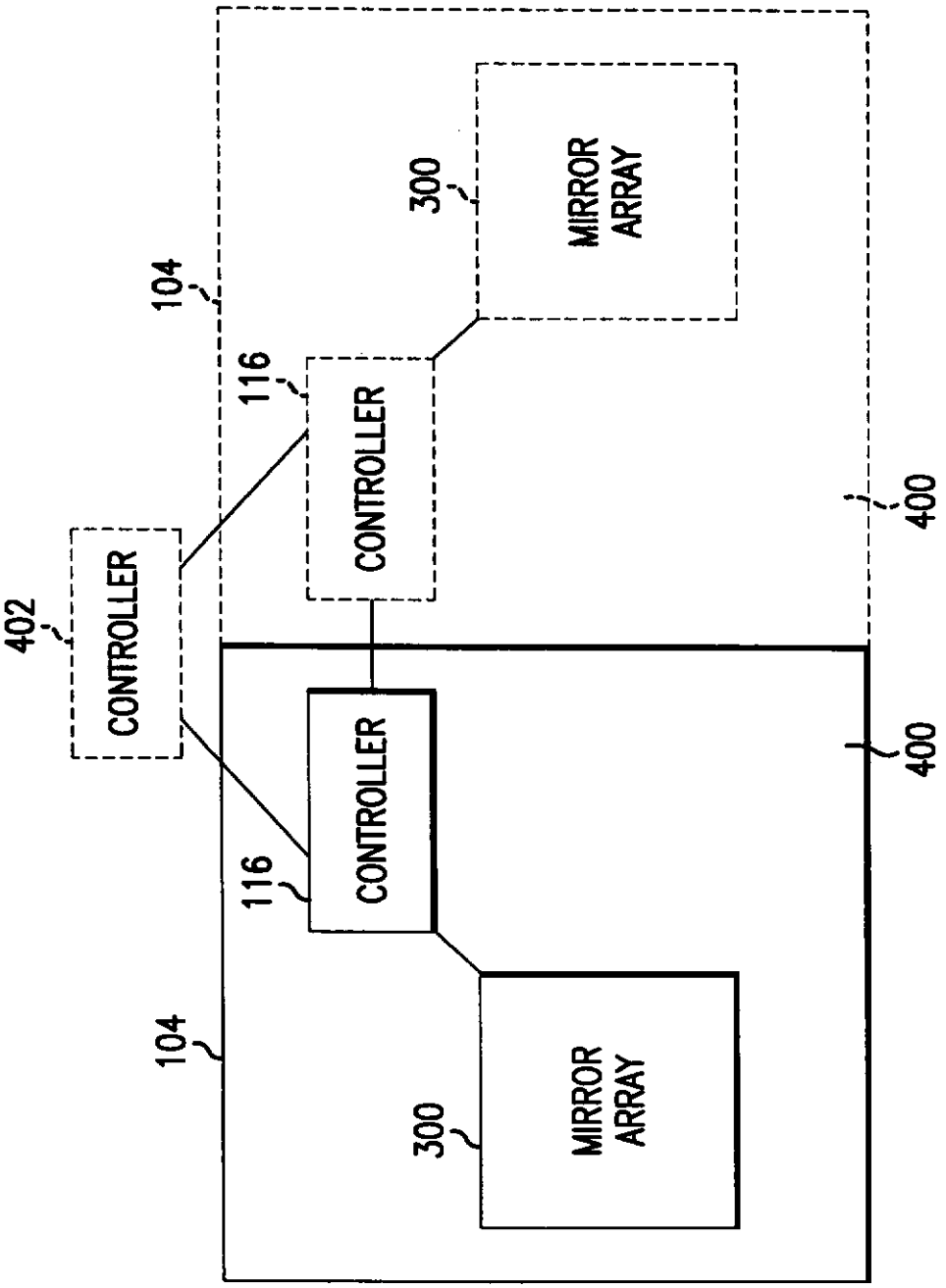
MIRROR ARRAY
300
104
116
CONTROLLER
400
402
CONTROLLER
CONTROLLER
116
400
104
300
MIRROR ARRAY

FIG.4

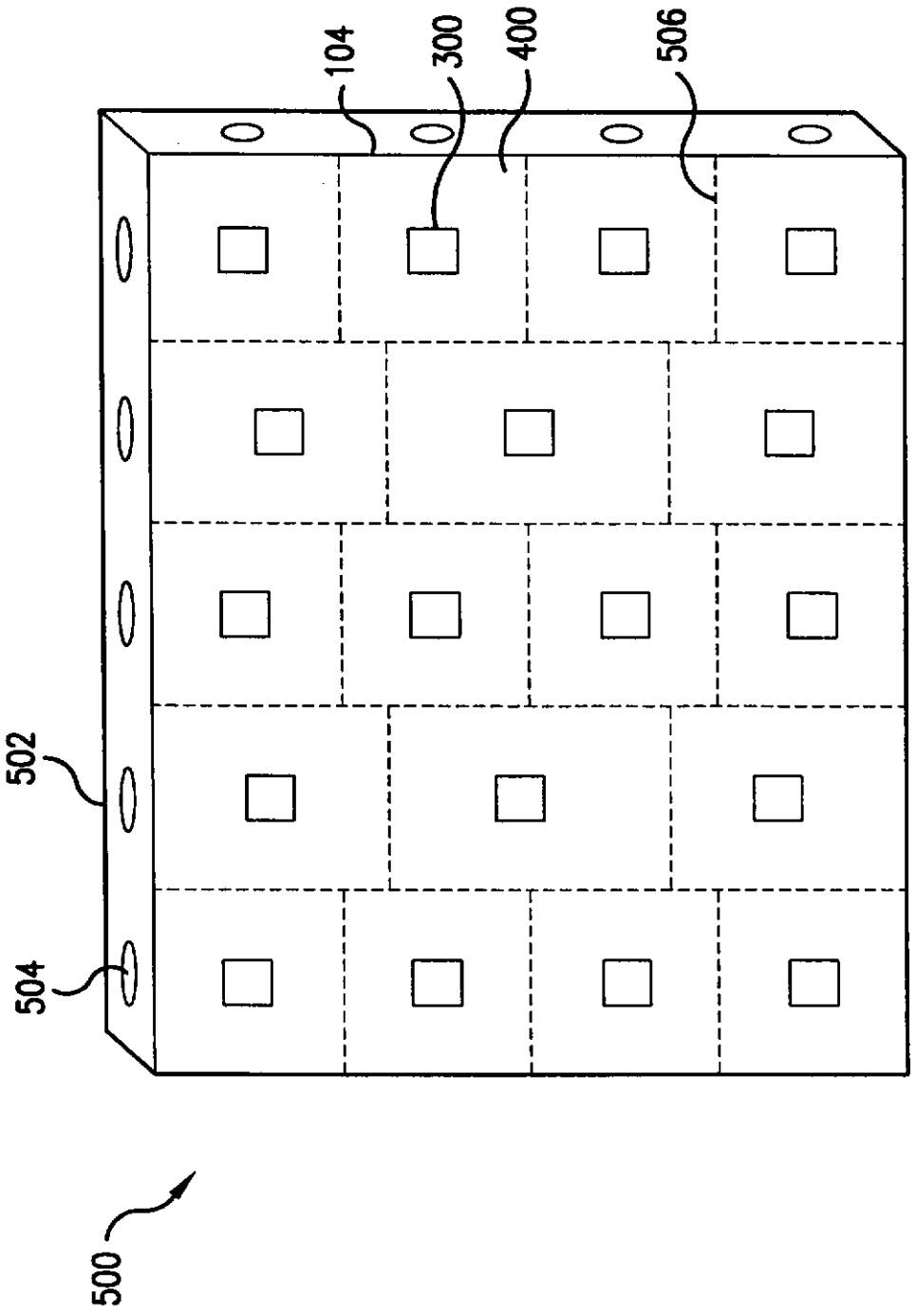


FIG.5

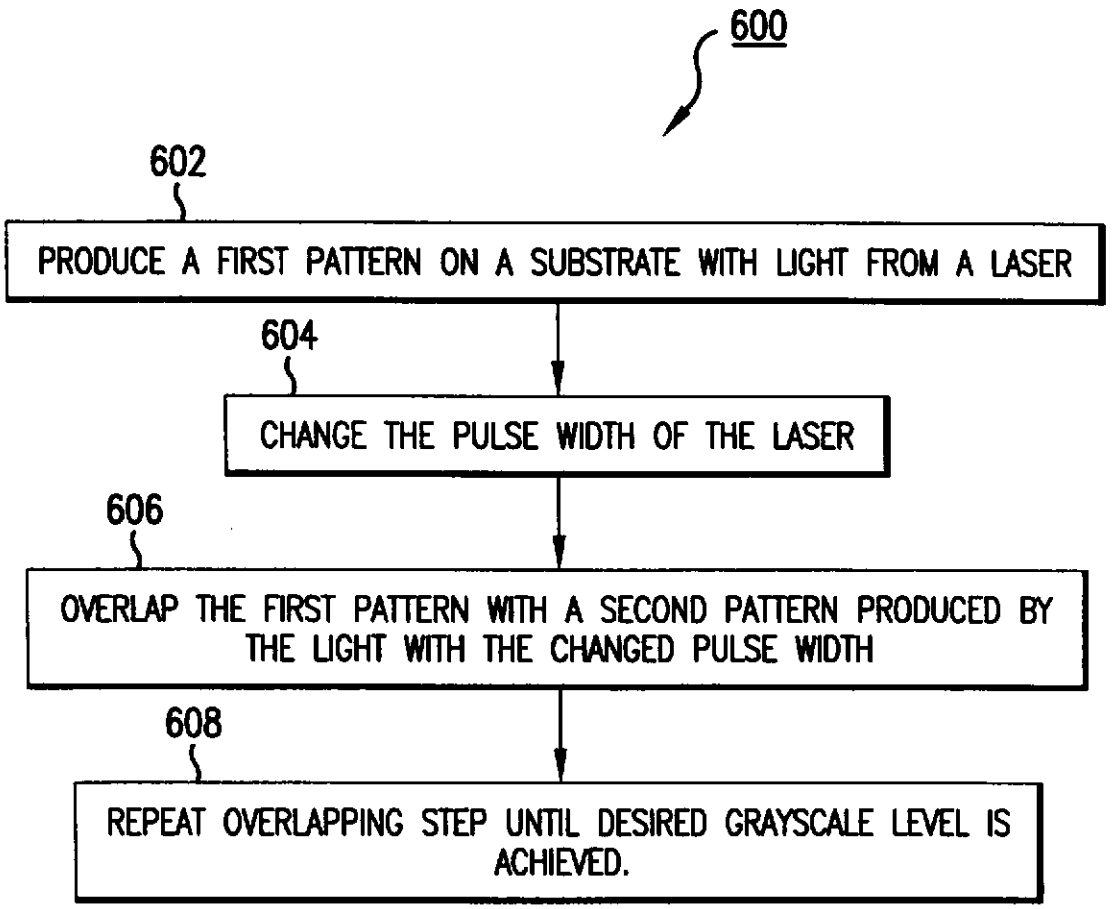
600
602
PRODUCE A FIRST PATTERN ON A SUBSTRATE WITH LIGHT FROM A LASER
604
CHANGE THE PULSE WIDTH OF THE LASER
606
OVERLAP THE FIRST PATTERN WITH A SECOND PATTERN PRODUCED BY THE LIGHT WITH THE CHANGED PULSE WIDTH
608
REPEAT OVERLAPPING STEP UNTIL DESIRED GRAYSCALE LEVEL IS ACHIEVED.

FIG.6

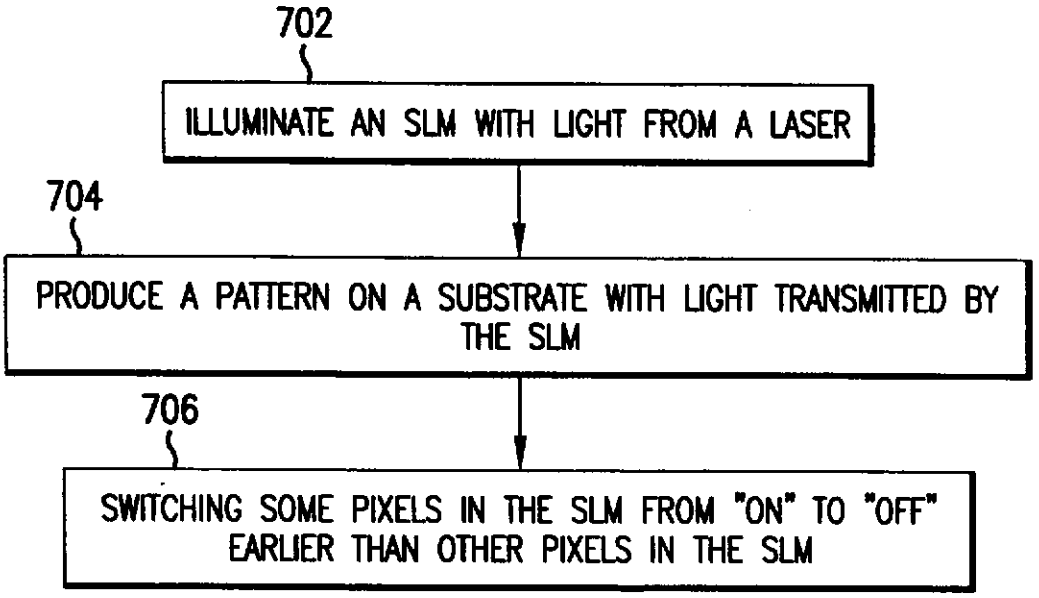
702
ILLUMINATE AN SLM WITH LIGHT FROM A LASER
704
PRODUCE A PATTERN ON A SUBSTRATE WITH LIGHT TRANSMITTED BY THE SLM
706
SWITCHING SOME PIXELS IN THE SLM FROM "ON" TO "OFF" EARLIER THAN OTHER PIXELS IN THE SLM

FIG.7

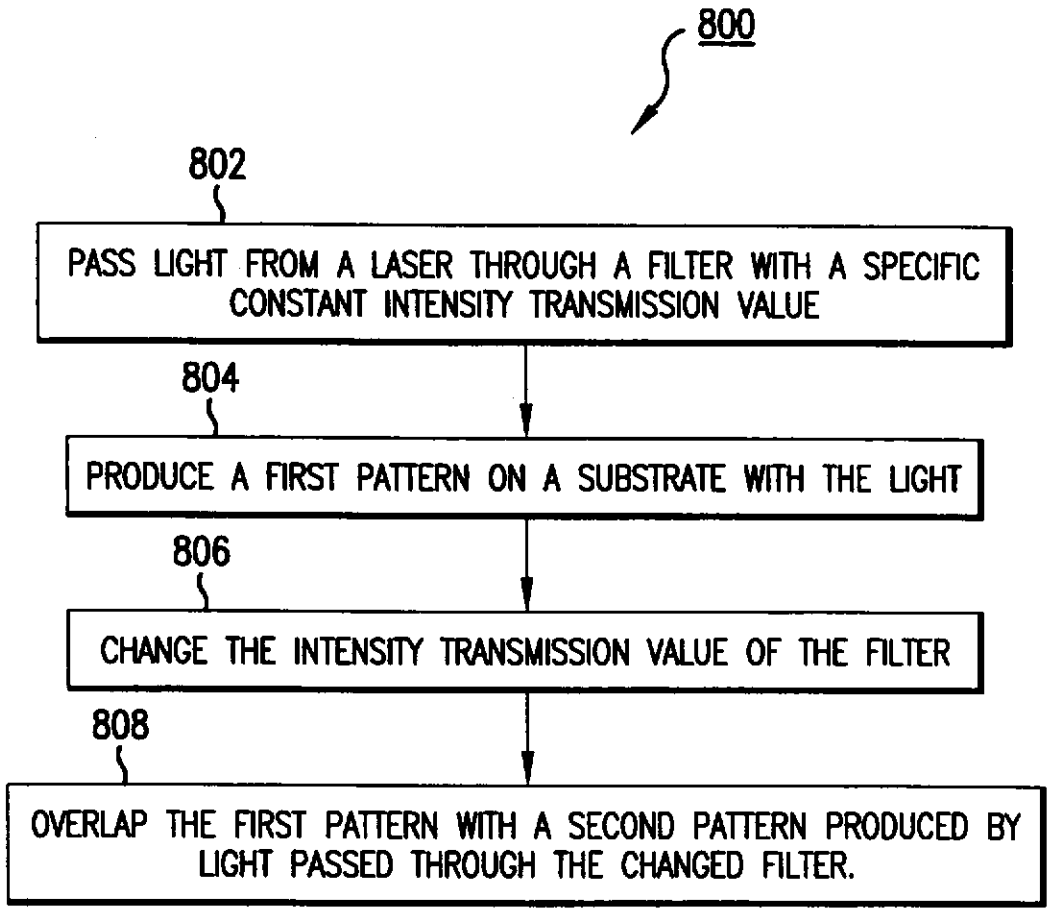
800
802
PASS LIGHT FROM A LASER THROUGH A FILTER WITH A SPECIFIC CONSTANT INTENSITY TRANSMISSION VALUE
804
PRODUCE A FIRST PATTERN ON A SUBSTRATE WITH THE LIGHT
806
CHANGE THE INTENSITY TRANSMISSION VALUE OF THE FILTER
808
OVERLAP THE FIRST PATTERN WITH A SECOND PATTERN PRODUCED BY LIGHT PASSED THROUGH THE CHANGED FILTER.

FIG.8

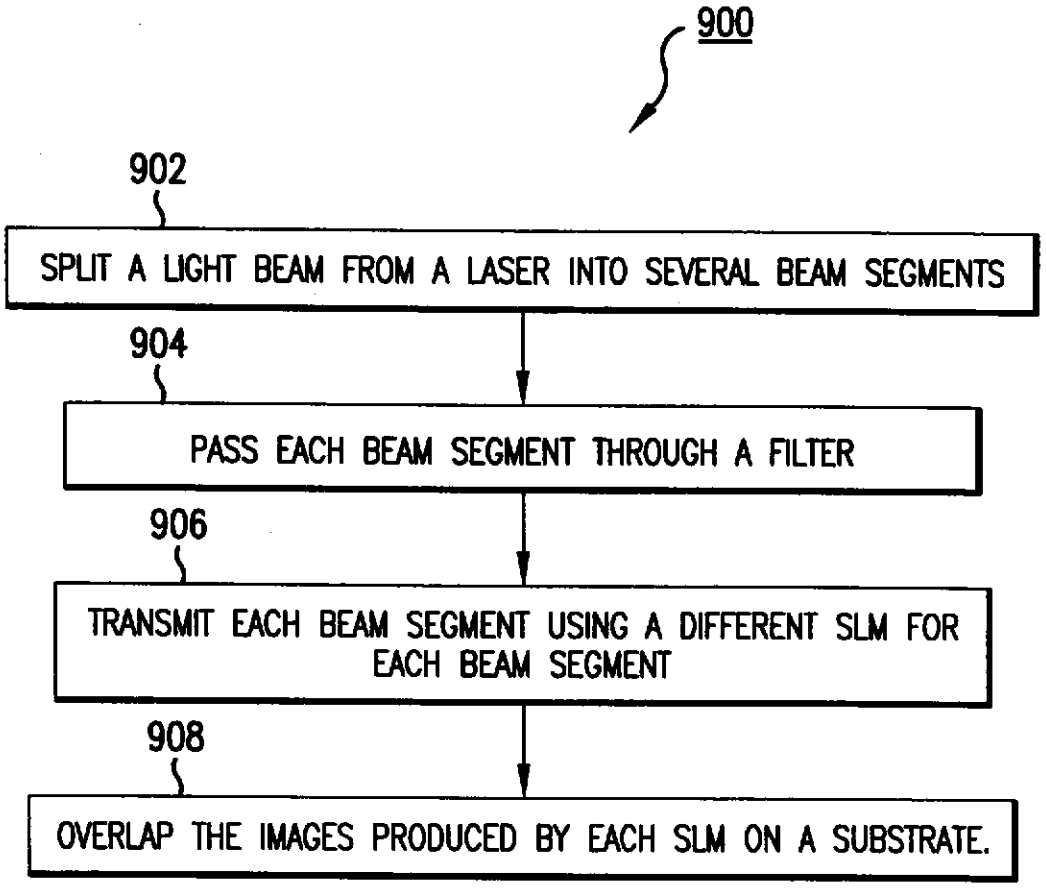
900
902
SPLIT A LIGHT BEAM FROM A LASER INTO SEVERAL BEAM SEGMENTS
904
PASS EACH BEAM SEGMENT THROUGH A FILTER
906
TRANSMIT EACH BEAM SEGMENT USING A DIFFERENT SLM FOR EACH BEAM SEGMENT
908
OVERLAP THE IMAGES PRODUCED BY EACH SLM ON A SUBSTRATE.

FIG.9

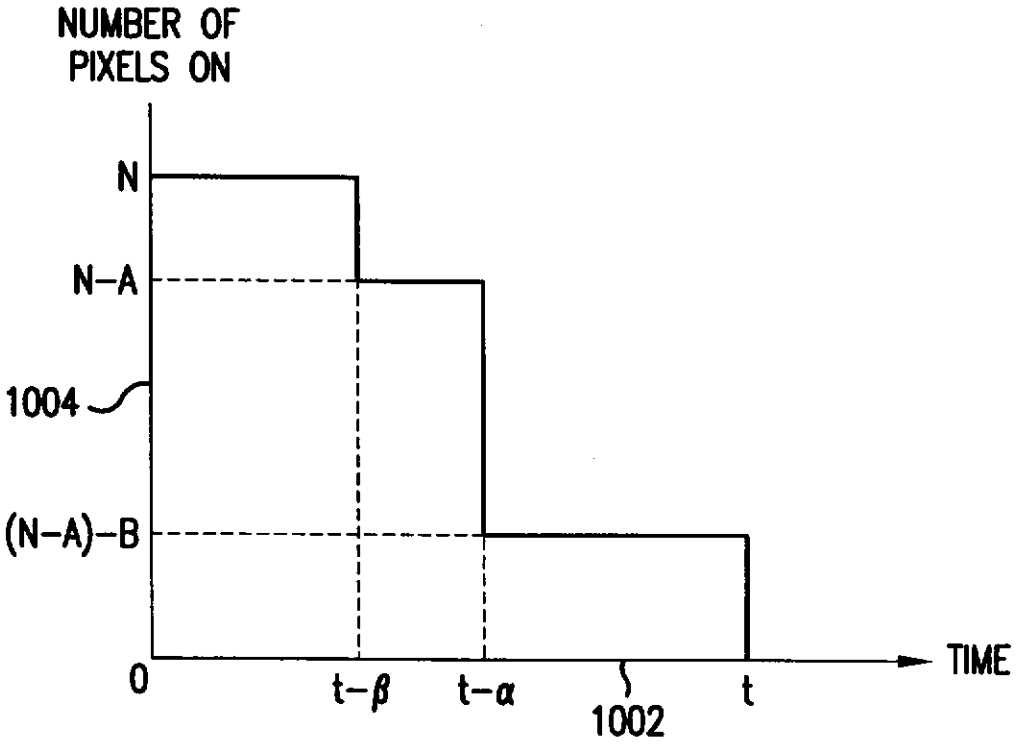


FIG.10

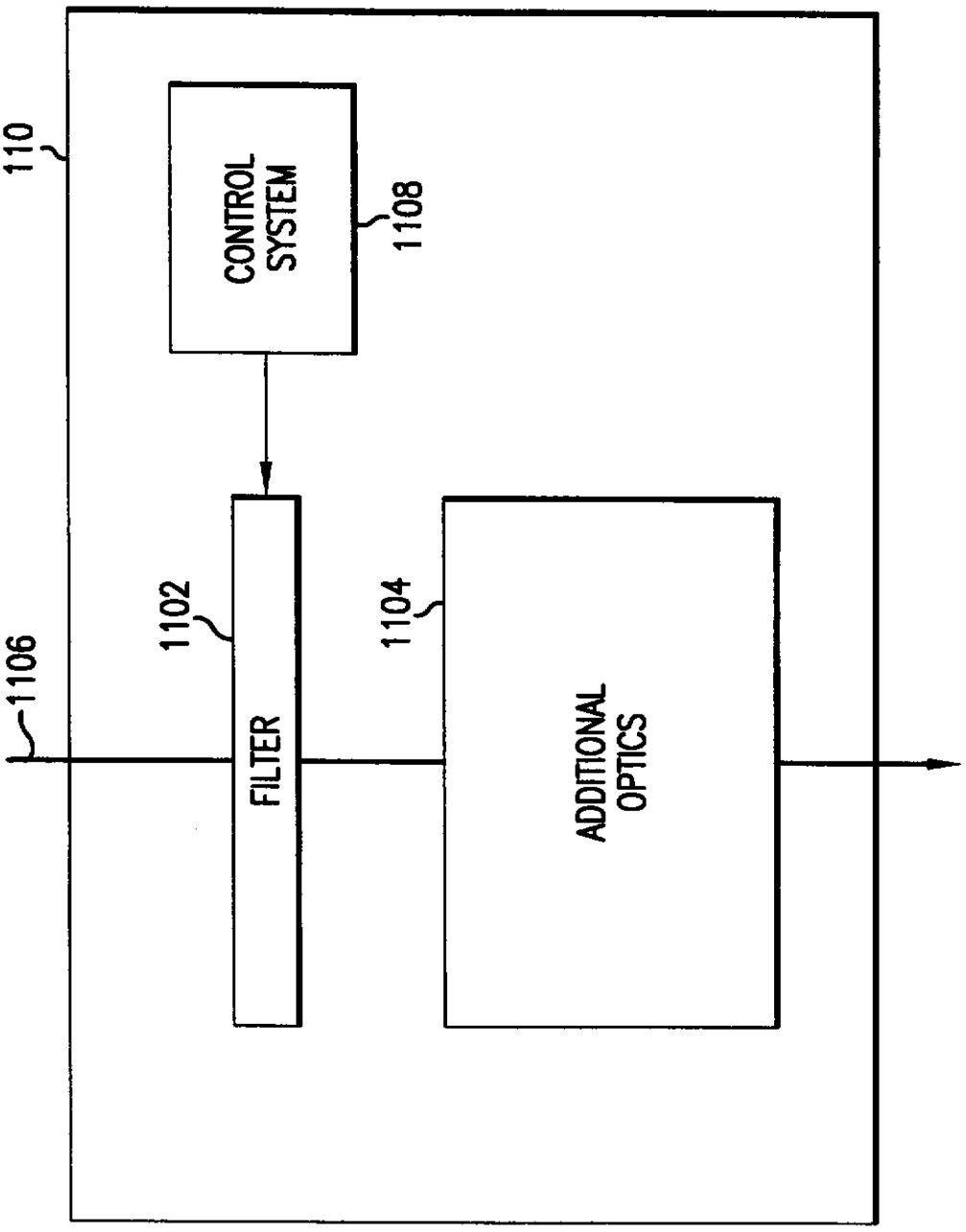
110
CONTROL SYSTEM
1108
1102
1104
1106
FILTER
ADDITIONAL OPTICS

FIG. 11

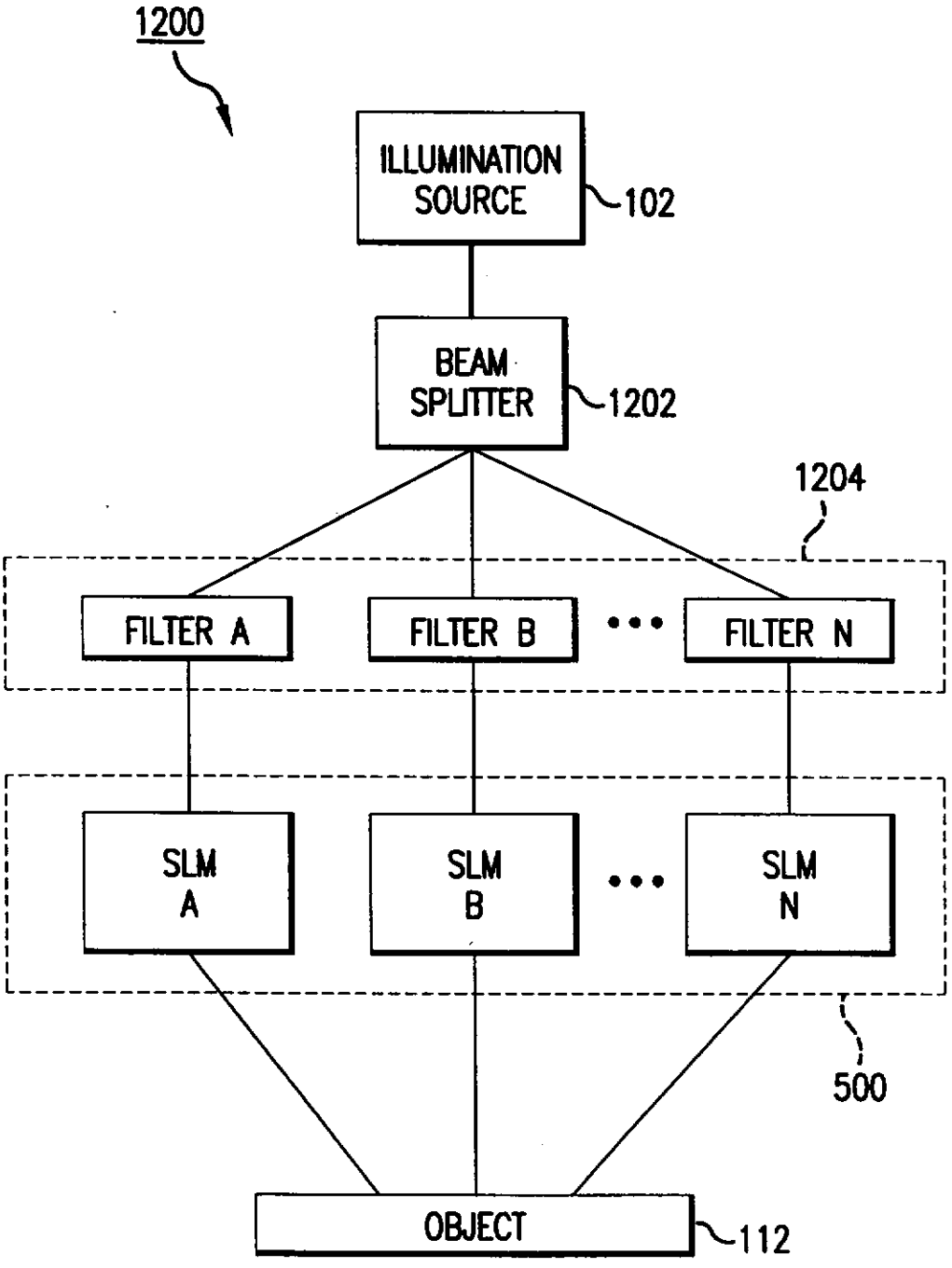
1200
ILLUMINATION SOURCE
102
BEAM SPLITTER
1202
1204
FILTER A
FILTER B
FILTER N
SLM A
SLM B
SLM N
500
OBJECT
112

FIG.12