(12) INTERNATIONAL APPLICATION PUBLISHED UNDER THE PATENT COOPERATION TREATY (PCT)

(19) World Intellectual Property Organization
International Bureau

(43) International Publication Date
25 November 2004 (25.11.2004)

PCT

(10) International Publication Number
WO 2004/100711 A1

(74) Agent: BRUESS, Steven, C.; Merchant & Gould P.C., P.O. Box 2903, Minneapolis, MN 55402-0903 (US).

(51) International Patent Classification[7]: A47B 3/14

(21) International Application Number: PCT/US2004/015112

(22) International Filing Date: 12 May 2004 (12.05.2004)

(25) Filing Language: English

(26) Publication Language: English

(30) Priority Data:
10/437,724 13 May 2003 (13.05.2003) US

(71) Applicant *(for all designated States except US)*: SICO INCORPORATED [US/US]; 7525 Cahill Road, Minneapolis, MN 55439-2745 (US).

(72) Inventor; and

(75) Inventor/Applicant *(for US only)*: ELLIOTT, John, M. [US/US]; 5904 Lee Valley Road, Edina, MN 55439 (US).

(81) Designated States *(unless otherwise indicated, for every kind of national protection available)*: AE, AG, AL, AM, AT, AU, AZ, BA, BB, BG, BR, BW, BY, BZ, CA, CH, CN, CO, CR, CU, CZ, DE, DK, DM, DZ, EC, EE, EG, ES, FI, GB, GD, GE, GH, GM, HR, HU, ID, IL, IN, IS, JP, KE, KG, KP, KR, KZ, LC, LK, LR, LS, LT, LU, LV, MA, MD, MG, MK, MN, MW, MX, MZ, NA, NI, NO, NZ, OM, PG, PH, PL, PT, RO, RU, SC, SD, SE, SG, SK, SL, SY, TJ, TM, TN, TR, TT, TZ, UA, UG, US, UZ, VC, VN, YU, ZA, ZM, ZW.

(84) Designated States *(unless otherwise indicated, for every kind of regional protection available)*: ARIPO (BW, GH, GM, KE, LS, MW, MZ, NA, SD, SL, SZ, TZ, UG, ZM, ZW), Eurasian (AM, AZ, BY, KG, KZ, MD, RU, TJ, TM), European (AT, BE, BG, CH, CY, CZ, DE, DK, EE, ES, FI, FR, GB, GR, HU, IE, IT, LU, MC, NL, PL, PT, RO, SE, SI,

[Continued on next page]

(54) Title: FOLDING PICNIC TABLE

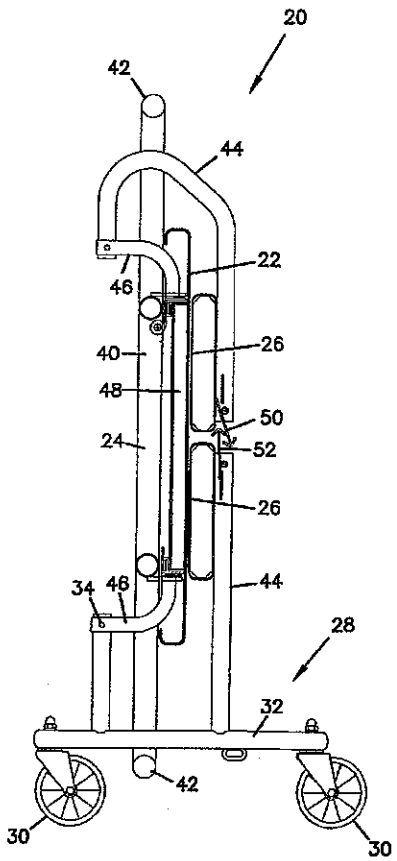

(57) Abstract: A folding picnic table (20) has a frame (24) including folding legs (40). The frame supports a tabletop (22) and a bench (26) extending along each side of the tabletop. The picnic table folds between a use position and a storage position with the benches folded onto the tabletop and tipped onto one side on a caster assembly (28). The table includes a locking device, automatically locking the seating structures to the tabletop at a partially tipped position; and automatically releasing the legs when the table is tipped to a storage position. The frame also includes a retainer plate (82) that keeps the frame from accidentally folding when the benches are folded onto the tabletop for cleaning under the table or during tipping of the table to a storage position.

WO 2004/100711 A1

SK, TR), OAPI (BF, BJ, CF, CG, CI, CM, GA, GN, GQ, GW, ML, MR, NE, SN, TD, TG).

Published:

— *with international search report*

— *before the expiration of the time limit for amending the claims and to be republished in the event of receipt of amendments*

For two-letter codes and other abbreviations, refer to the "Guidance Notes on Codes and Abbreviations" appearing at the beginning of each regular issue of the PCT Gazette.