FIG.1

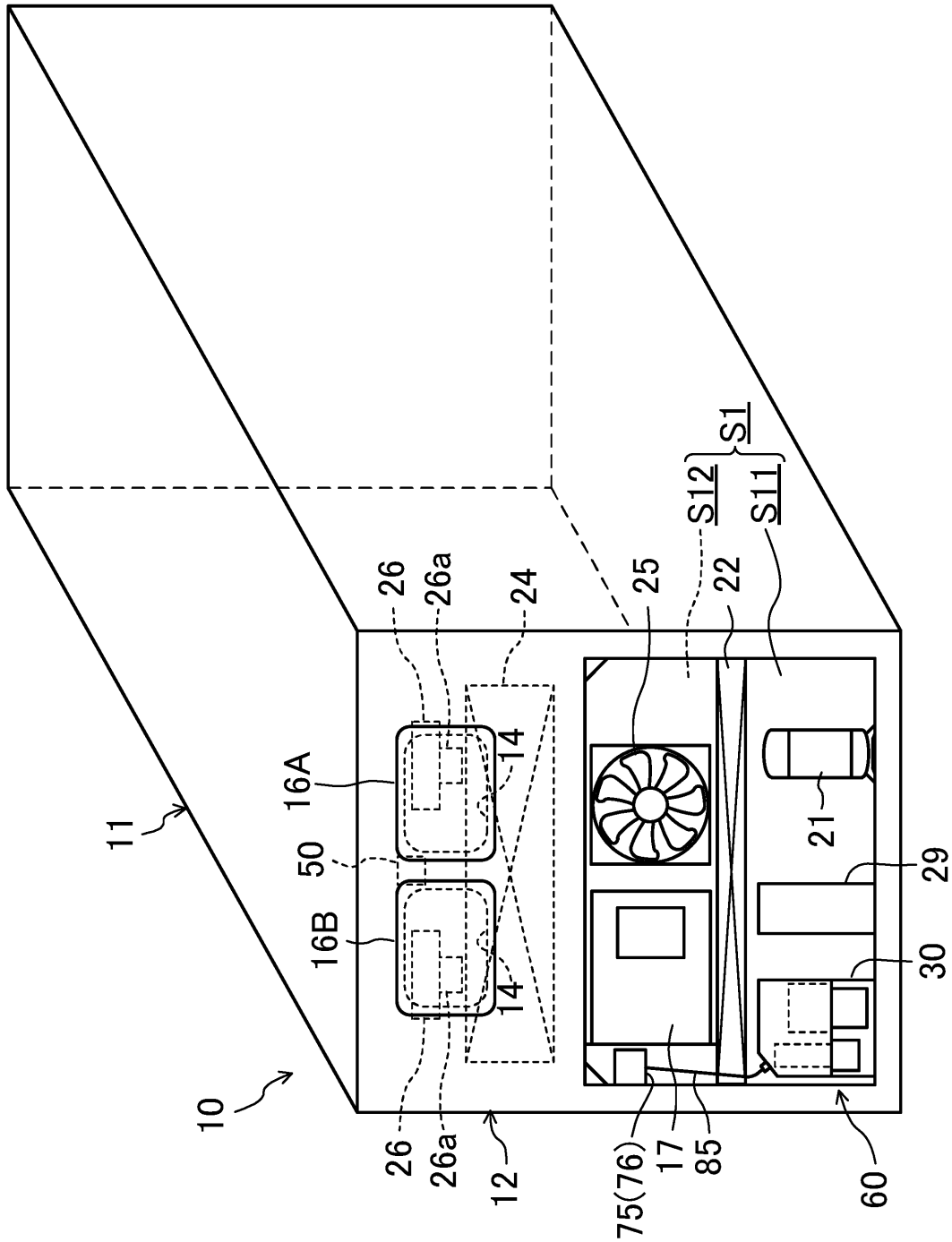
10
11
12
16A
16B
14
14
50
26
26a
26
26a
24
25
22
S12
S11
S1
21
29
30
75(76)
17
85
60

FIG.2

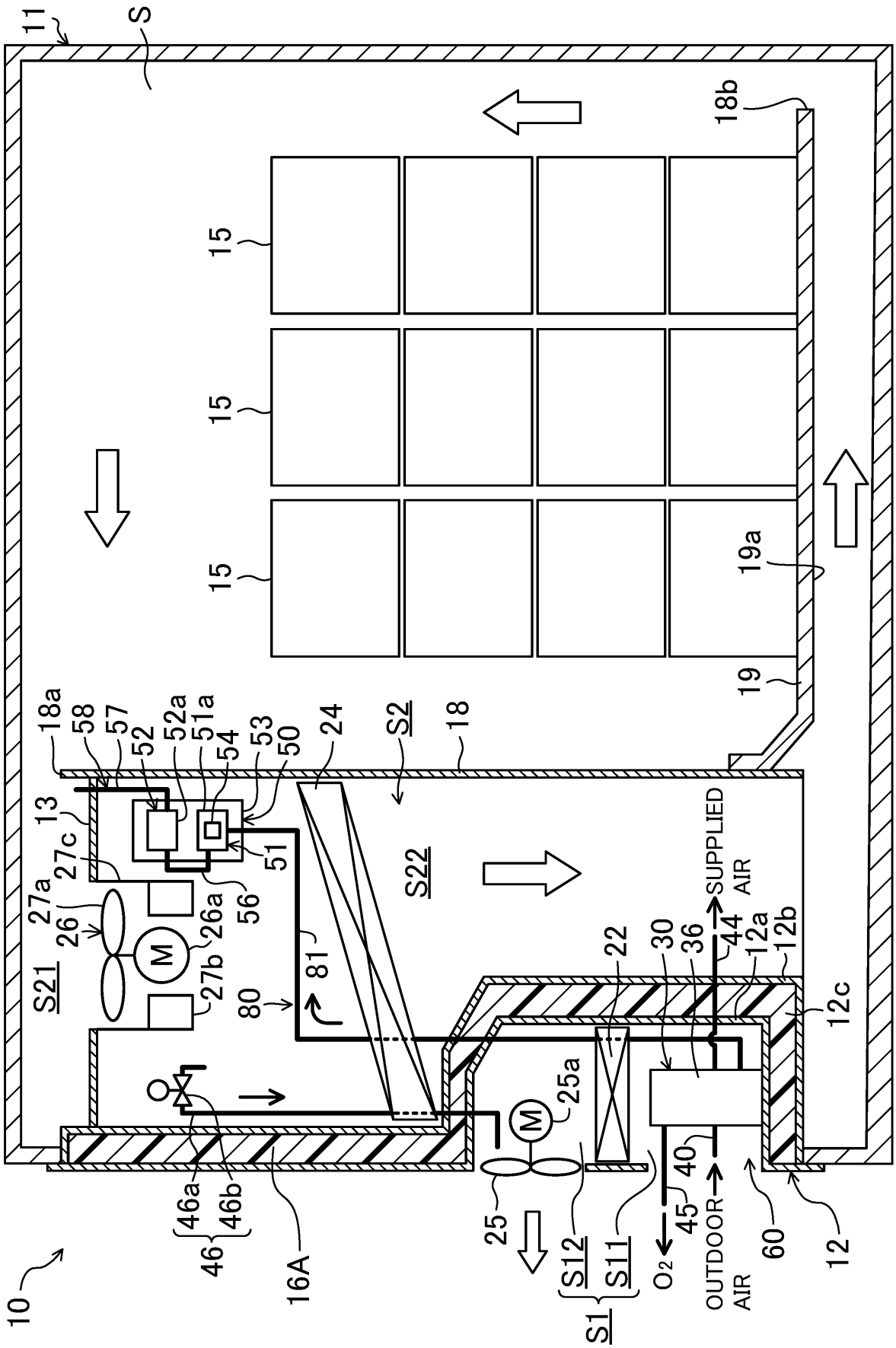
11
S
18b
15
15
15
19a
19
18a
58
57
52
52a
51a
54
53
50
24
S2
18
13
27c
27a
26
26a
56
51
S22
SUPPLIED AIR
S21
27b
80
81
22
30
36
44
12a
12b
12c
25a
46a
46b
46
16A
25
S12
S11
S1
O2
45
40
OUTDOOR AIR
60
12
10

FIG.3

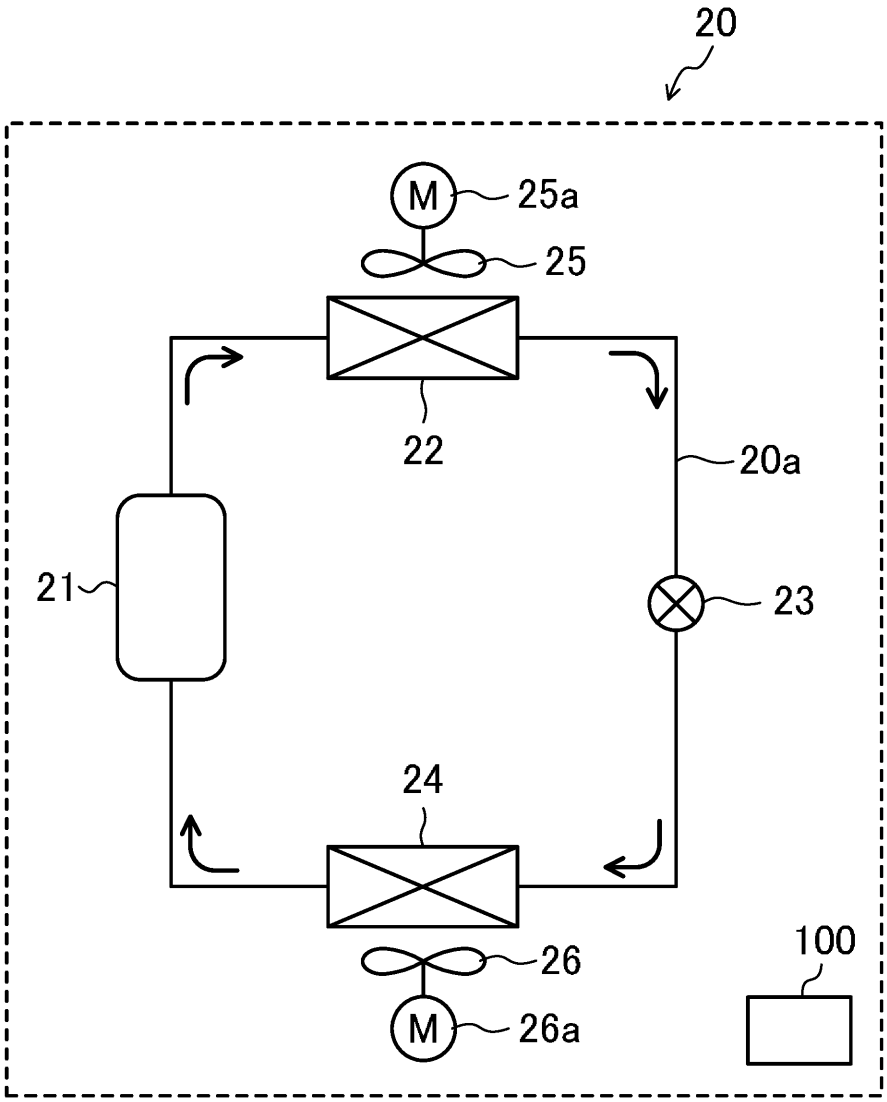

FIG.4

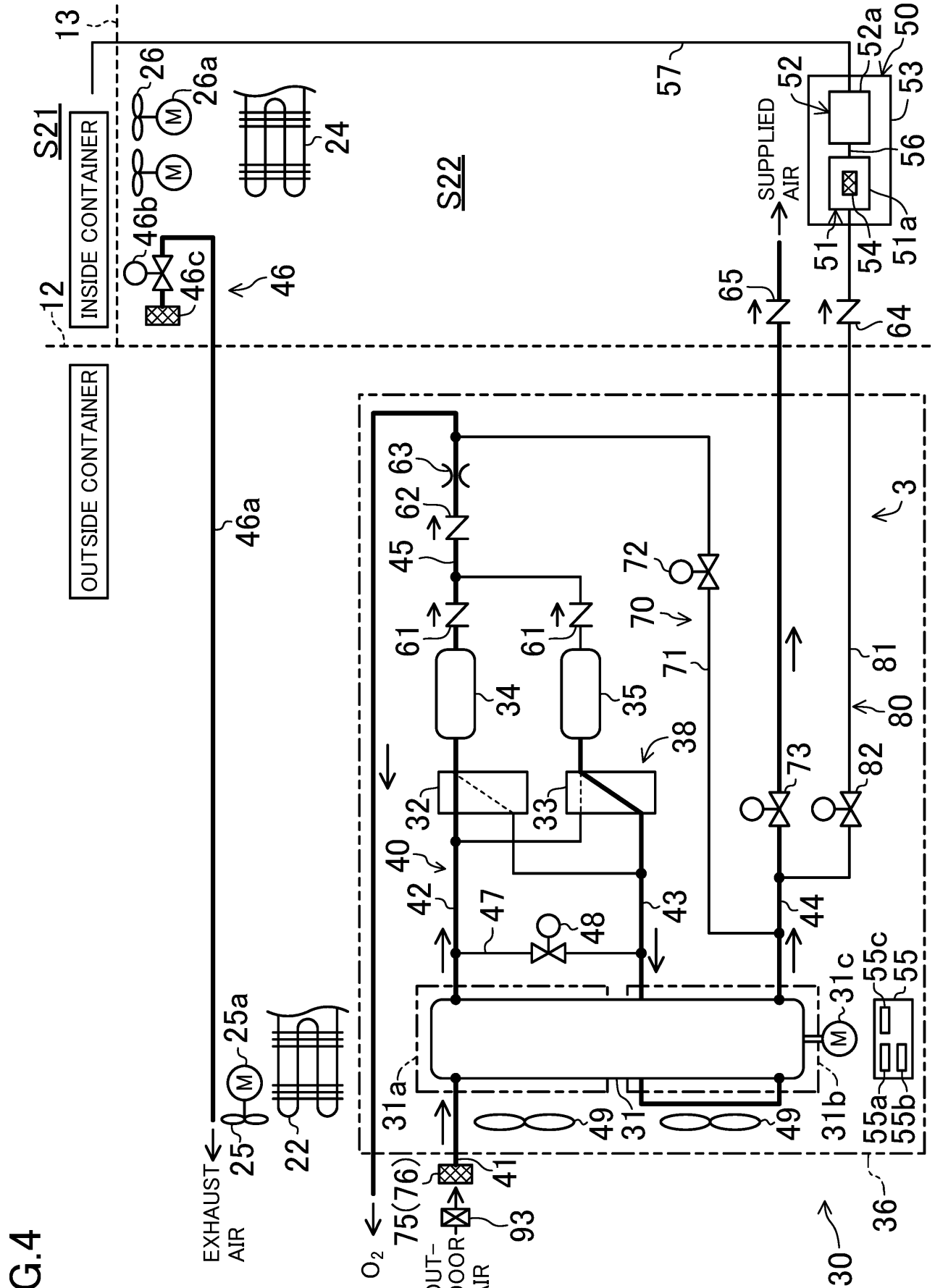
S21
S22
INSIDE CONTAINER
OUTSIDE CONTAINER
SUPPLIED AIR
EXHAUST AIR
OUT-DOOR AIR
O_2
12
13
22
24
25
25a
26
26a
30
31
31a
31b
31c
32
33
34
35
36
38
40
41
42
43
44
45
46
46a
46b
46c
47
48
49
50
51
51a
52
52a
53
54
55
55a
55b
55c
56
57
61
62
63
64
65
70
71
72
73
75(76)
80
81
82
93

FIG.5

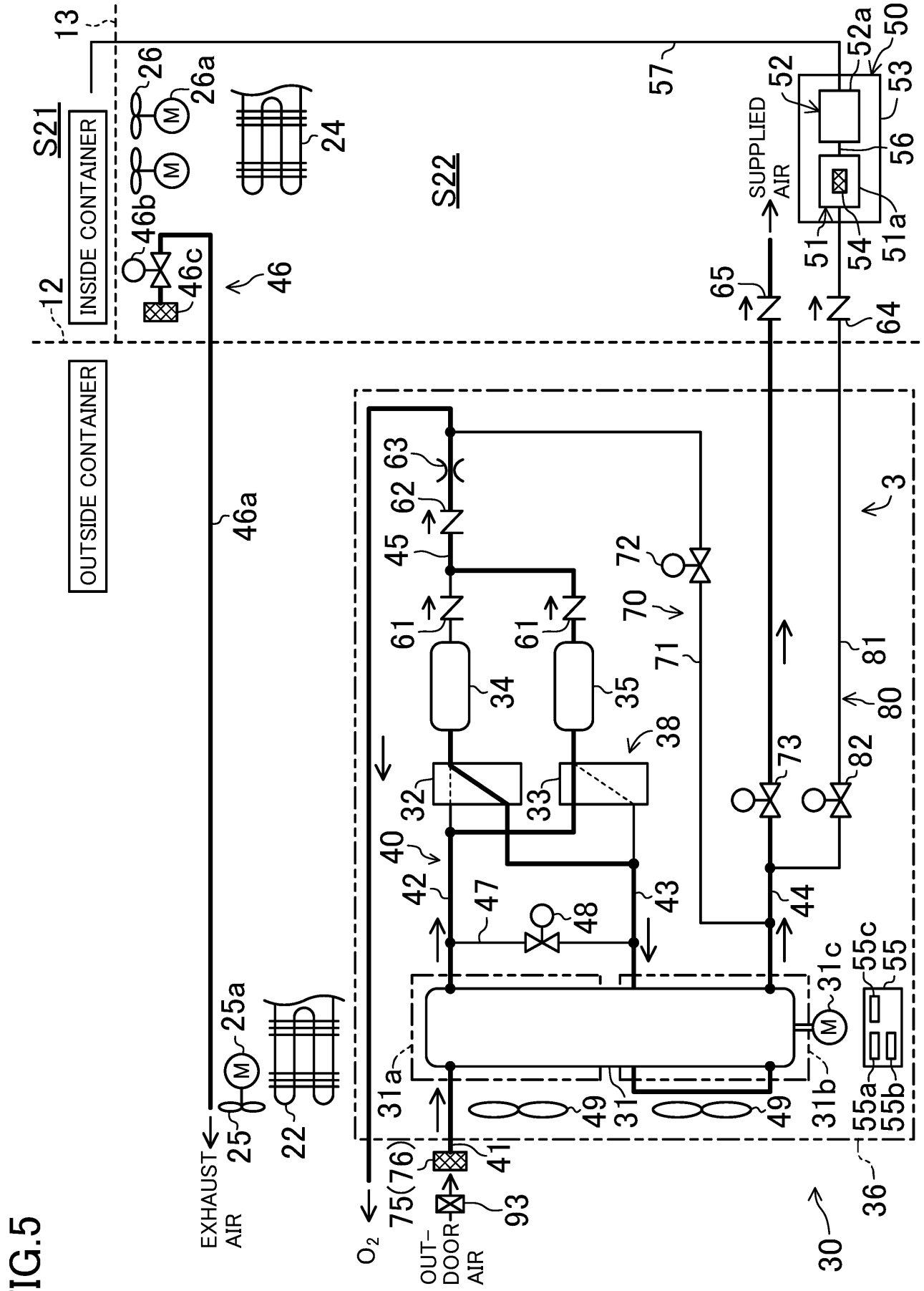
S21
S22
INSIDE CONTAINER
OUTSIDE CONTAINER
EXHAUST AIR
OUT-DOOR AIR
SUPPLIED AIR
O_2
12
13
22
24
25
25a
26
26a
30
31
31a
31b
31c
32
33
34
35
36
38
40
41
42
43
44
45
46
46a
46b
46c
47
48
49
50
51
51a
52
52a
53
54
55
55a
55b
55c
56
57
61
62
63
64
65
70
71
72
73
75(76)
80
81
82
93
3

FIG.6

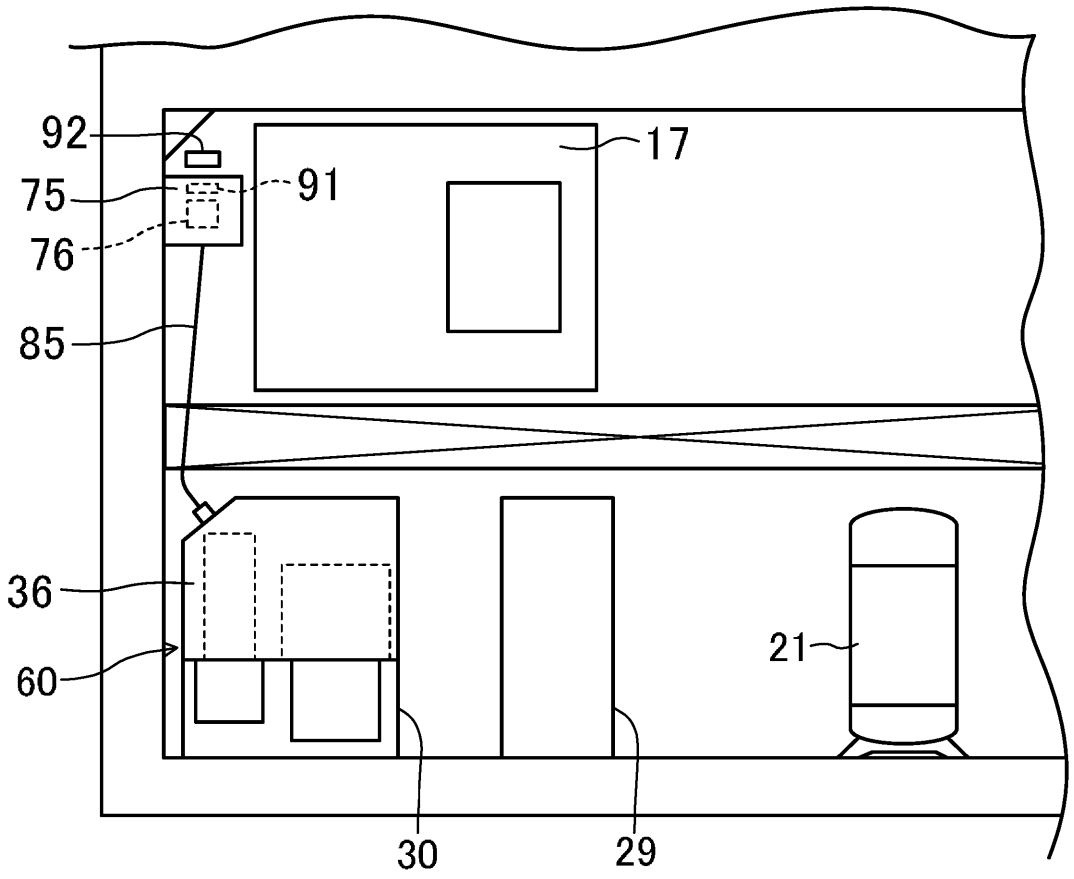

FIG.7

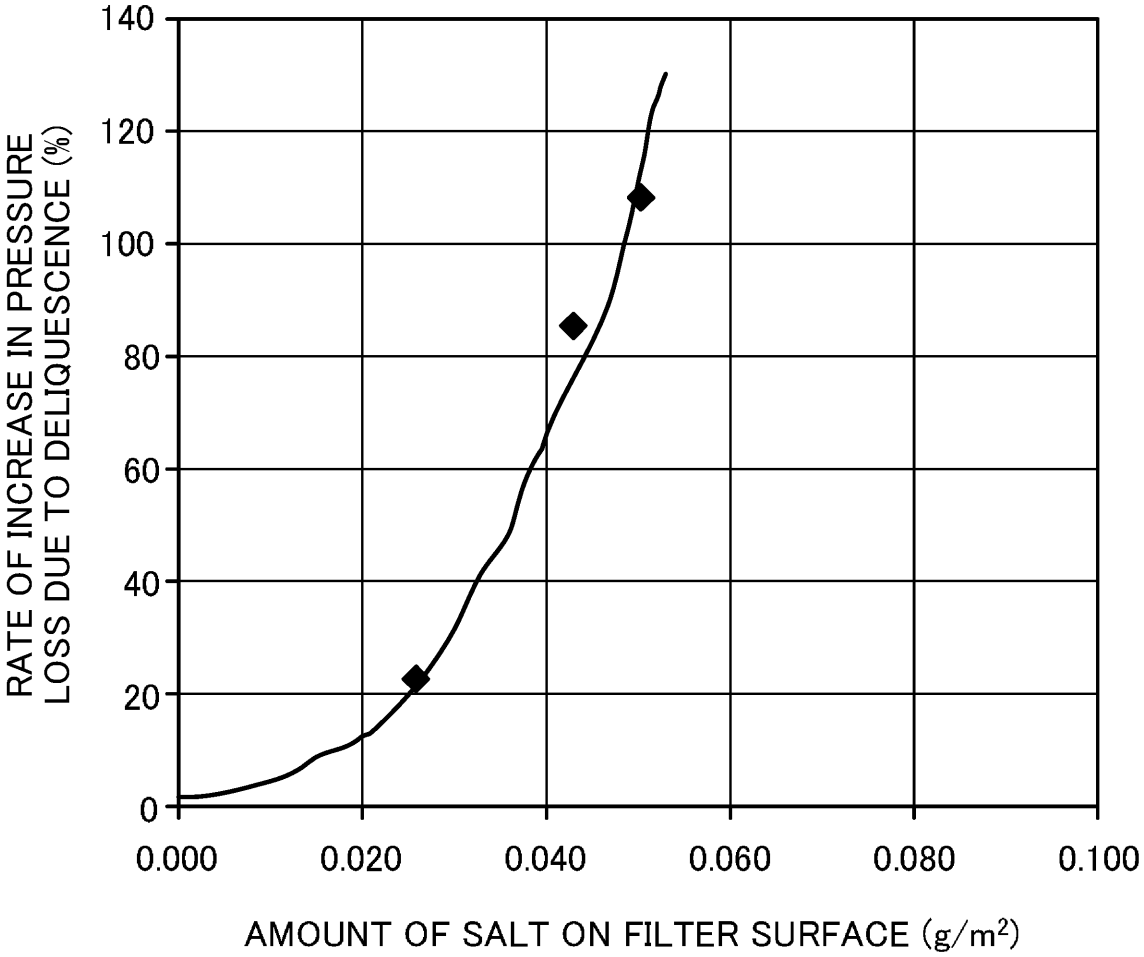
RATE OF INCREASE IN PRESSURE LOSS DUE TO DELIQUESCENCE (%)
140
120
100
80
60
40
20
0
0.000
0.020
0.040
0.060
0.080
0.100
AMOUNT OF SALT ON FILTER SURFACE (g/m2)

FIG.8

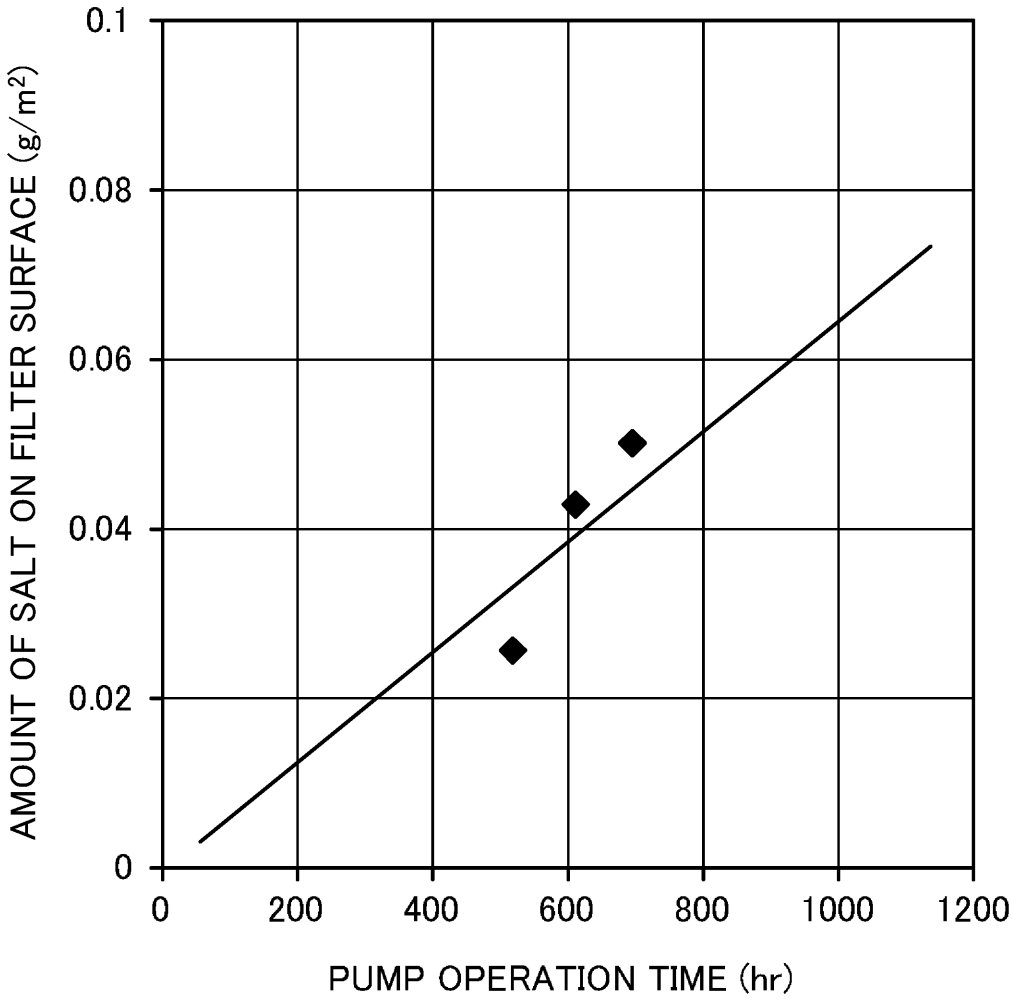
0.1
0.08
0.06
0.04
0.02
0
AMOUNT OF SALT ON FILTER SURFACE (g/m²)
0
200
400
600
800
1000
1200
PUMP OPERATION TIME (hr)