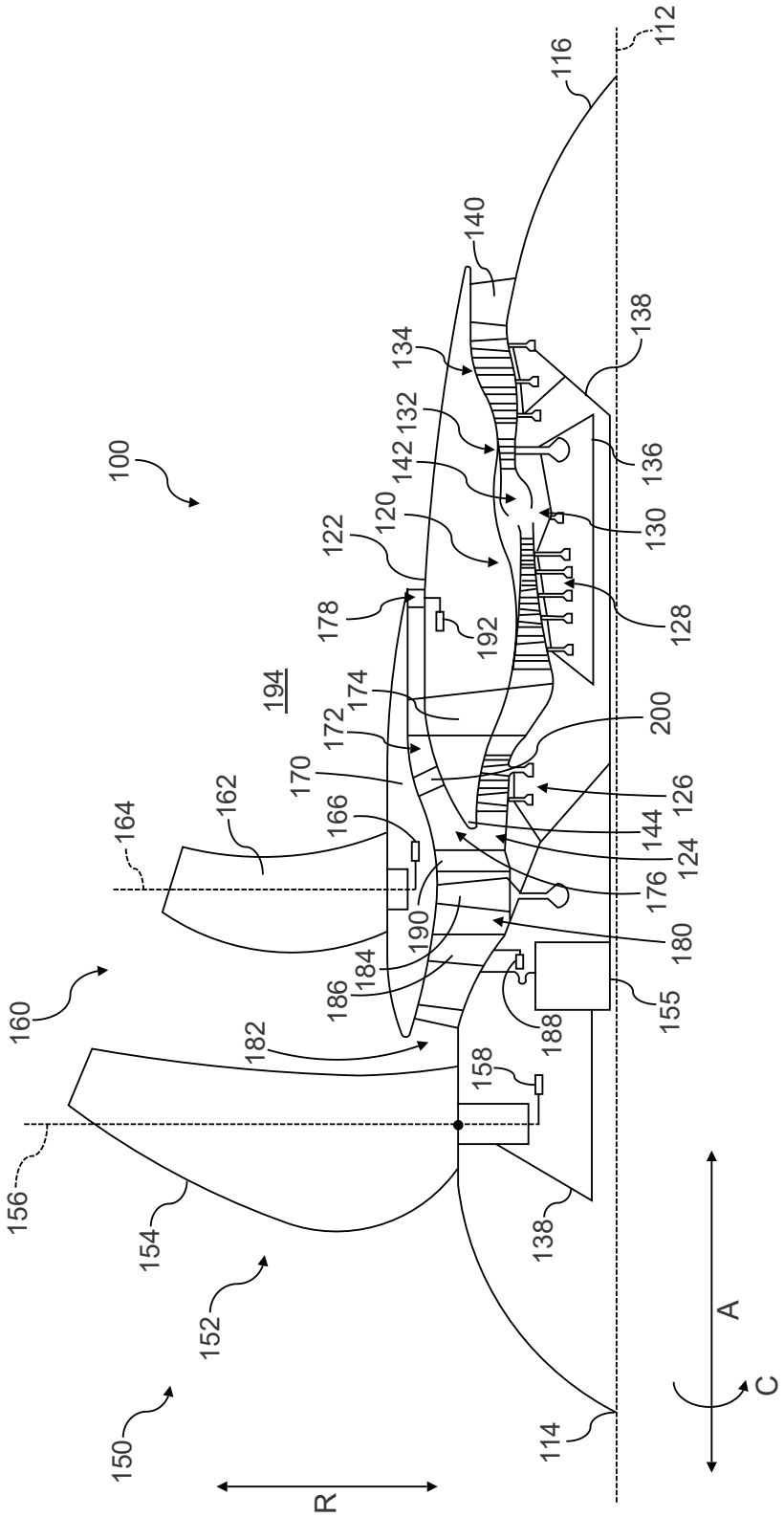
100
112
116
140
134
138
132
136
142
130
120
122
128
178
192
194
174
200
172
170
126
162
166
144
164
124
176
190
180
184
186
155
188
160
182
158
156
154
152
138
150
114
R
A
C

FIG. 1

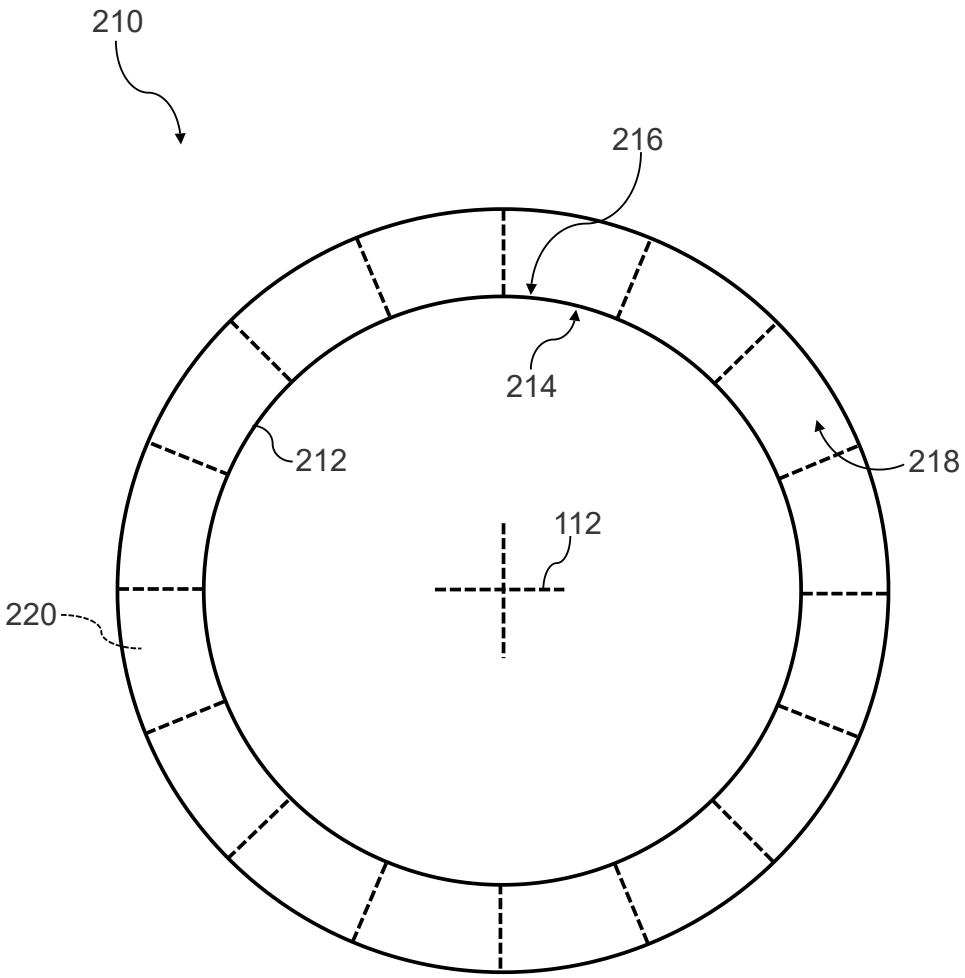

FIG. 2

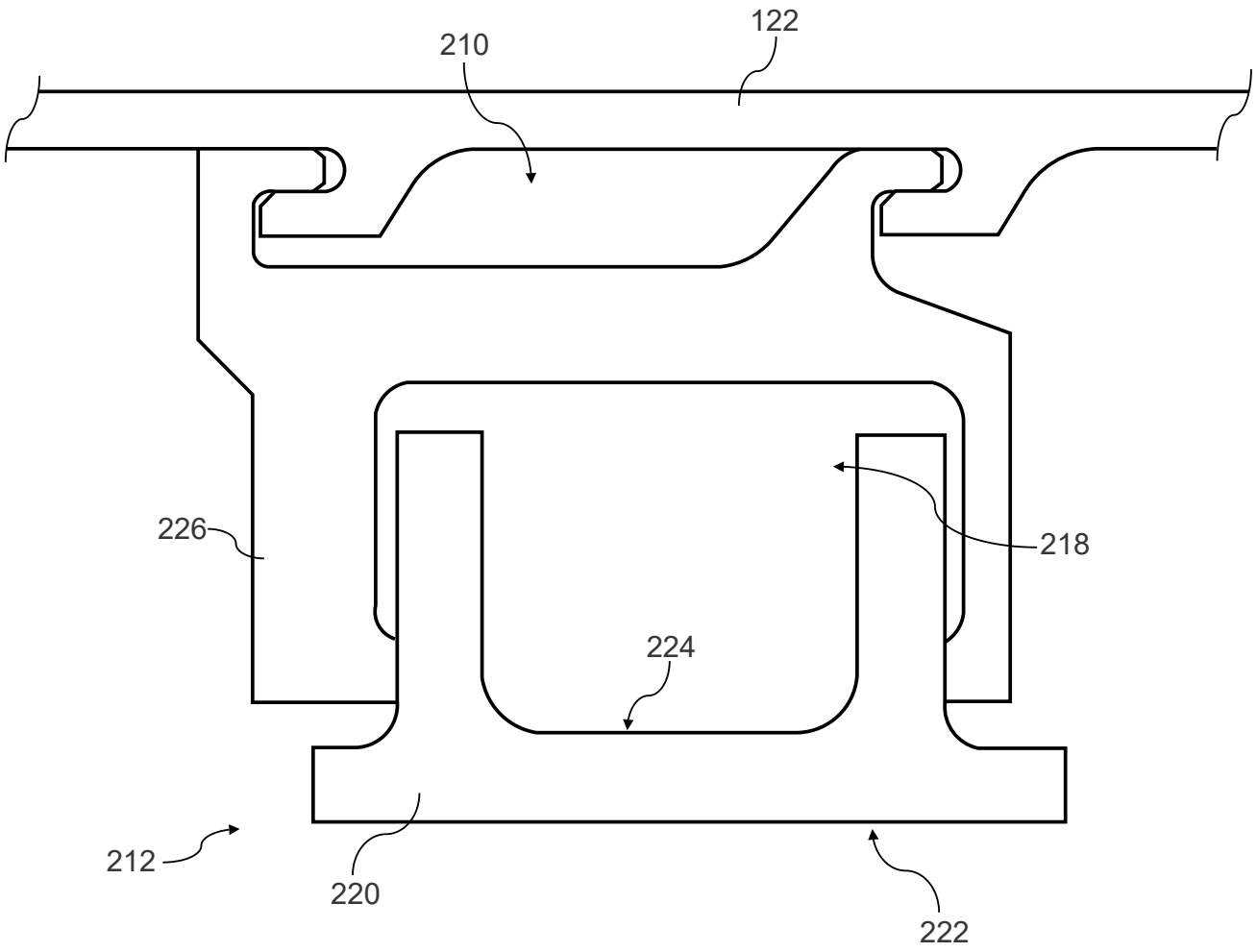

FIG. 3

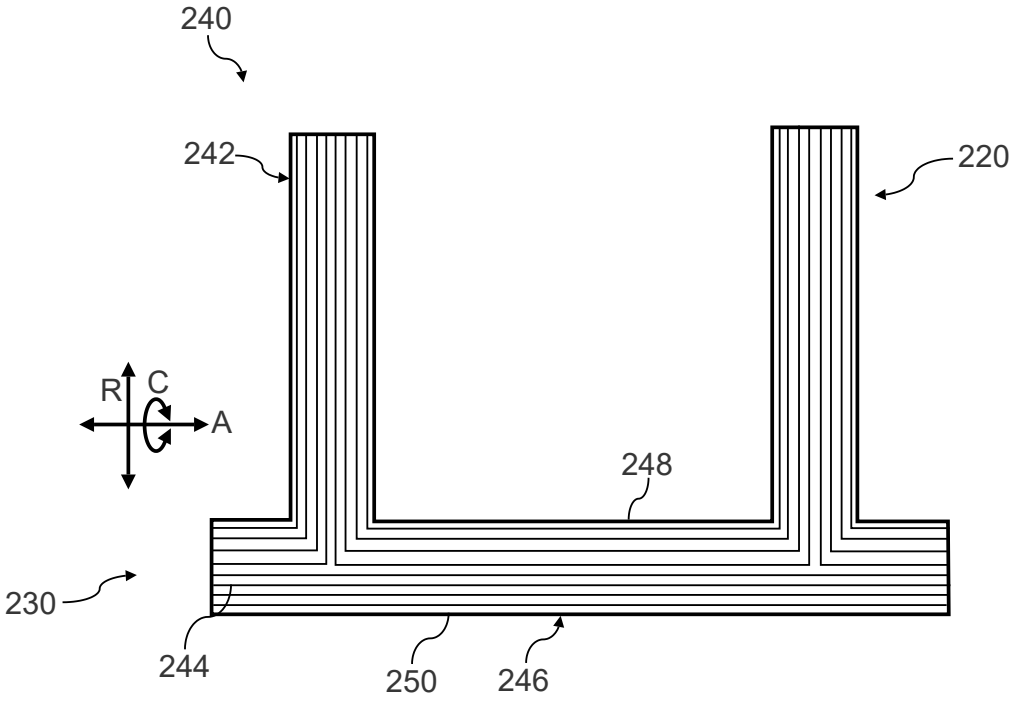
240
242
220
R
C
A
248
230
244
250
246

FIG. 4A

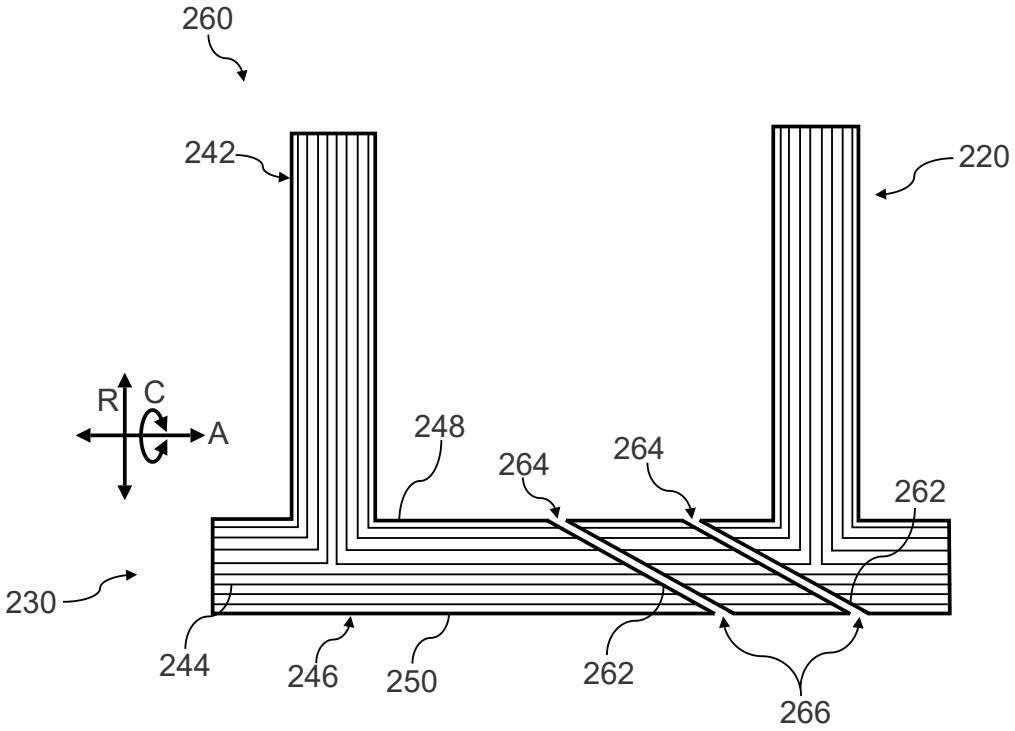
260
242
220
R
C
A
248
264
264
262
230
244
246
250
262
266

FIG. 4B

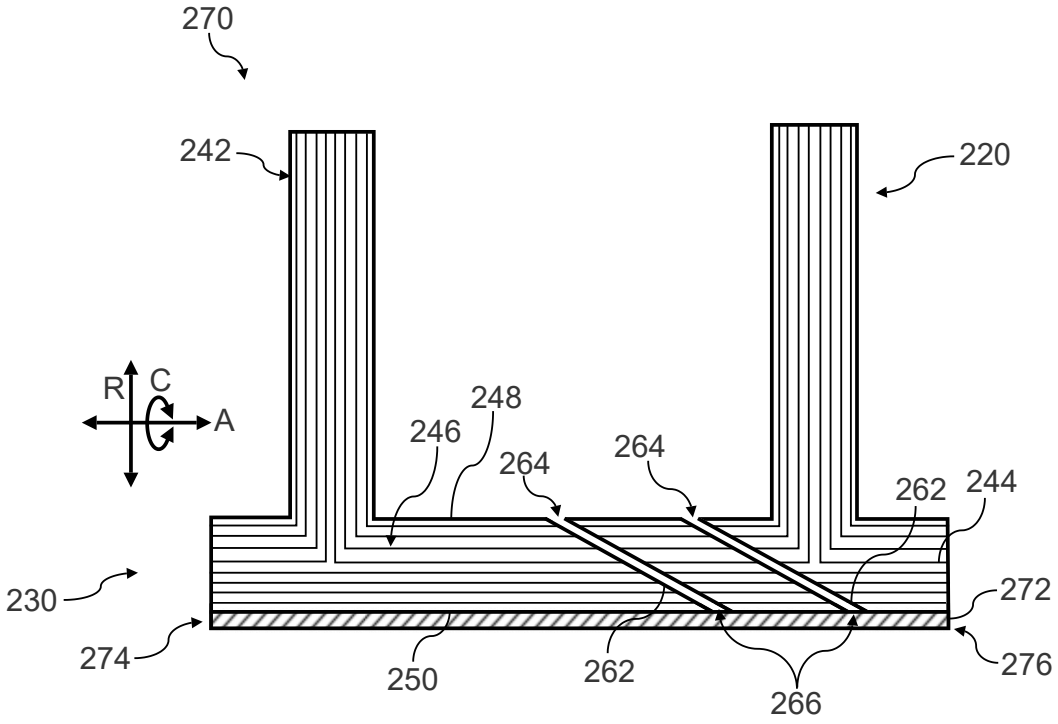
270
242
220
R
C
A
248
246
264
264
262
244
230
272
274
250
262
266
276

FIG. 4C

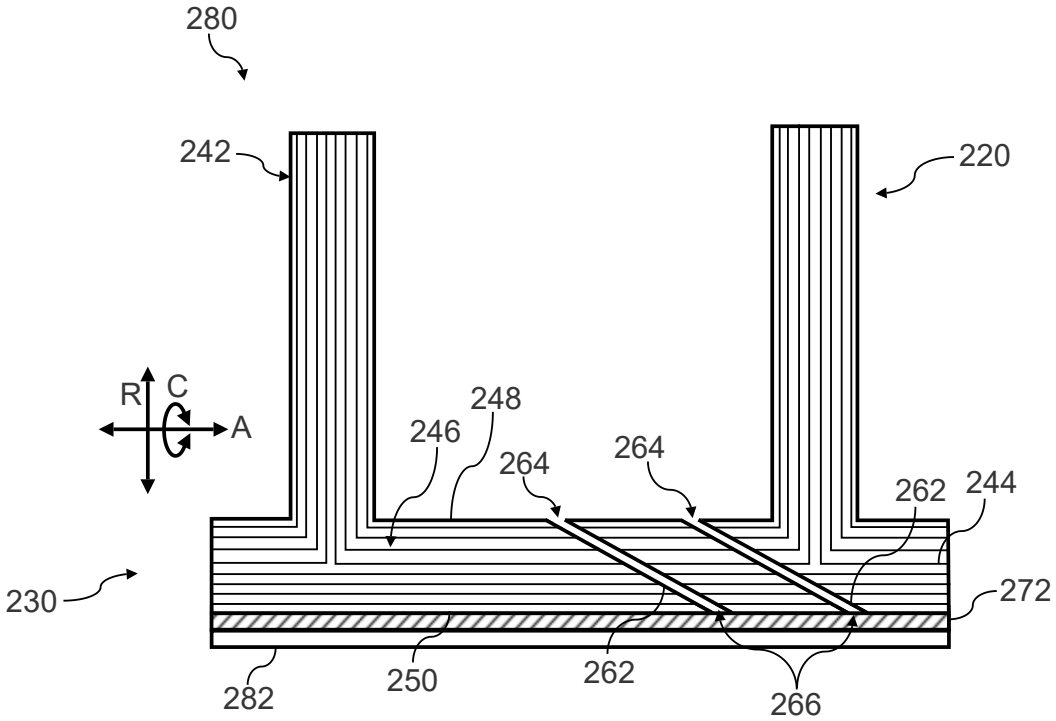
280
242
220
R
C
A
248
246
264
264
262
244
230
272
250
262
266
282

FIG. 4D

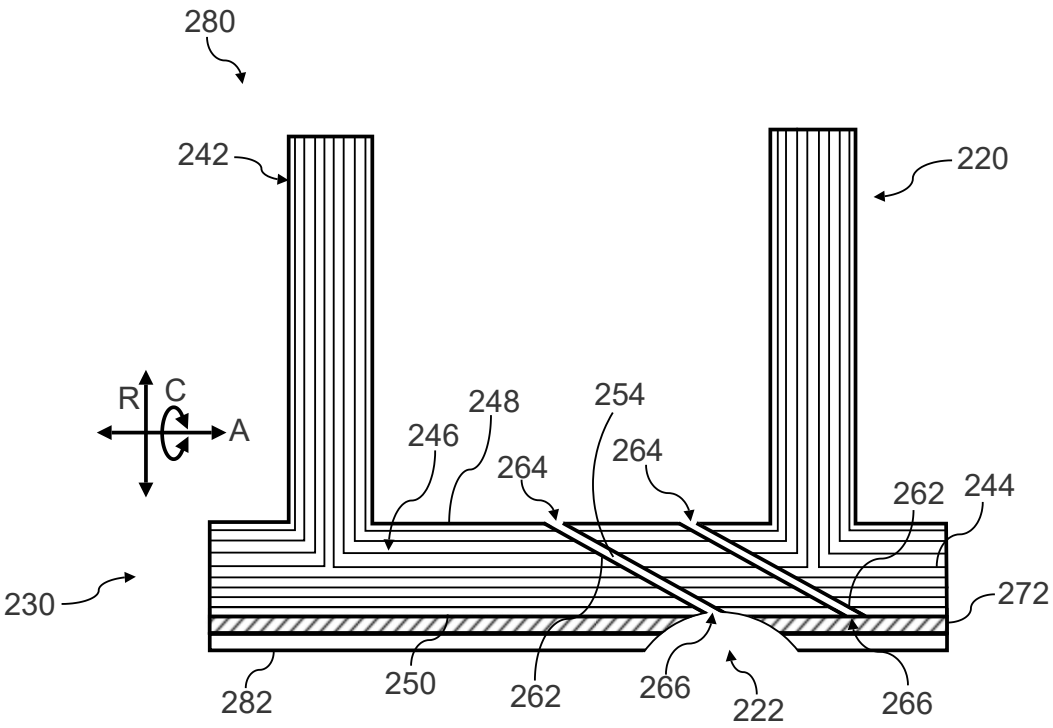
280
242
220
R
C
A
248
254
246
264
264
262
244
230
272
282
250
262
266
222
266

FIG. 4E

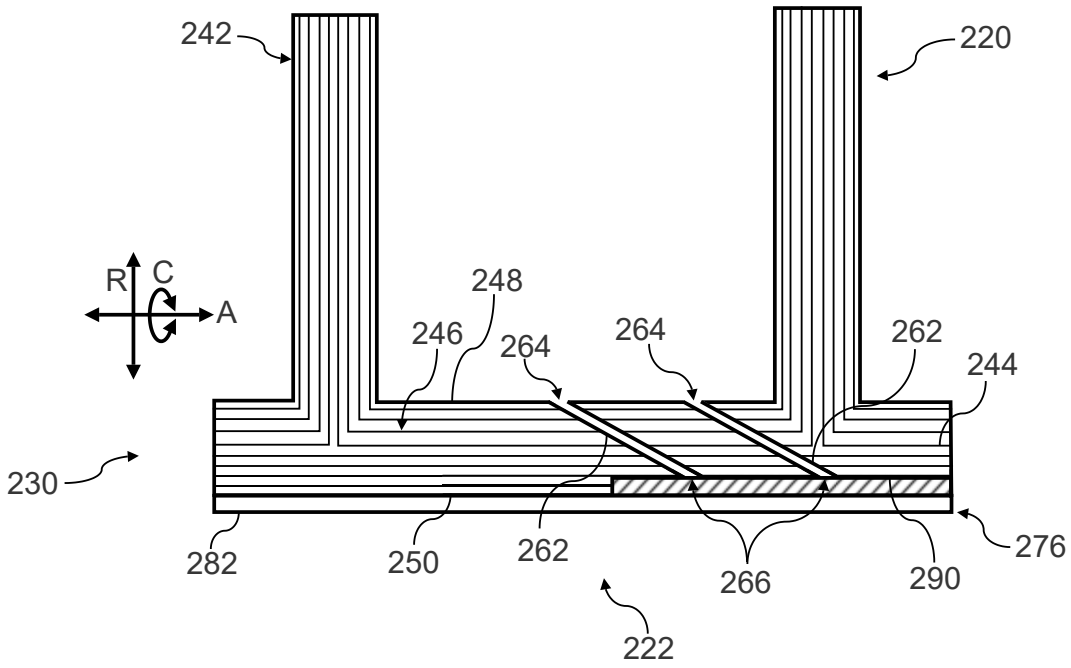
242
220
R
C
A
248
246
264
264
262
244
230
282
250
262
266
290
276
222

FIG. 5

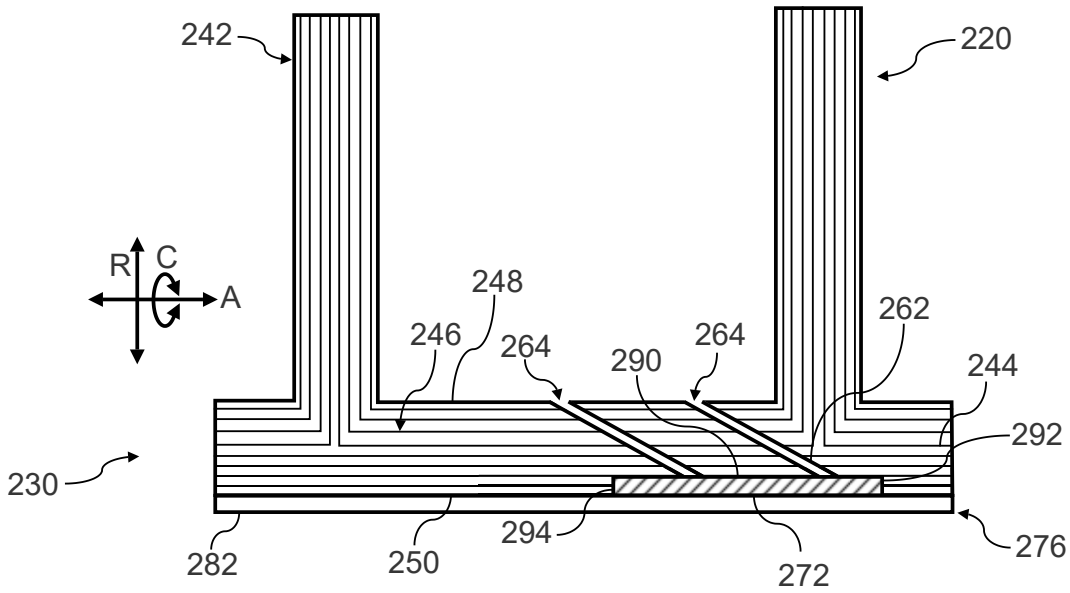
242
220
R
C
A
248
246
264
290
264
262
244
292
230
294
282
250
272
276

FIG. 6

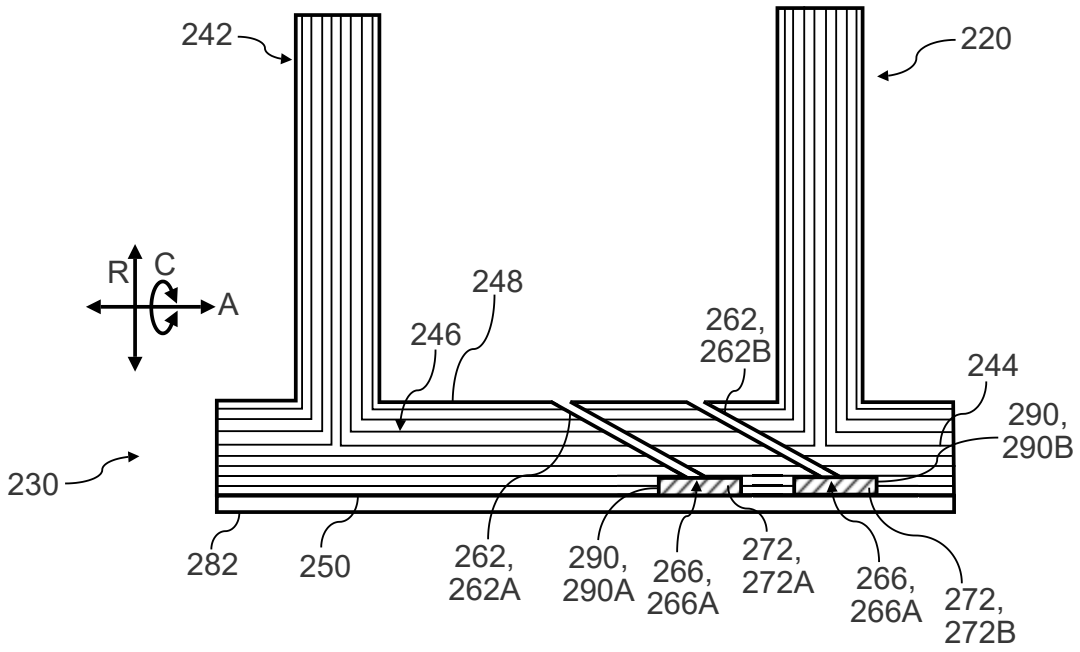
242
220
R
C
A
248
246
262,
262B
244
290,
290B
230
282
250
262,
262A
290,
290A
266,
266A
272,
272A
266,
266A
272,
272B

FIG. 7

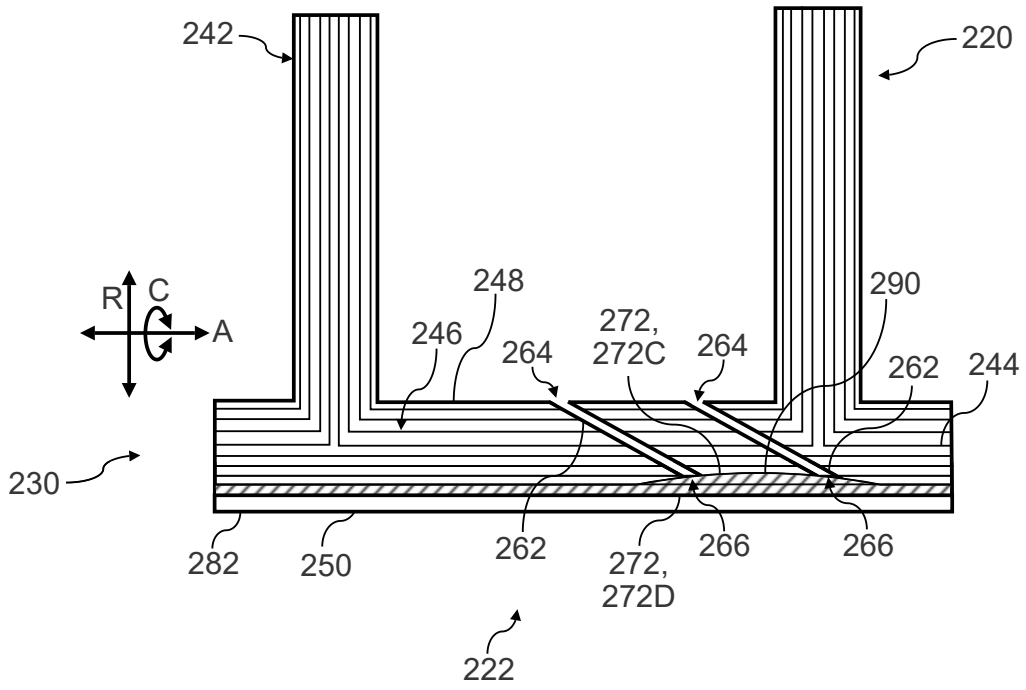
242
220
R
C
A
248
246
264
272,
272C
264
290
262
244
230
282
250
262
272,
272D
266
266
222

FIG. 8

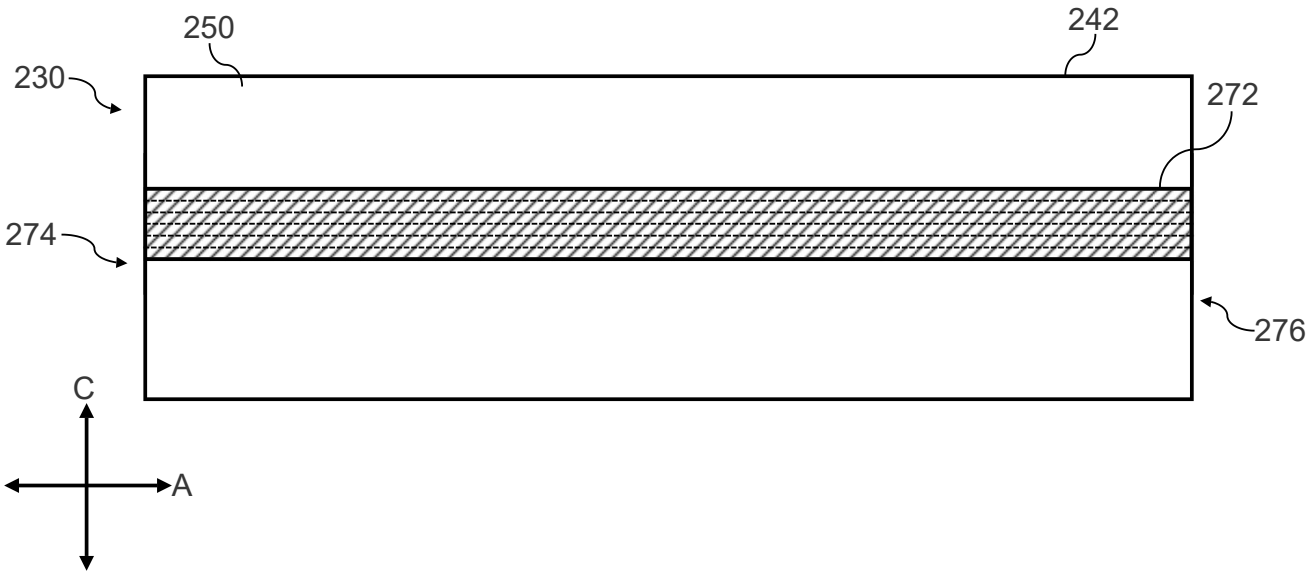

FIG. 9A

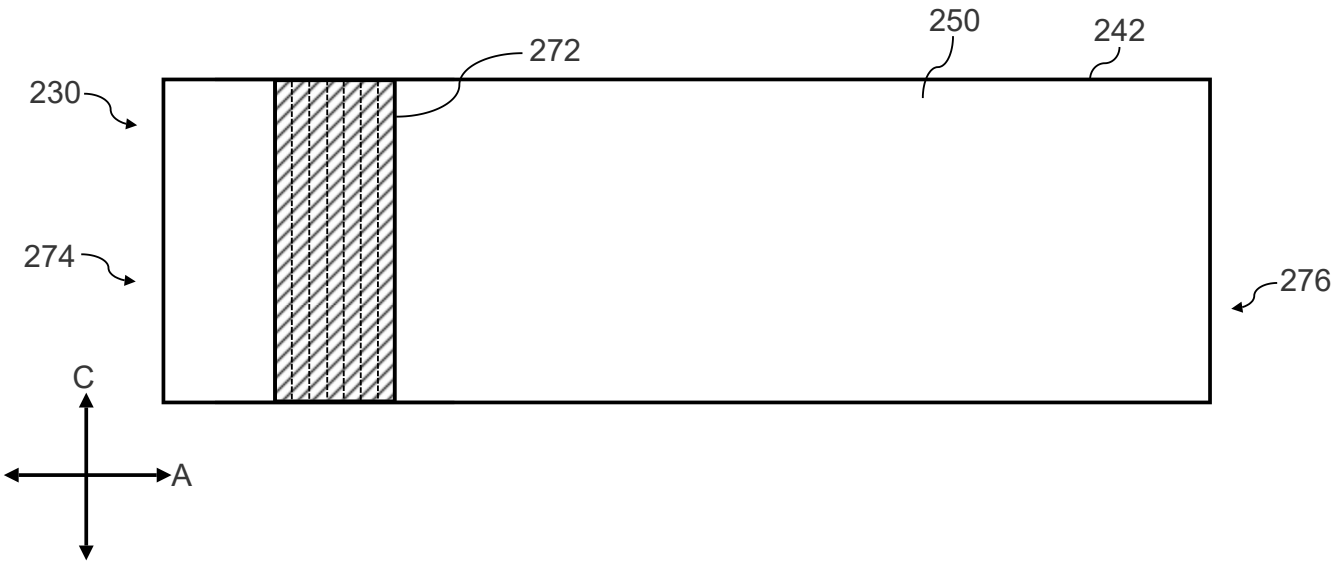

FIG. 9B

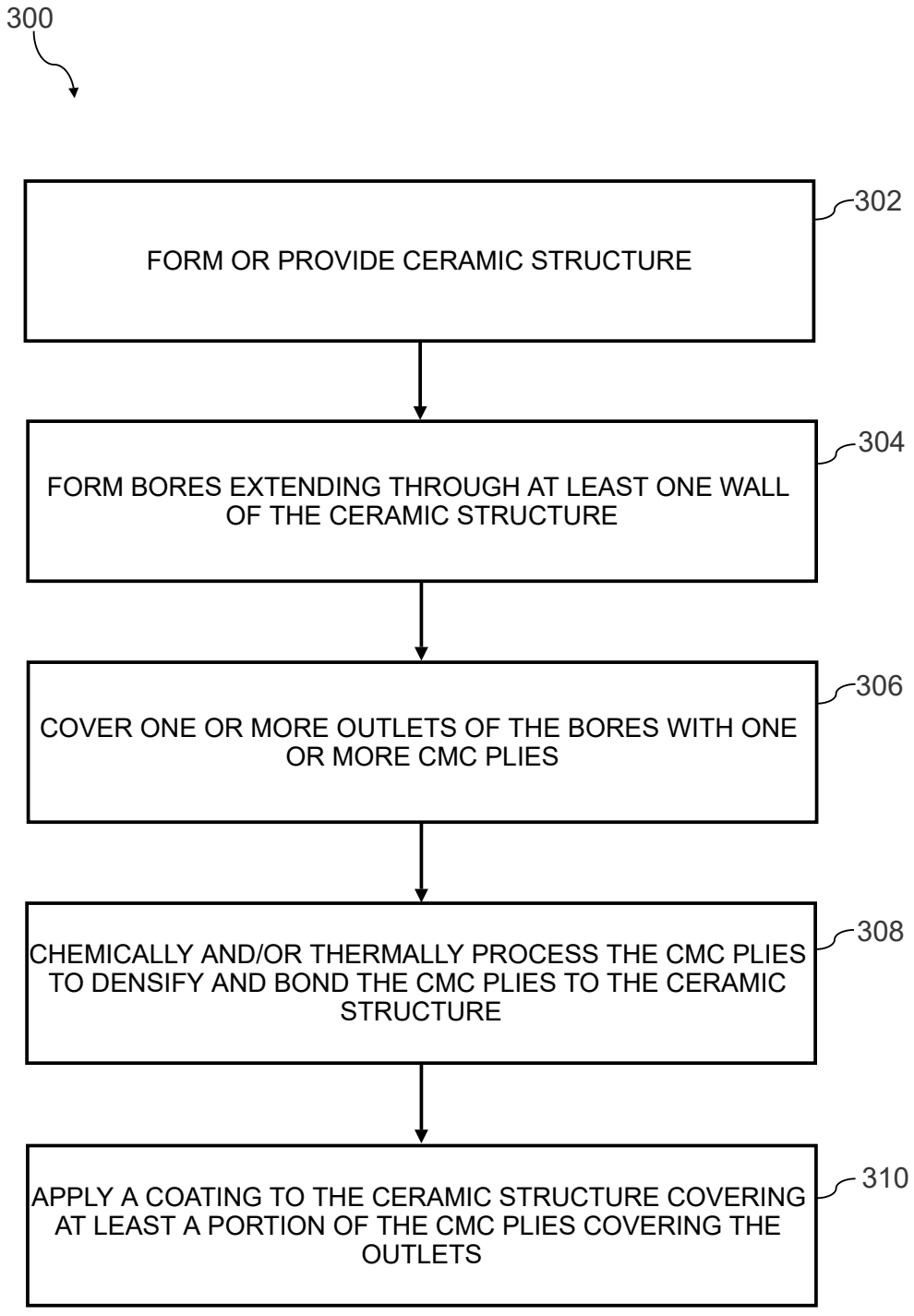
300
FORM OR PROVIDE CERAMIC STRUCTURE
302
FORM BORES EXTENDING THROUGH AT LEAST ONE WALL OF THE CERAMIC STRUCTURE
304
COVER ONE OR MORE OUTLETS OF THE BORES WITH ONE OR MORE CMC PLIES
306
CHEMICALLY AND/OR THERMALLY PROCESS THE CMC PLIES TO DENSIFY AND BOND THE CMC PLIES TO THE CERAMIC STRUCTURE
308
APPLY A COATING TO THE CERAMIC STRUCTURE COVERING AT LEAST A PORTION OF THE CMC PLIES COVERING THE OUTLETS
310

FIG. 10