【FIG. 1】

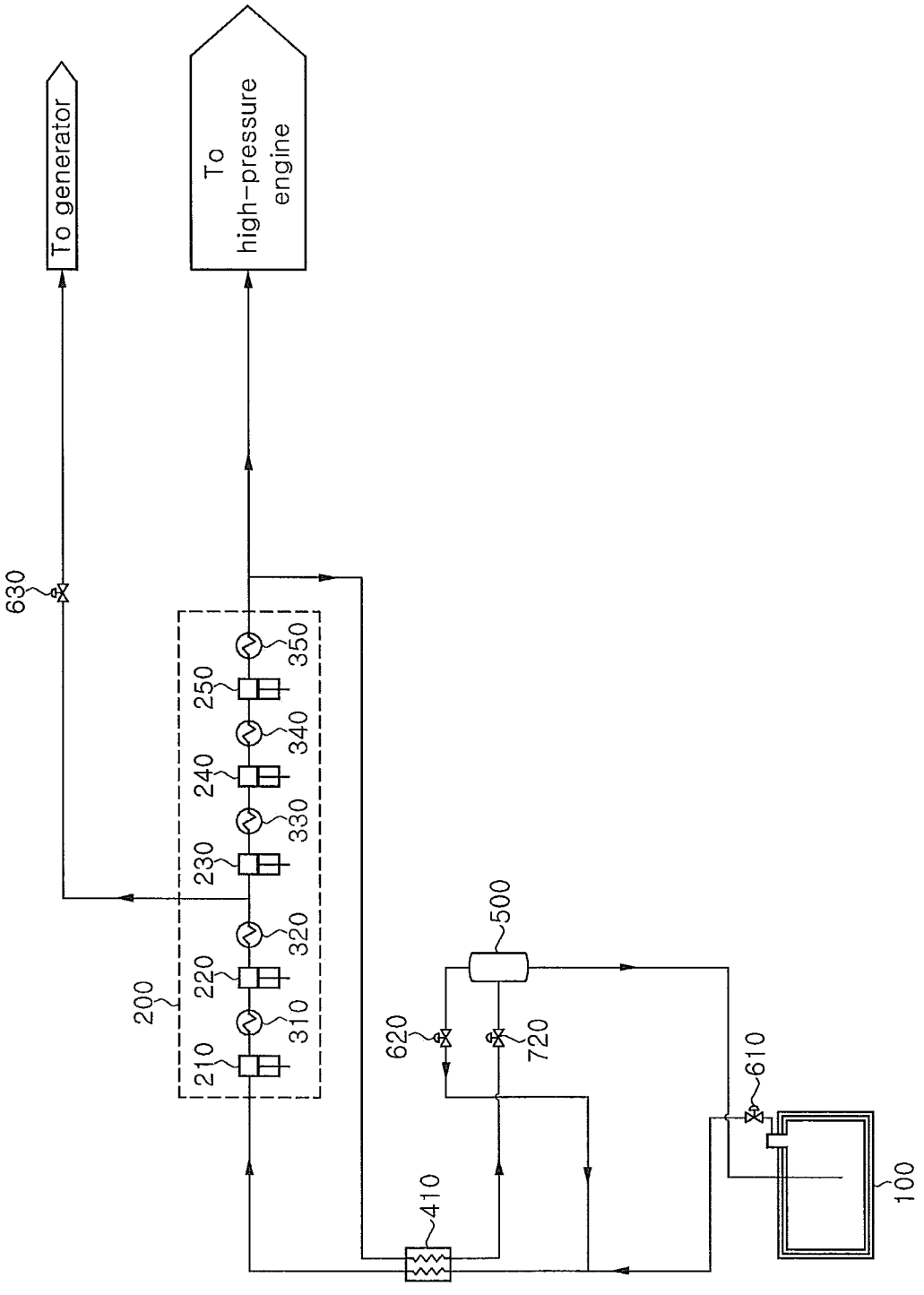
To generator
To high-pressure engine
630
350
250
340
240
330
230
320
220
310
210
200
500
620
720
610
410
100

【FIG. 2】

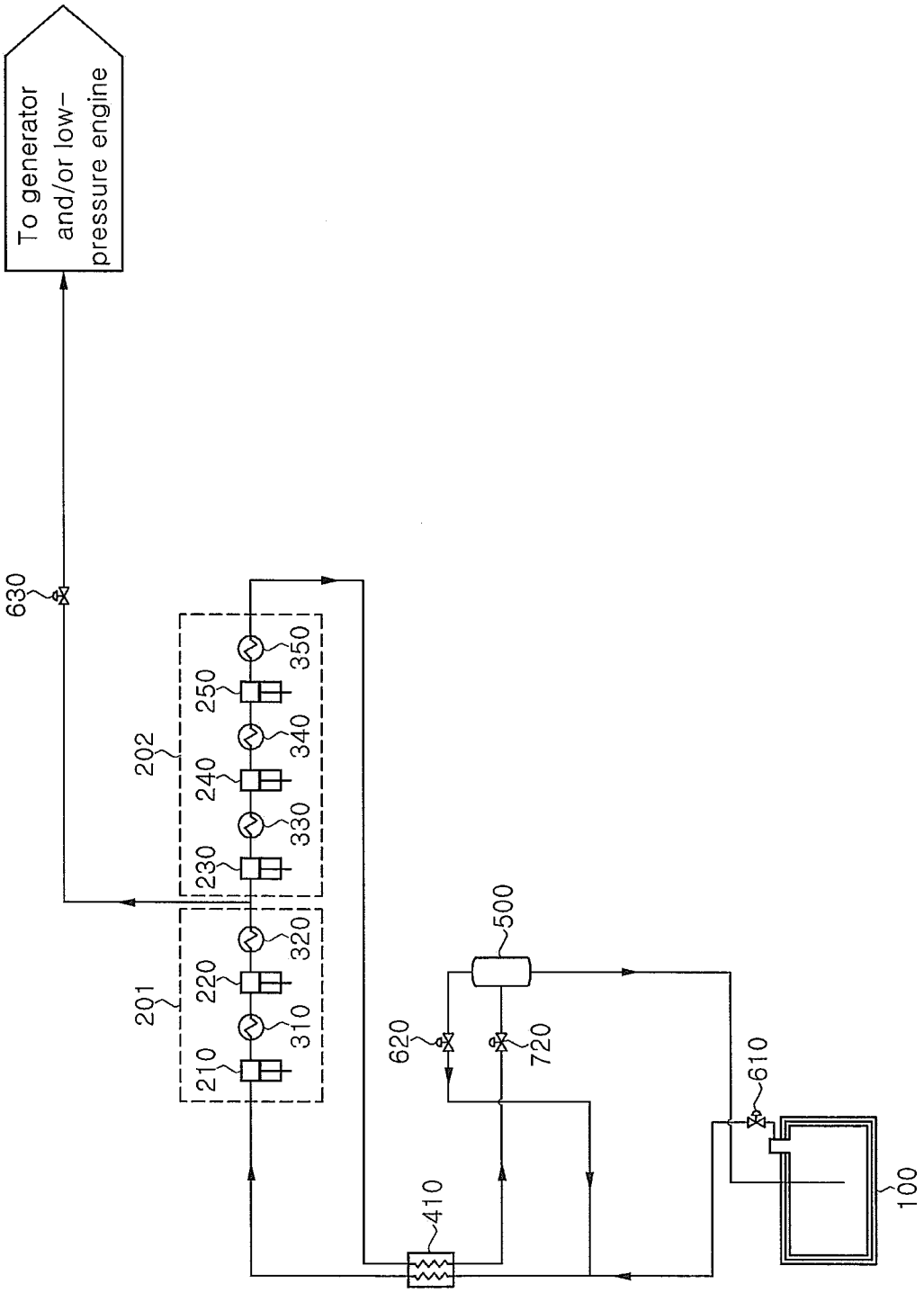
To generator and/or low-pressure engine
630
202
201
210
220
230
240
250
310
320
330
340
350
500
620
720
610
410
100

【FIG. 3】

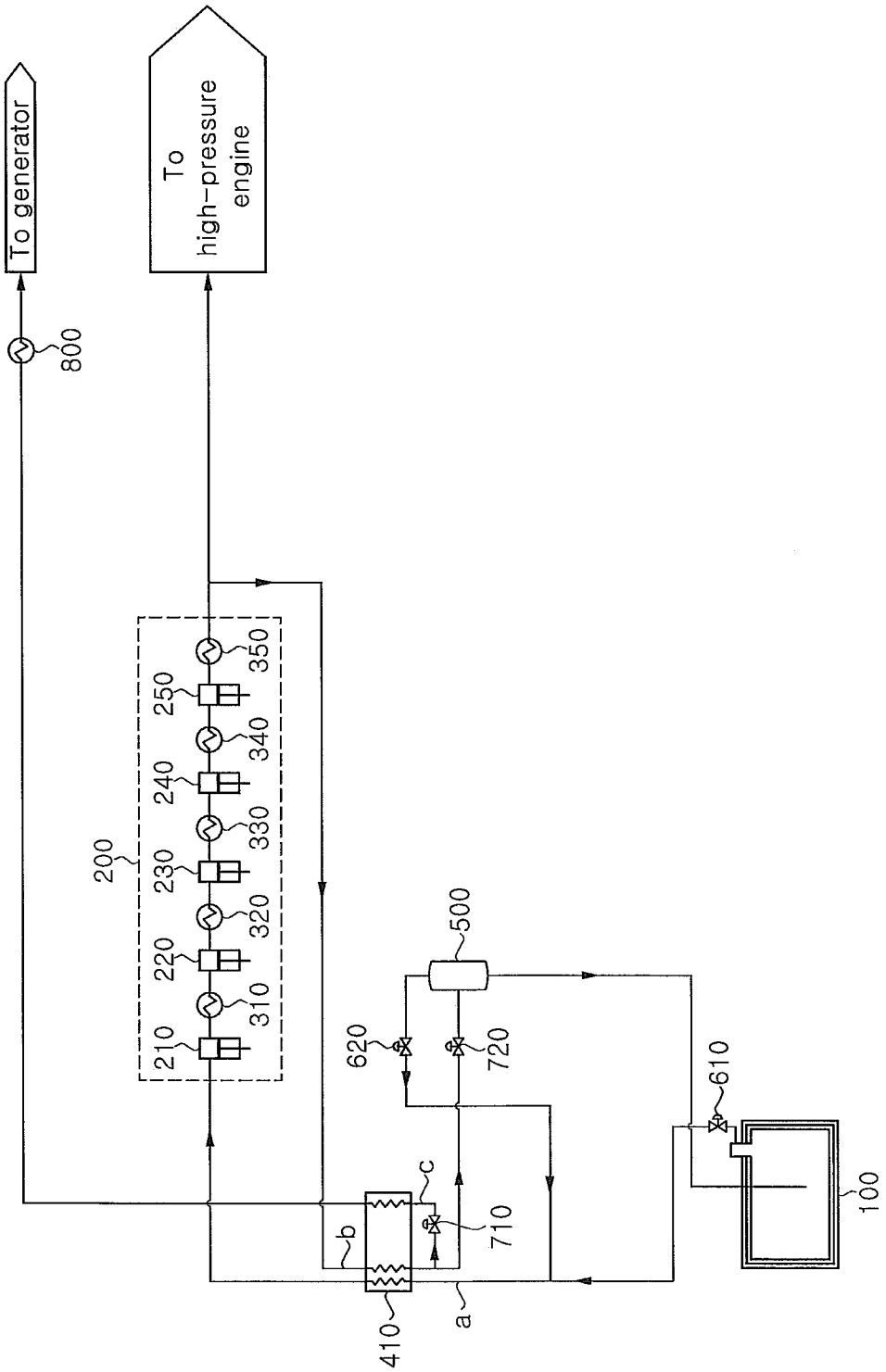
To generator
To high-pressure engine
800
200
210
220
230
240
250
310
320
330
340
350
500
620
720
610
100
710
a
b
c
410

【FIG. 4】

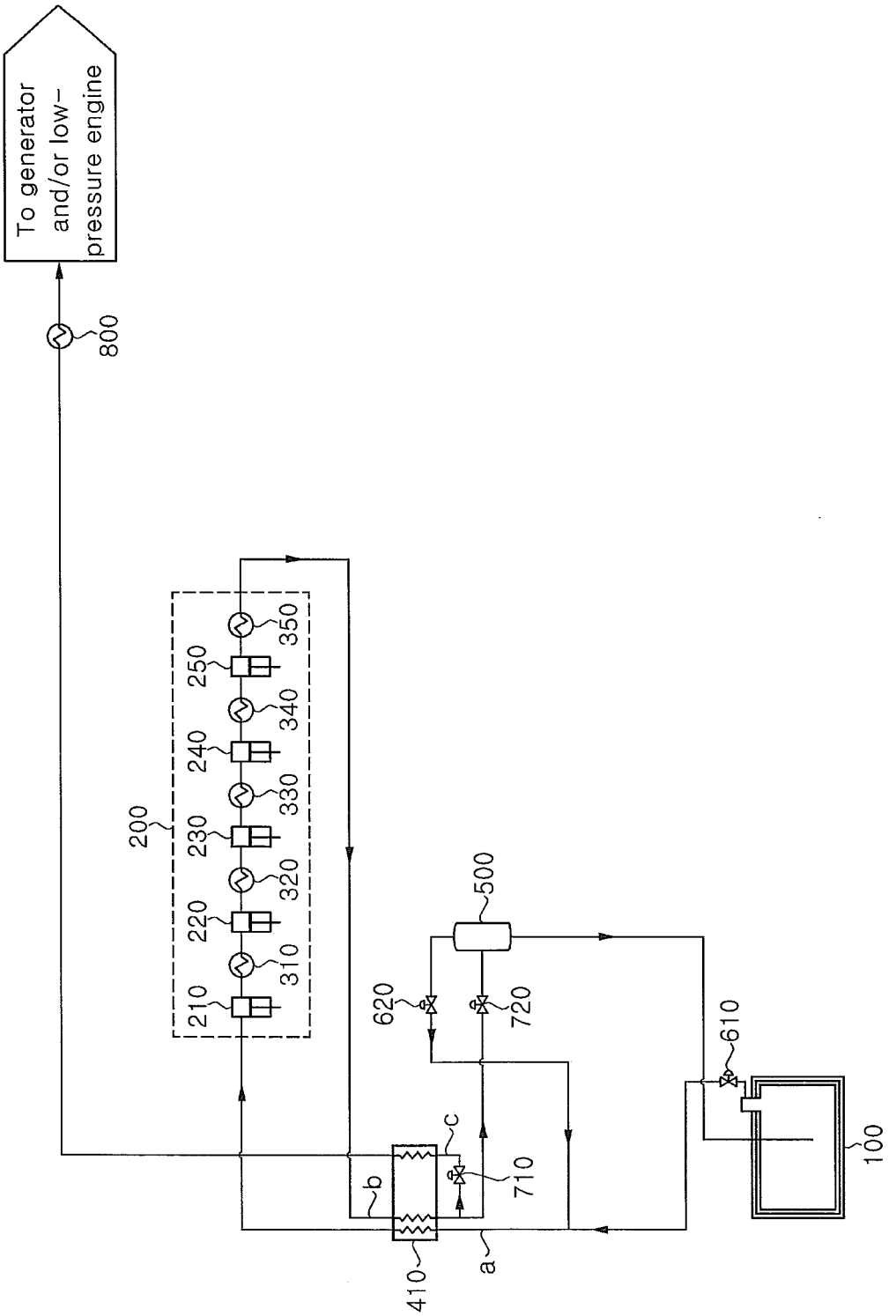
To generator and/or low-pressure engine
800
200
210
220
230
240
250
310
320
330
340
350
500
620
720
610
100
710
a
b
c
410

【FIG. 5】

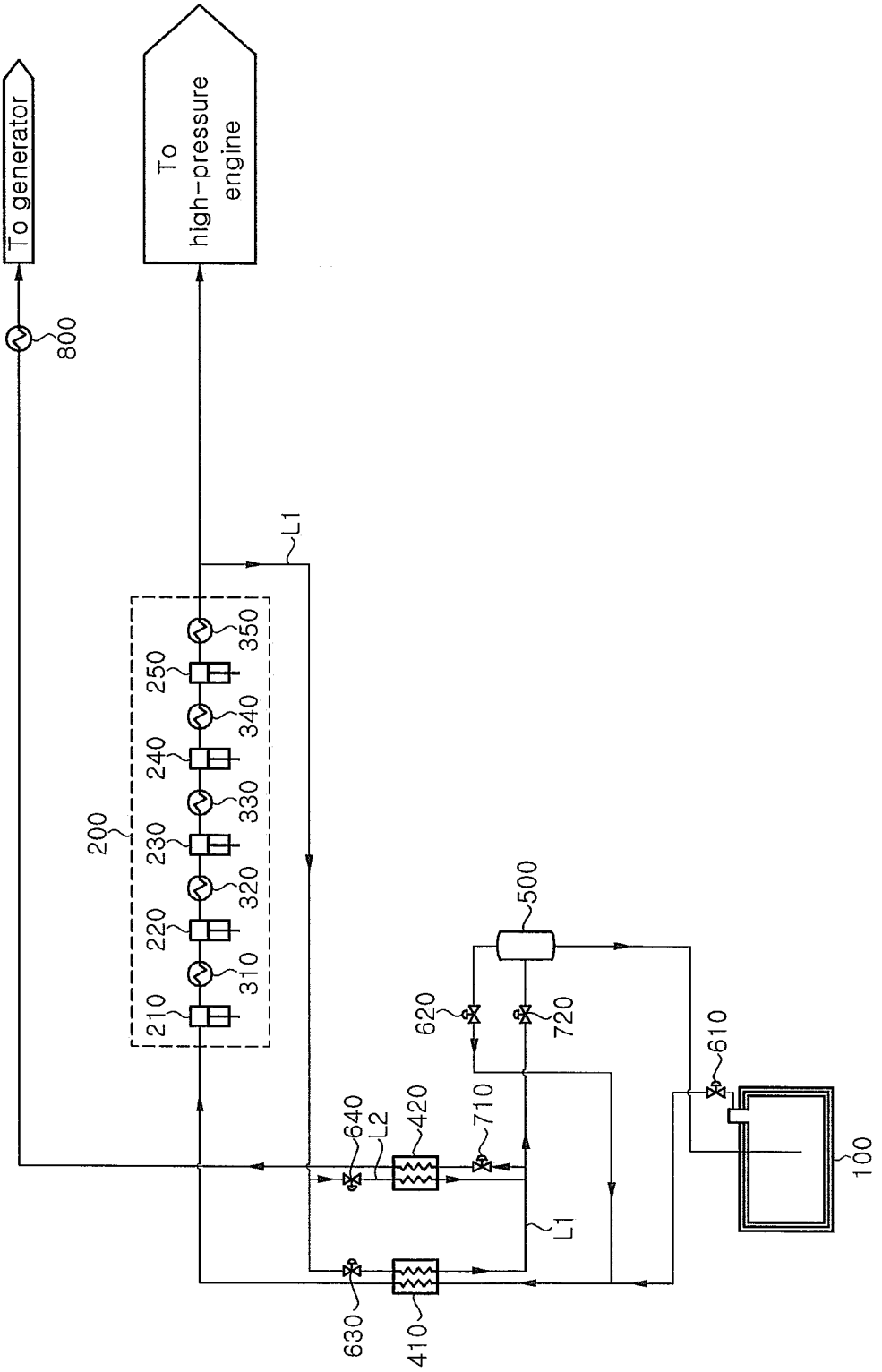
To generator
To high-pressure engine
800
L1
200
350
250
340
240
330
230
320
220
310
210
500
620
720
610
640
L2
420
710
100
L1
630
410

【FIG. 6】

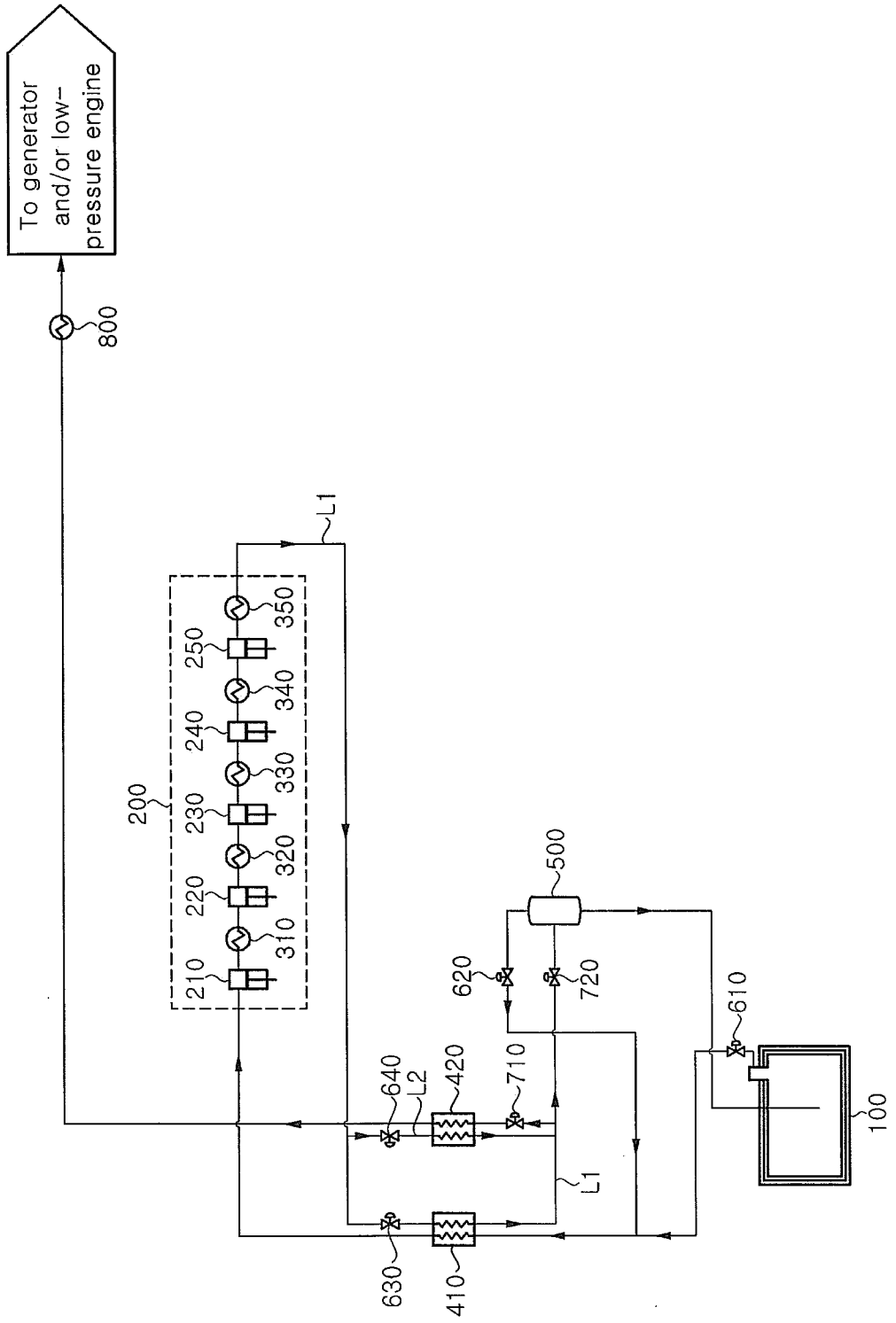
To generator and/or low-pressure engine
800
L1
200
210
220
230
240
250
310
320
330
340
350
500
620
720
610
640
L2
420
710
630
410
100

【FIG. 7】

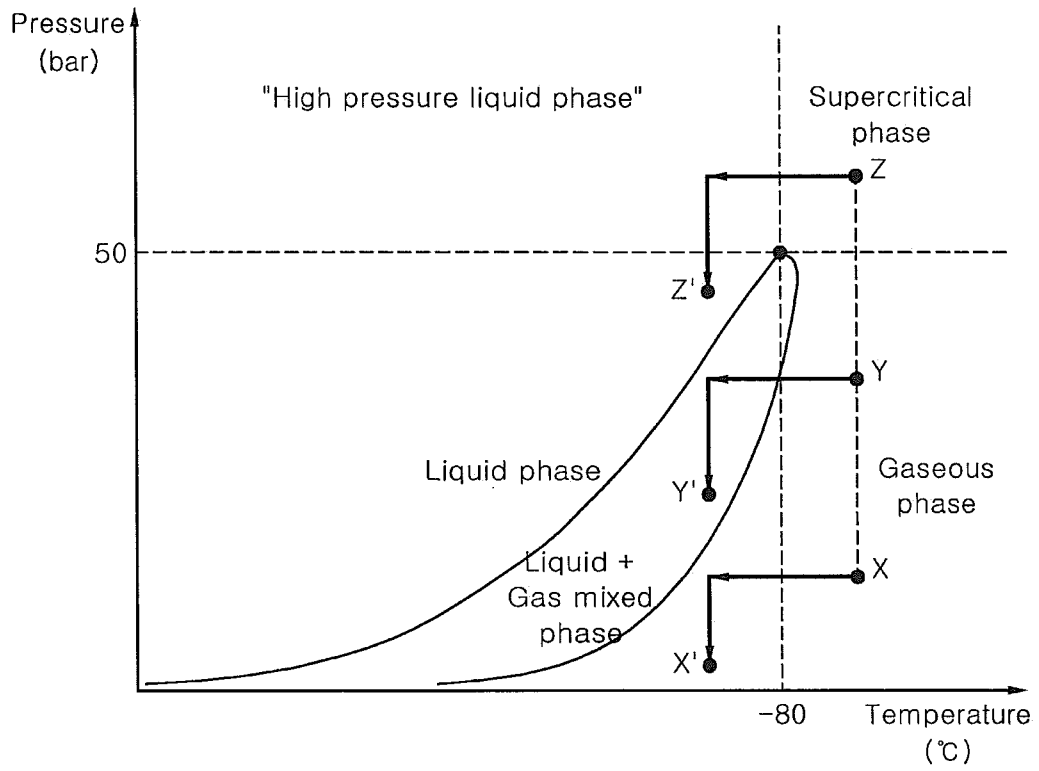
Pressure
(bar)
"High pressure liquid phase"
Supercritical
phase
Z
50
Z'
Y
Liquid phase
Y'
Gaseous
phase
Liquid +
Gas mixed
phase
X
X'
-80
Temperature
(℃)