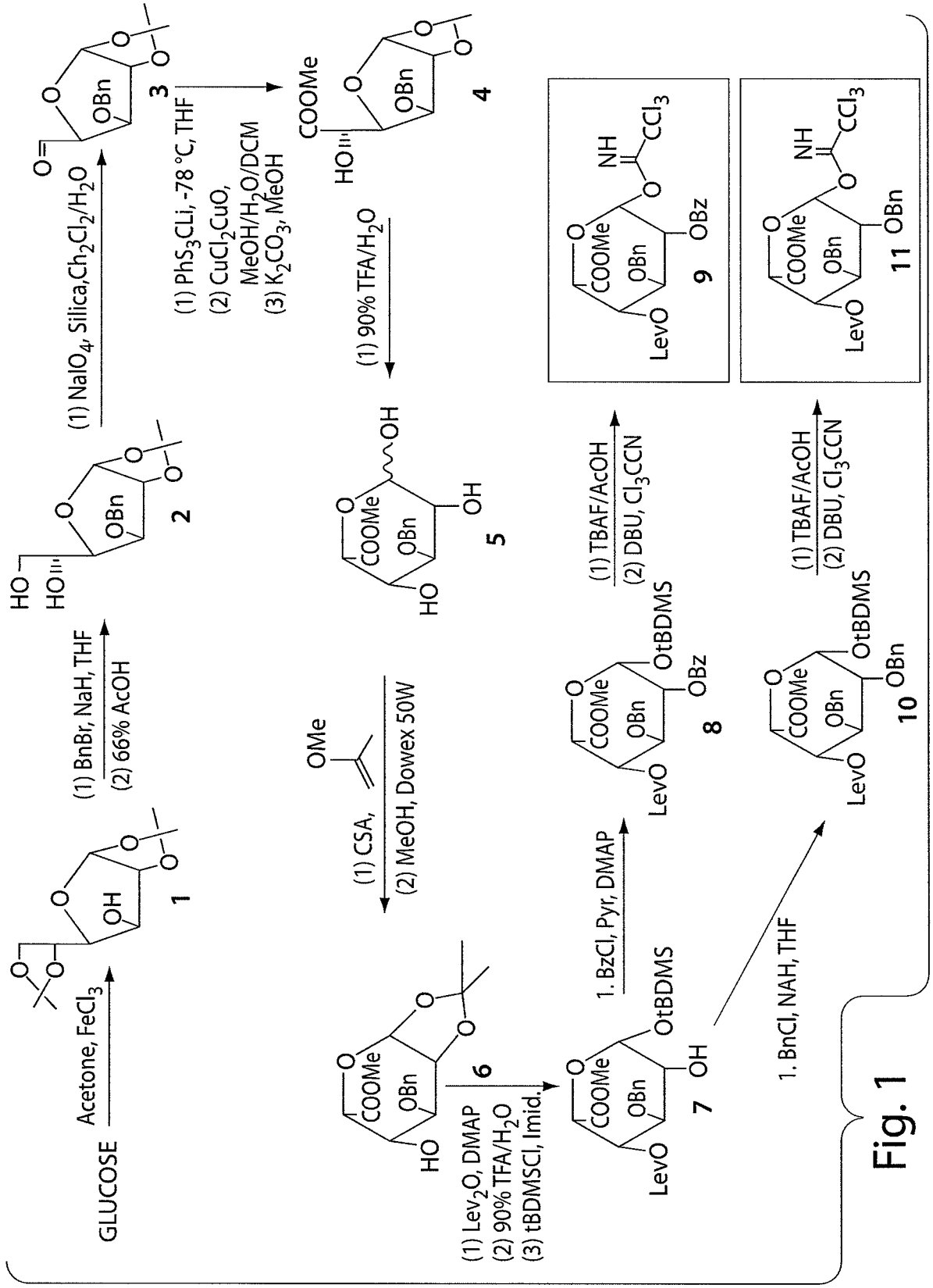
GLUCOSE
Acetone, FeCl3
1
(1) BnBr, NaH, THF
(2) 66% AcOH
2
(1) NaIO4, Silica, Ch2Cl2/H2O
3
(1) PhS3CLi, -78 °C, THF
(2) CuCl2CuO, MeOH/H2O/DCM
(3) K2CO3, MeOH
4
(1) 90% TFA/H2O
5
(1) CSA,
(2) MeOH, Dowex 50W
OMe
(1) Lev2O, DMAP
(2) 90% TFA/H2O
(3) tBDMSCl, Imid.
6
1. BzCl, Pyr, DMAP
7
8
(1) TBAF/AcOH
(2) DBU, Cl3CCN
9
1. BnCl, NAH, THF
10
(1) TBAF/AcOH
(2) DBU, Cl3CCN
11

Fig. 1

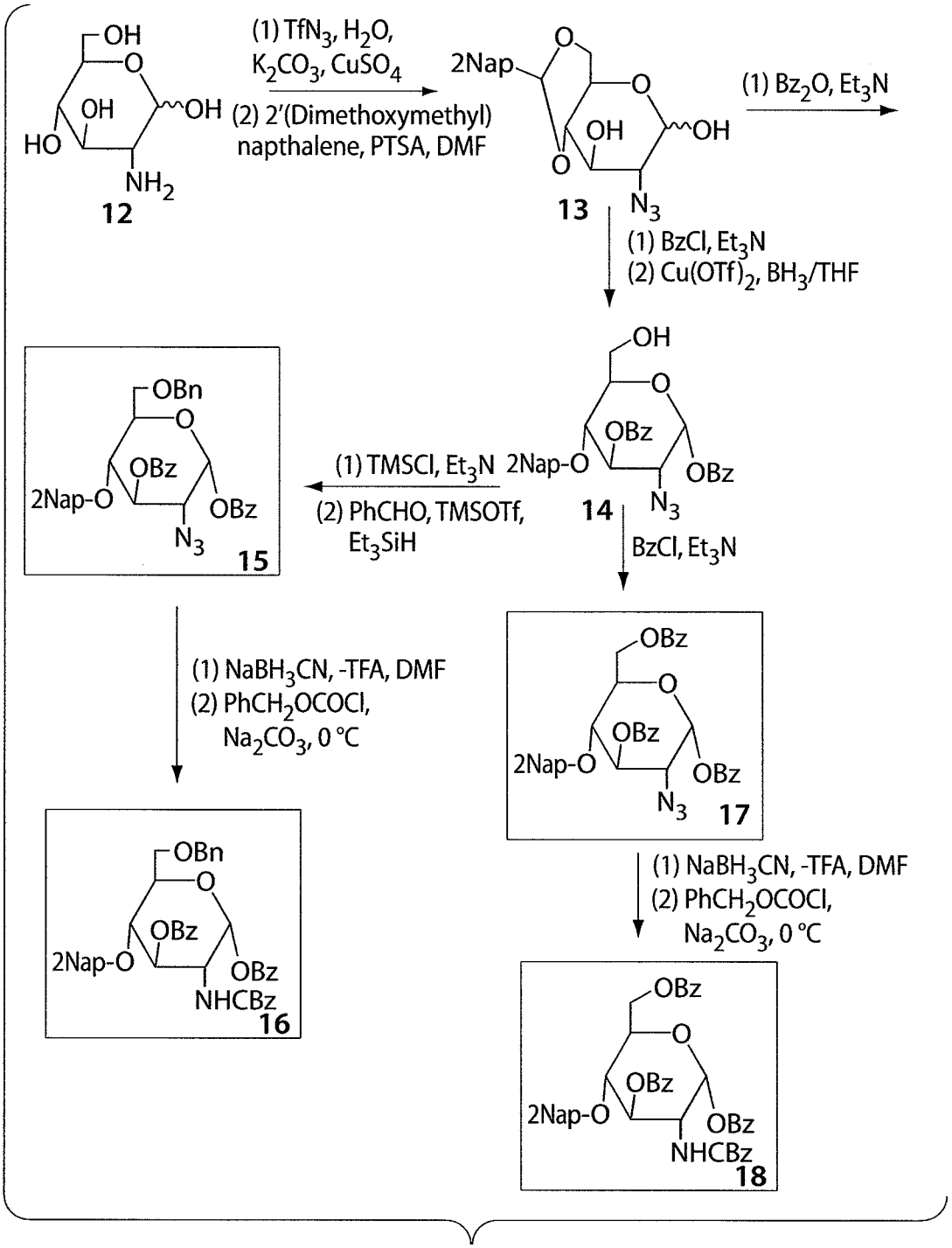
(1) TfN_3, H_2O,
K_2CO_3, $CuSO_4$
(2) 2'(Dimethoxymethyl)
napthalene, PTSA, DMF
12
13
(1) Bz_2O, Et_3N
(1) BzCl, Et_3N
(2) $Cu(OTf)_2$, BH_3/THF
14
(1) TMSCl, Et_3N
(2) PhCHO, TMSOTf,
Et_3SiH
15
BzCl, Et_3N
(1) $NaBH_3CN$, -TFA, DMF
(2) $PhCH_2OCOCl$,
Na_2CO_3, 0 °C
16
17
(1) $NaBH_3CN$, -TFA, DMF
(2) $PhCH_2OCOCl$,
Na_2CO_3, 0 °C
18

Fig. 2

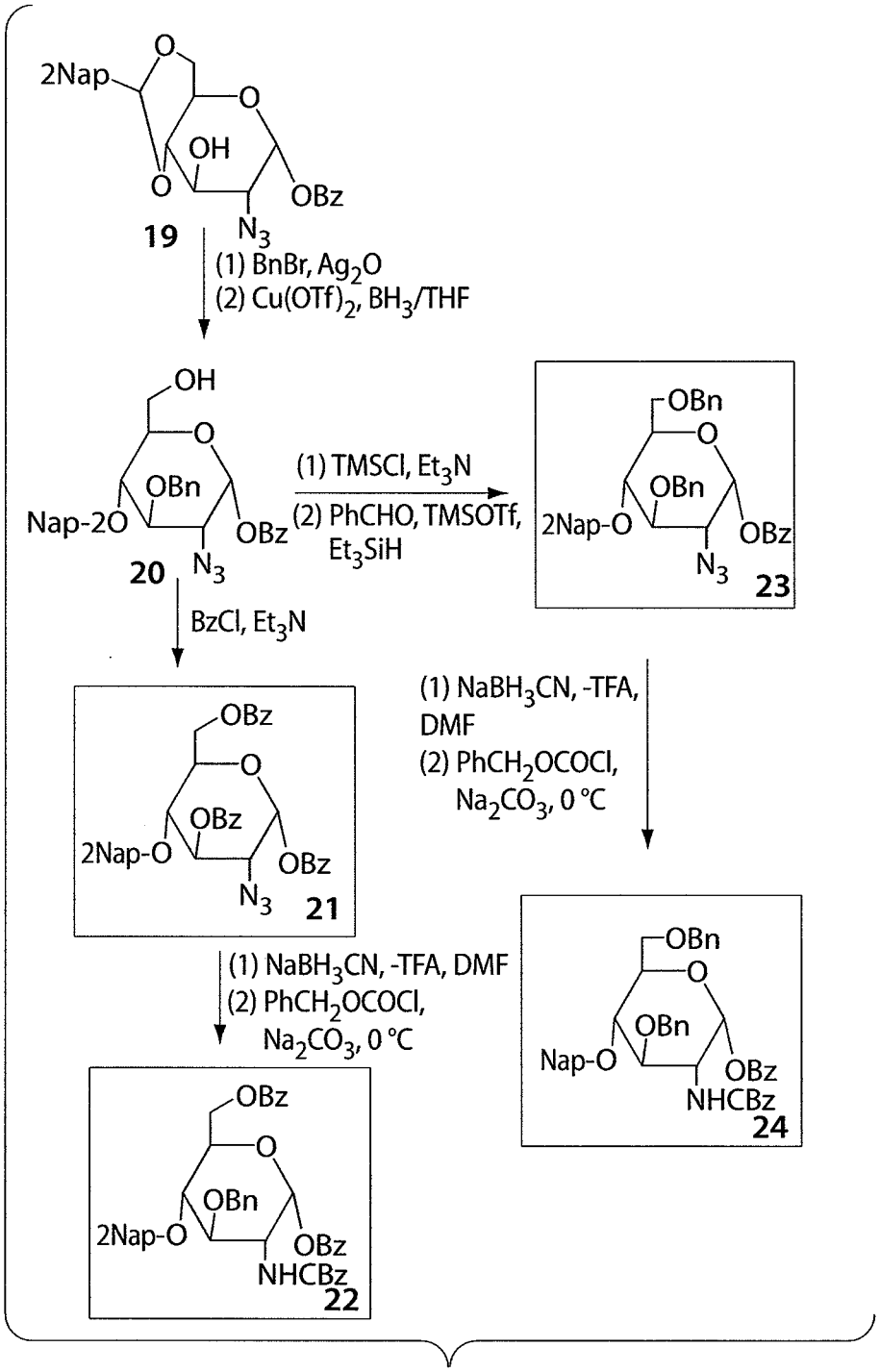

Fig. 2
(continued)

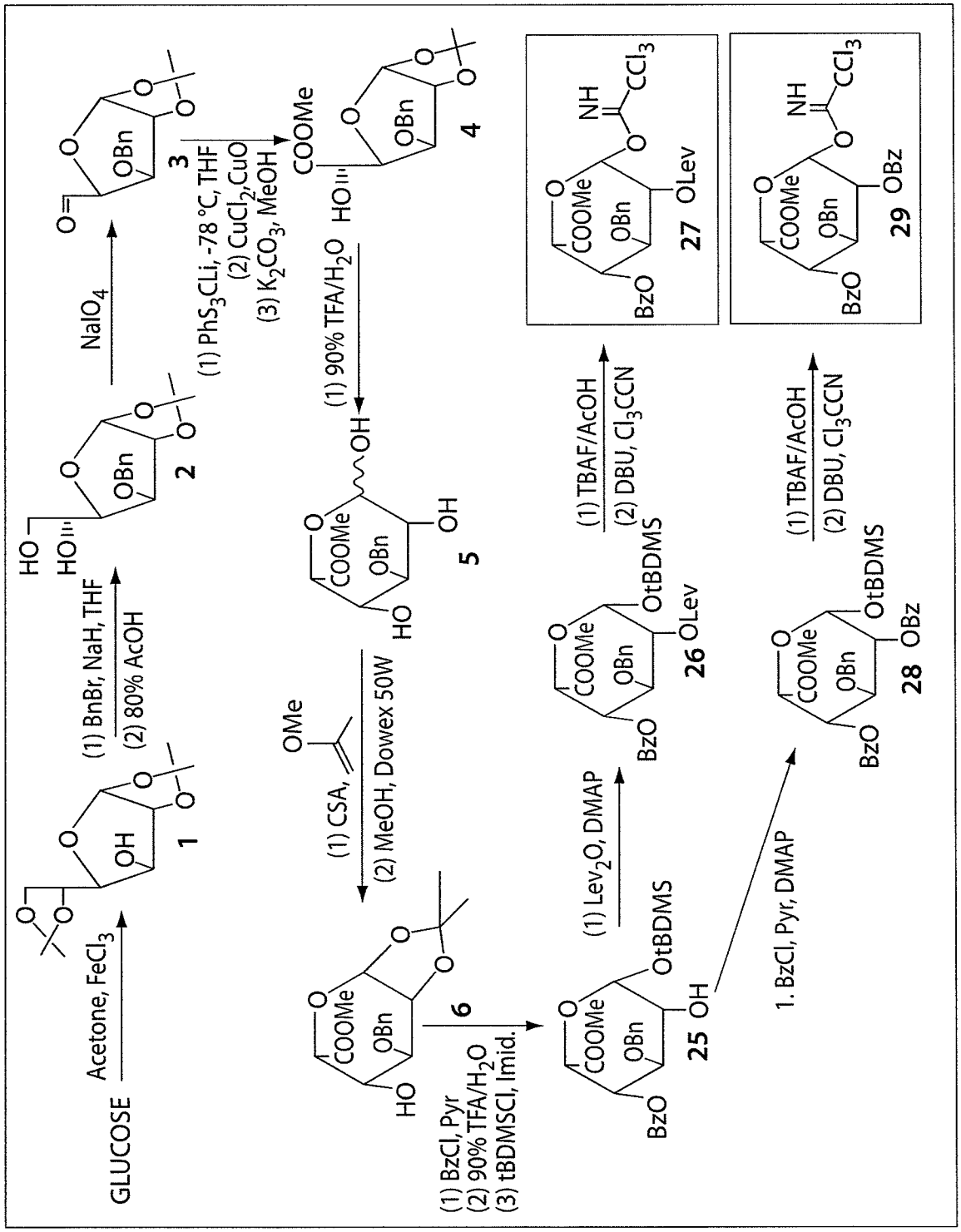
GLUCOSE
Acetone, FeCl3
1
(1) BnBr, NaH, THF
(2) 80% AcOH
2
NaIO4
3
(1) PhS3CLi, -78 °C, THF
(2) CuCl2,CuO
(3) K2CO3, MeOH
4
(1) 90% TFA/H2O
5
(1) CSA,
(2) MeOH, Dowex 50W
6
(1) BzCl, Pyr
(2) 90% TFA/H2O
(3) tBDMSCl, Imid.
25
(1) Lev2O, DMAP
26
(1) TBAF/AcOH
(2) DBU, Cl3CCN
27
1. BzCl, Pyr, DMAP
28
(1) TBAF/AcOH
(2) DBU, Cl3CCN
29

Fig. 3

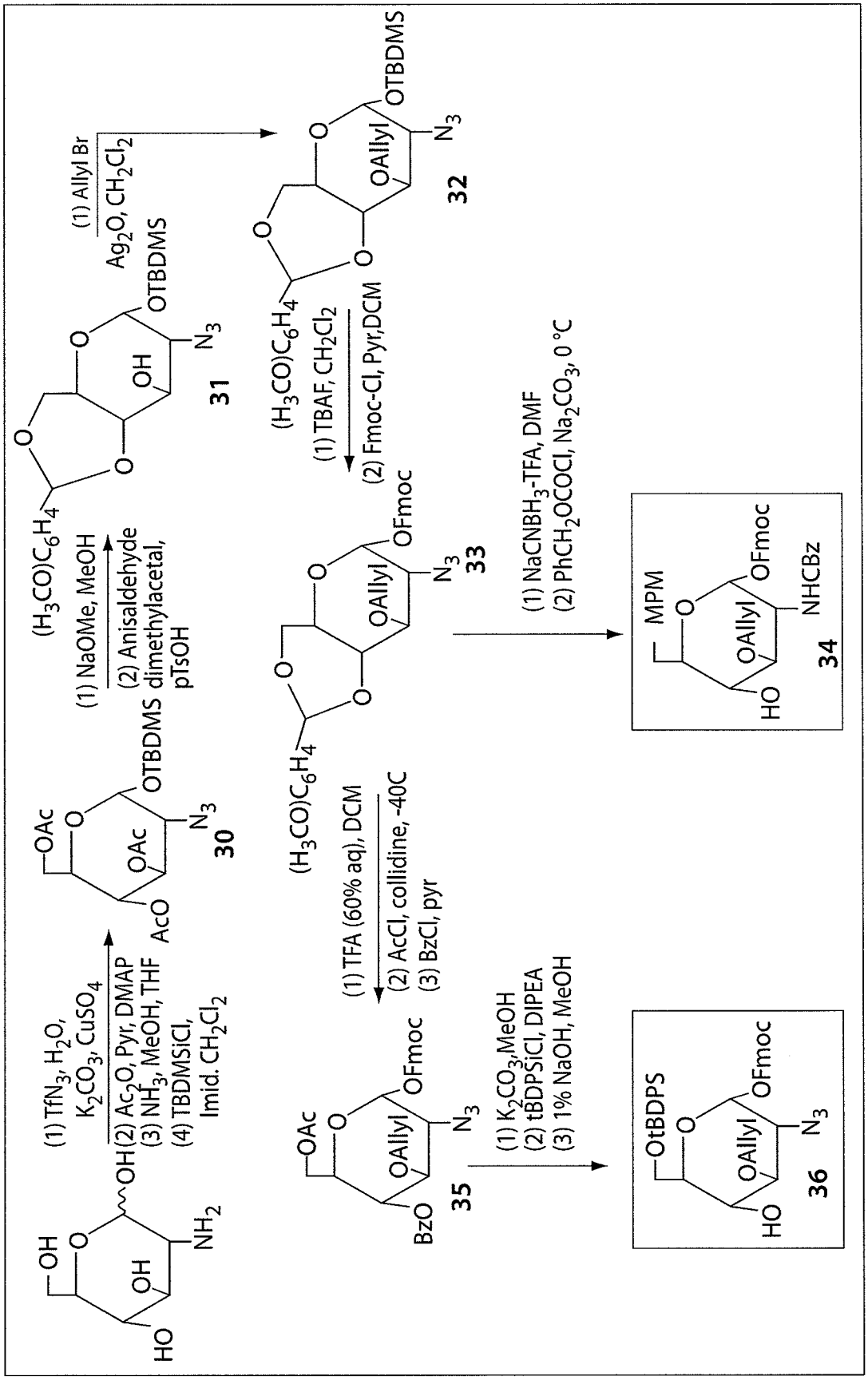
(1) TfN_3, H_2O, K_2CO_3, $CuSO_4$
(2) Ac_2O, Pyr, DMAP
(3) NH_3, MeOH, THF
(4) TBDMSiCl, Imid. CH_2Cl_2
(1) NaOMe, MeOH
(2) Anisaldehyde dimethylacetal, pTsOH
(1) Allyl Br Ag_2O, CH_2Cl_2
(1) TBAF, CH_2Cl_2
(2) Fmoc-Cl, Pyr,DCM
(1) TFA (60% aq), DCM
(2) AcCl, collidine, -40C
(3) BzCl, pyr
(1) $NaCNBH_3$-TFA, DMF
(2) $PhCH_2OCOCl$, Na_2CO_3, 0 °C
(1) K_2CO_3,MeOH
(2) tBDPSiCl, DIPEA
(3) 1% NaOH, MeOH
30
31
32
33
34
35
36

Fig. 4

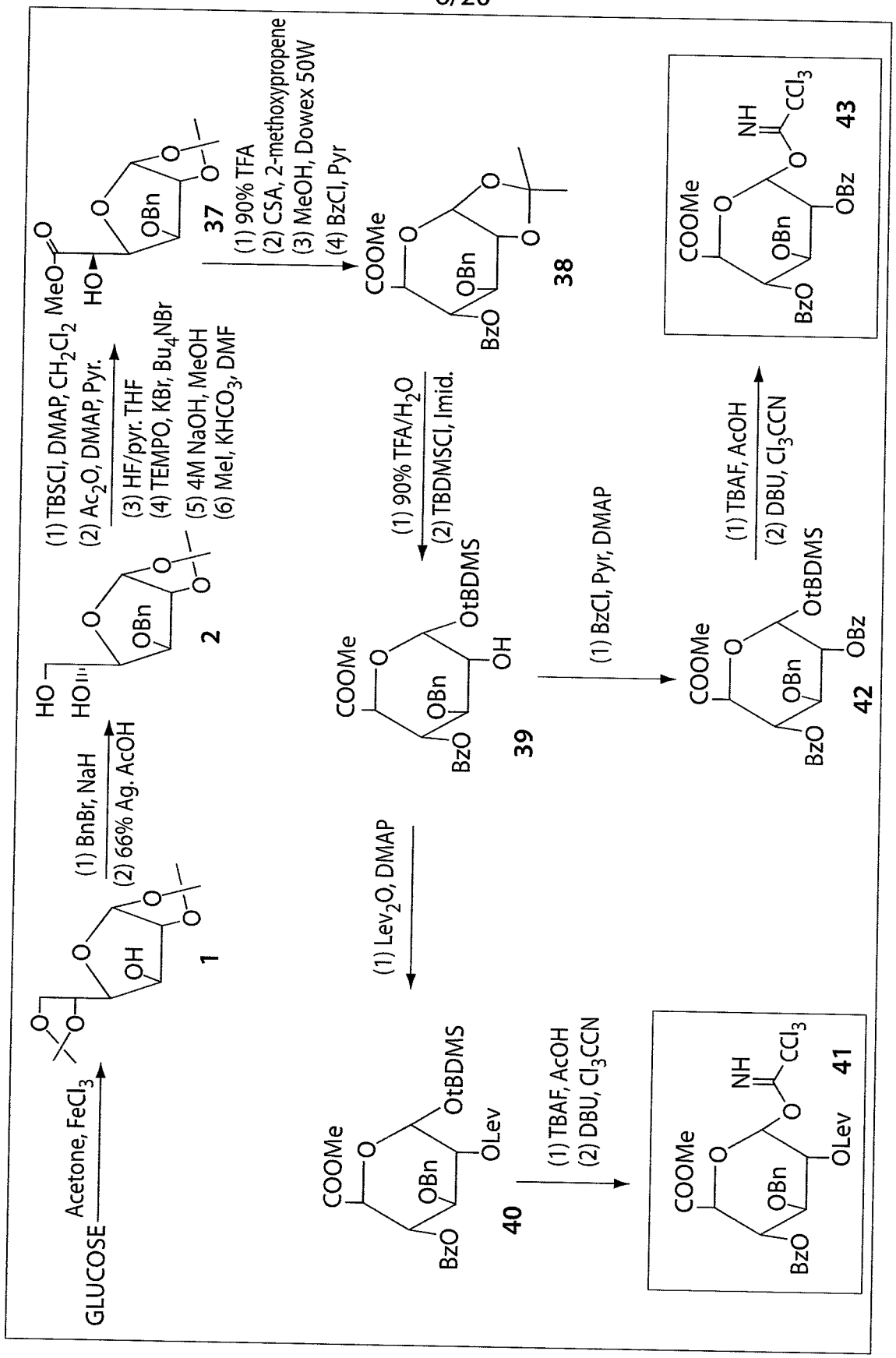
GLUCOSE
Acetone, FeCl3
1
(1) BnBr, NaH
(2) 66% Ag, AcOH
2
(1) TBSCl, DMAP, CH2Cl2
(2) Ac2O, DMAP, Pyr.
(3) HF/pyr. THF
(4) TEMPO, KBr, Bu4NBr
(5) 4M NaOH, MeOH
(6) MeI, KHCO3, DMF
37
(1) 90% TFA
(2) CSA, 2-methoxypropene
(3) MeOH, Dowex 50W
(4) BzCl, Pyr
38
(1) 90% TFA/H2O
(2) TBDMSCl, Imid.
39
(1) Lev2O, DMAP
40
(1) TBAF, AcOH
(2) DBU, Cl3CCN
41
(1) BzCl, Pyr, DMAP
42
(1) TBAF, AcOH
(2) DBU, Cl3CCN
43

Fig. 5

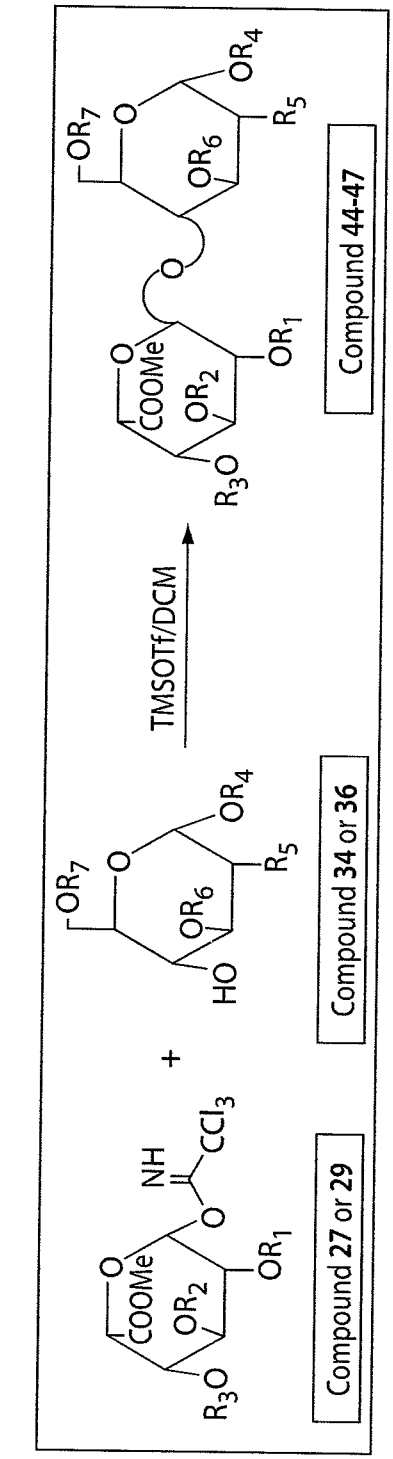

Compd	U + H	R1	R2	R3	R4	R5	R6	R7
44	27 + 36	Lev	Bn	Bz	Fmoc	N_3	All	tBDPS
45	27 + 34	Lev	Bn	Bz	Fmoc	NHCbz	All	MPM
46	29 + 36	Bz	Bn	Bz	Fmoc	N_3	All	tBDPS
47	29 + 34	Bz	Bn	Bz	Fmoc	NHCbz	All	MPM

Fig. 6

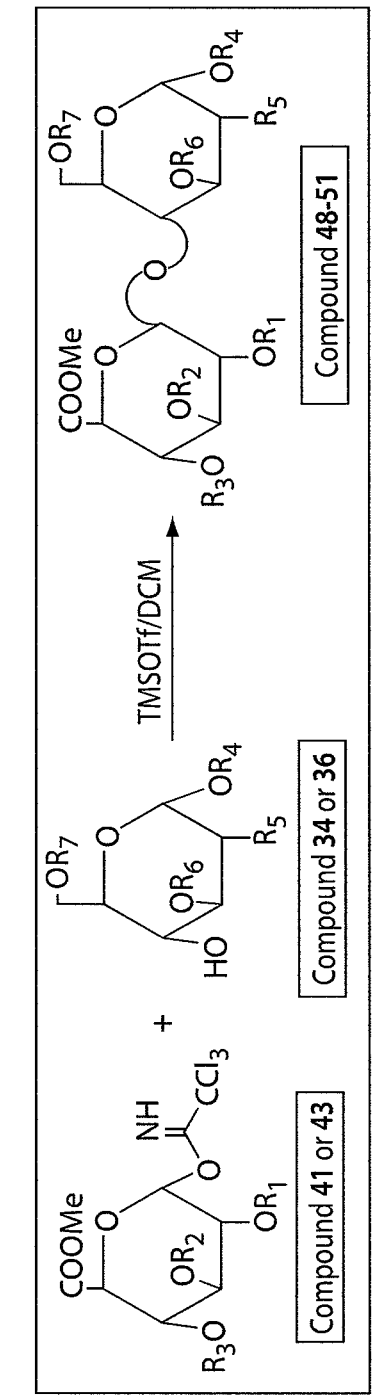

Compd	U + H	R1	R2	R3	R4	R5	R6	R7
48	41 - 36	Lev	Bn	Bz	Fmoc	N_3	All	tBDPS
49	41 + 34	Lev	Bn	Bz	Fmoc	NHCbz	All	MPM
50	43 + 36	Bz	Bn	Bz	Fmoc	N_3	All	tBDPS
51	43 + 34	Bz	Bn	Bz	Fmoc	NHCbz	All	MPM

Fig. 7

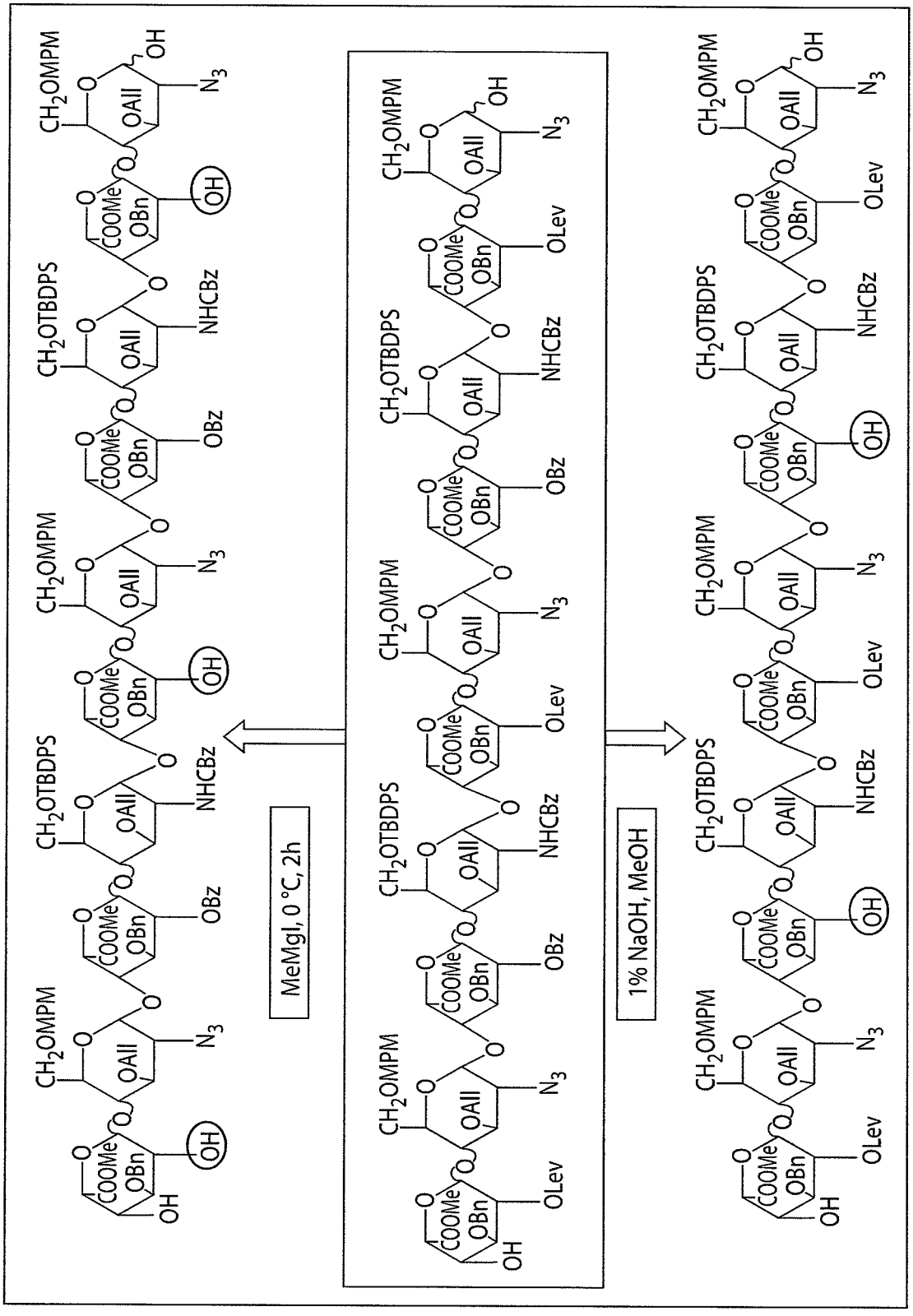

Fig. 8

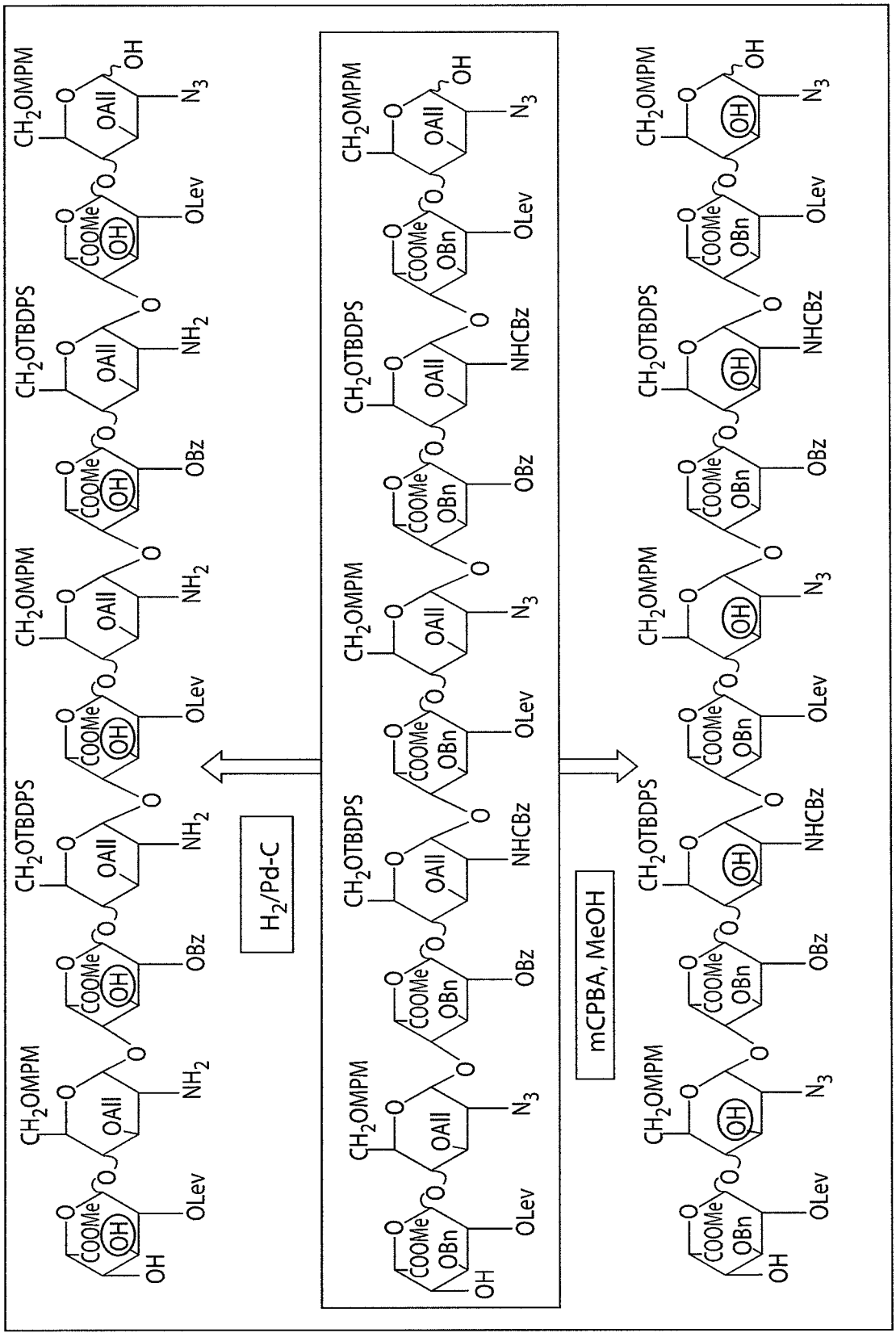
H2/Pd-C
mCPBA, MeOH
CH2OMPM
CH2OTBDPS
OAll
OLev
OBz
OBn
NHCBz
COOMe
OH
N3
NH2

Fig. 9

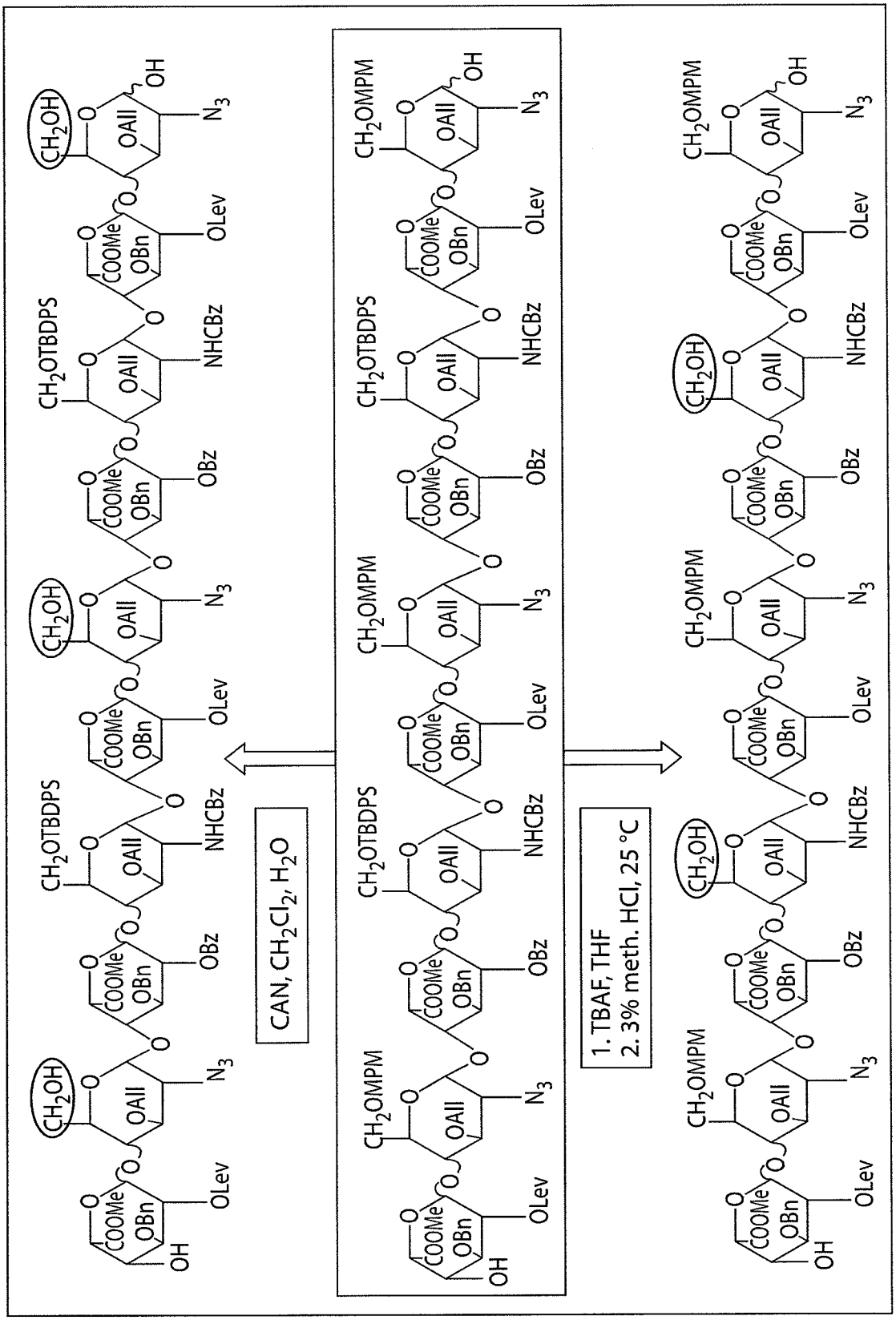

Fig. 10

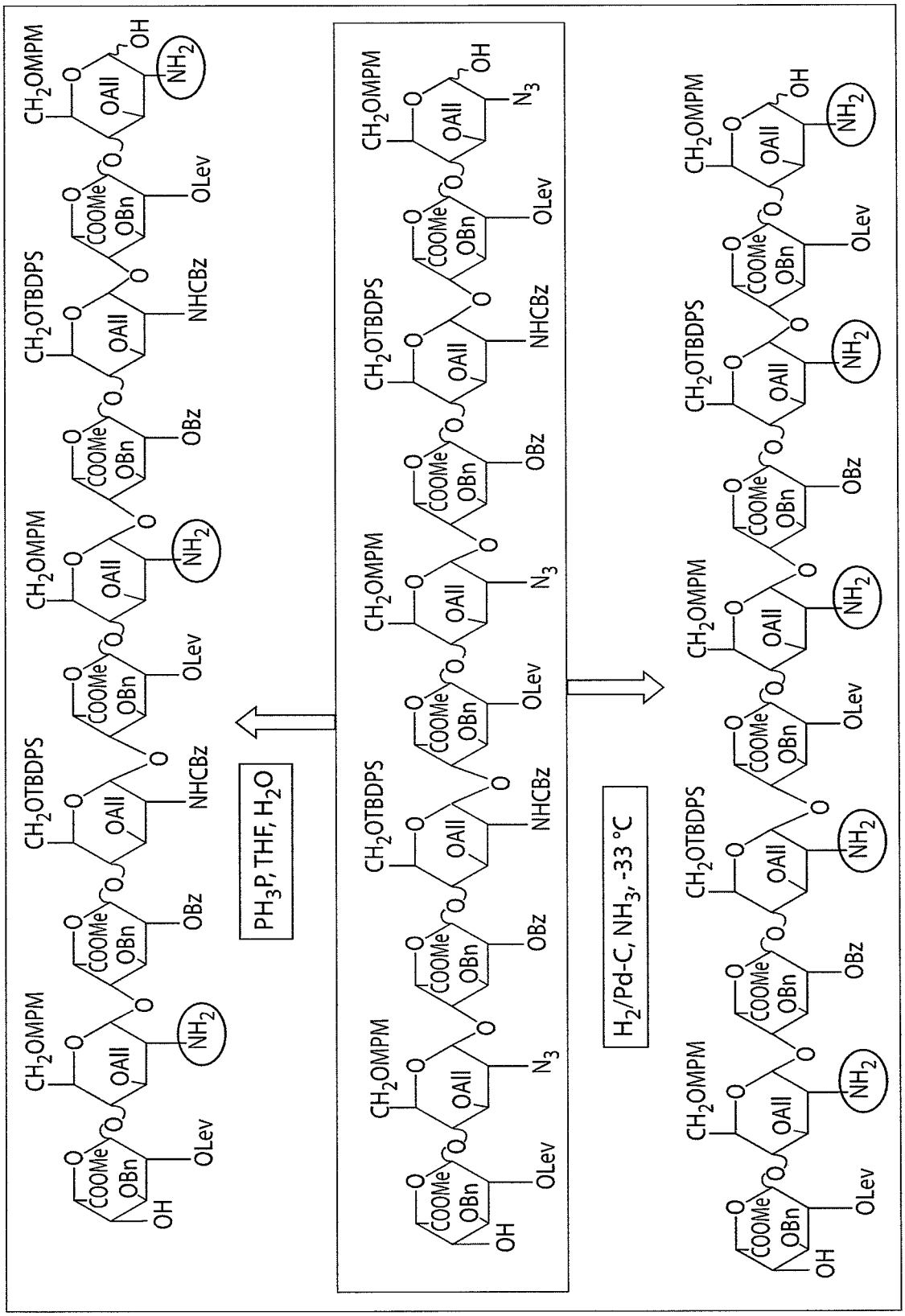
PH3P, THF, H2O
H2/Pd-C, NH3, -33 °C
CH2OMPM
CH2OTBDPS
OAll
NHCBz
COOMe
OBn
OBz
OLev
NH2
N3
OH

Fig. 11

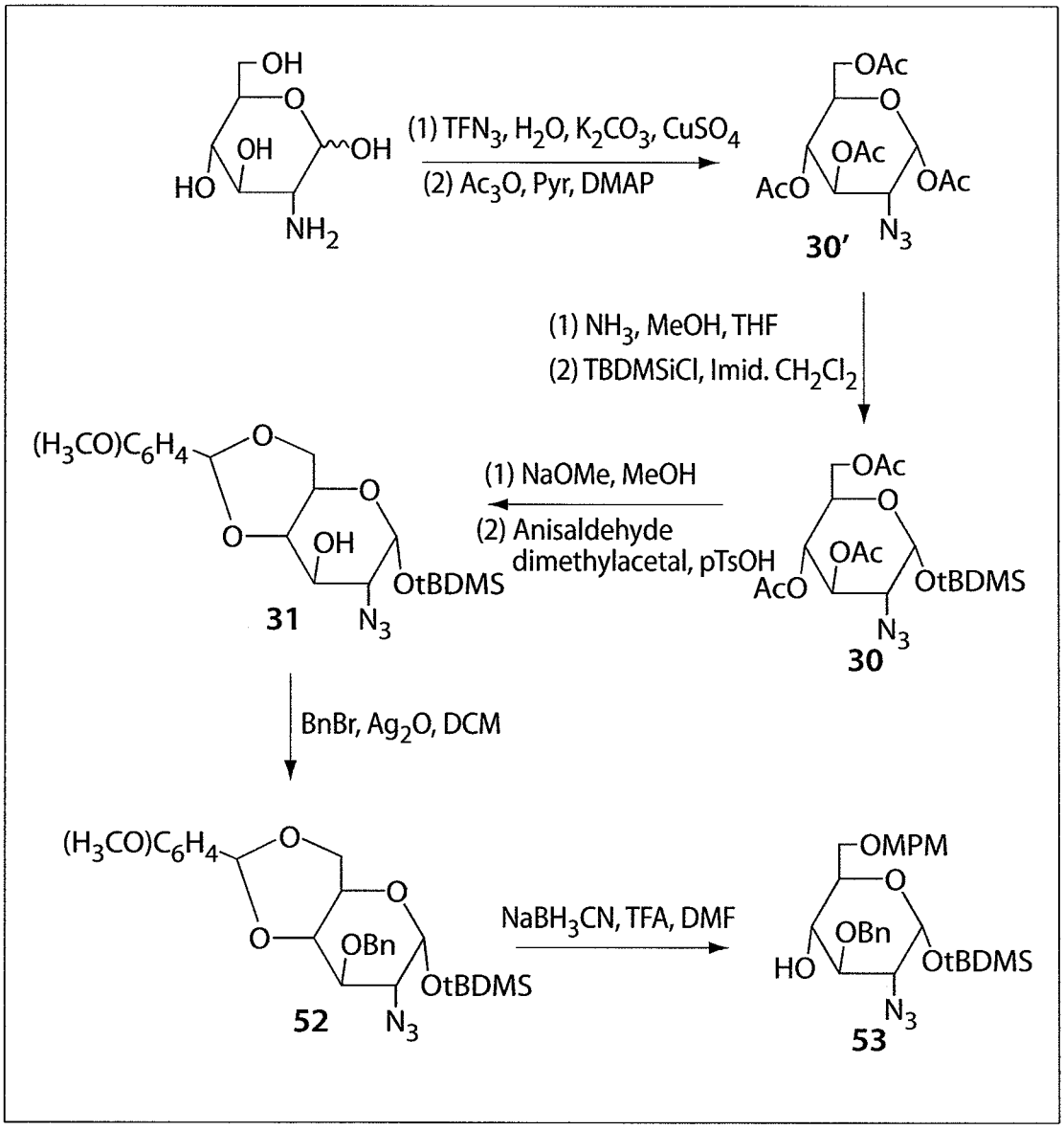
OH
O
OH
OH
HO
NH2
(1) TFN3, H2O, K2CO3, CuSO4
(2) Ac3O, Pyr, DMAP
OAc
O
OAc
AcO
OAc
N3
30'
(1) NH3, MeOH, THF
(2) TBDMSiCl, Imid. CH2Cl2
(H3CO)C6H4
O
O
O
OH
OtBDMS
N3
31
(1) NaOMe, MeOH
(2) Anisaldehyde
dimethylacetal, pTsOH
OAc
O
OAc
AcO
OtBDMS
N3
30
BnBr, Ag2O, DCM
(H3CO)C6H4
O
O
O
OBn
OtBDMS
N3
52
NaBH3CN, TFA, DMF
OMPM
O
OBn
HO
OtBDMS
N3
53

Fig. 12

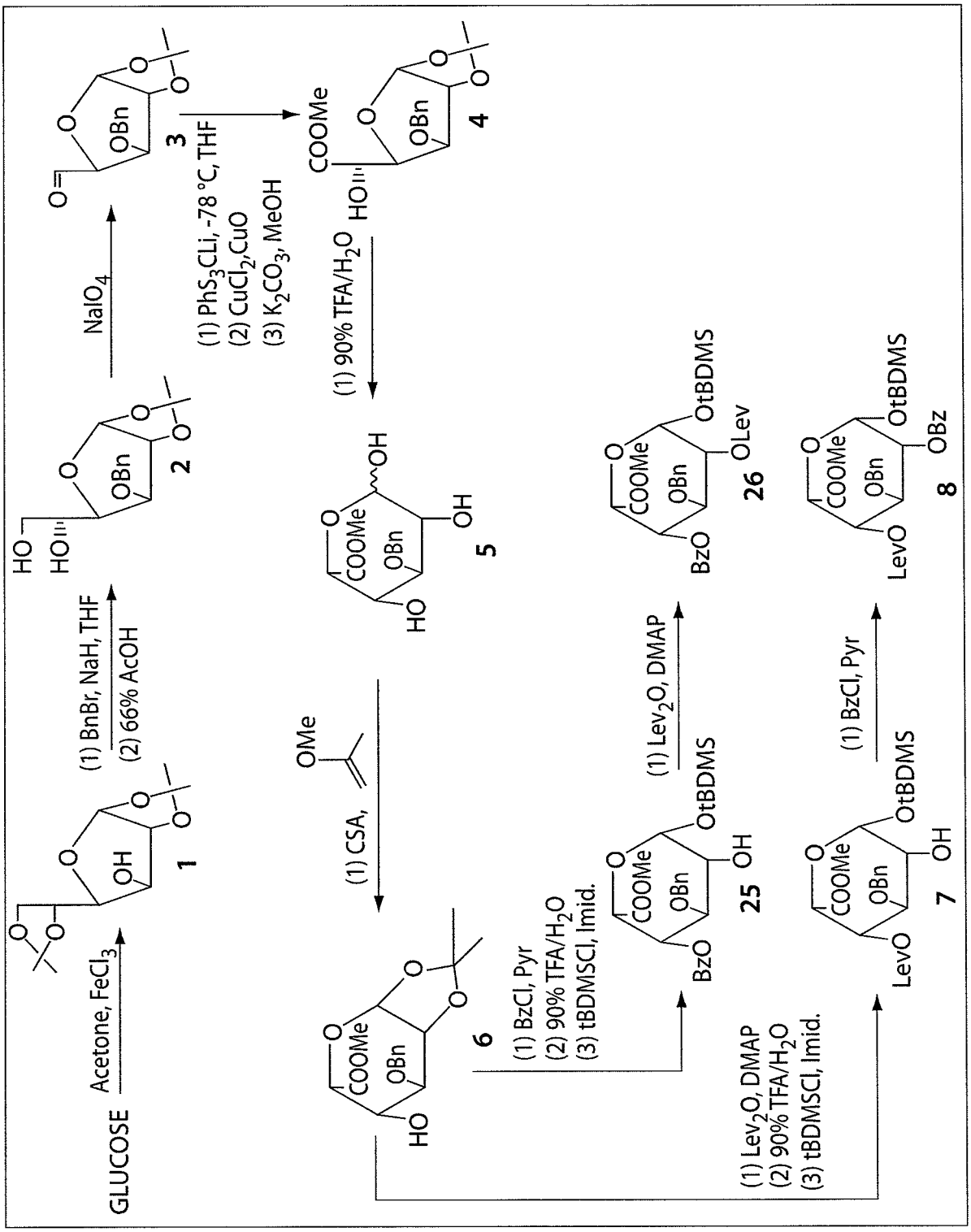
GLUCOSE
Acetone, FeCl3
1
(1) BnBr, NaH, THF
(2) 66% AcOH
2
NaIO4
3
(1) PhS3CLi, -78 °C, THF
(2) CuCl2,CuO
(3) K2CO3, MeOH
4
(1) 90% TFA/H2O
5
(1) CSA,
6
(1) BzCl, Pyr
(2) 90% TFA/H2O
(3) tBDMSCl, Imid.
25
(1) Lev2O, DMAP
26
(1) Lev2O, DMAP
(2) 90% TFA/H2O
(3) tBDMSCl, Imid.
7
(1) BzCl, Pyr
8

Fig. 13

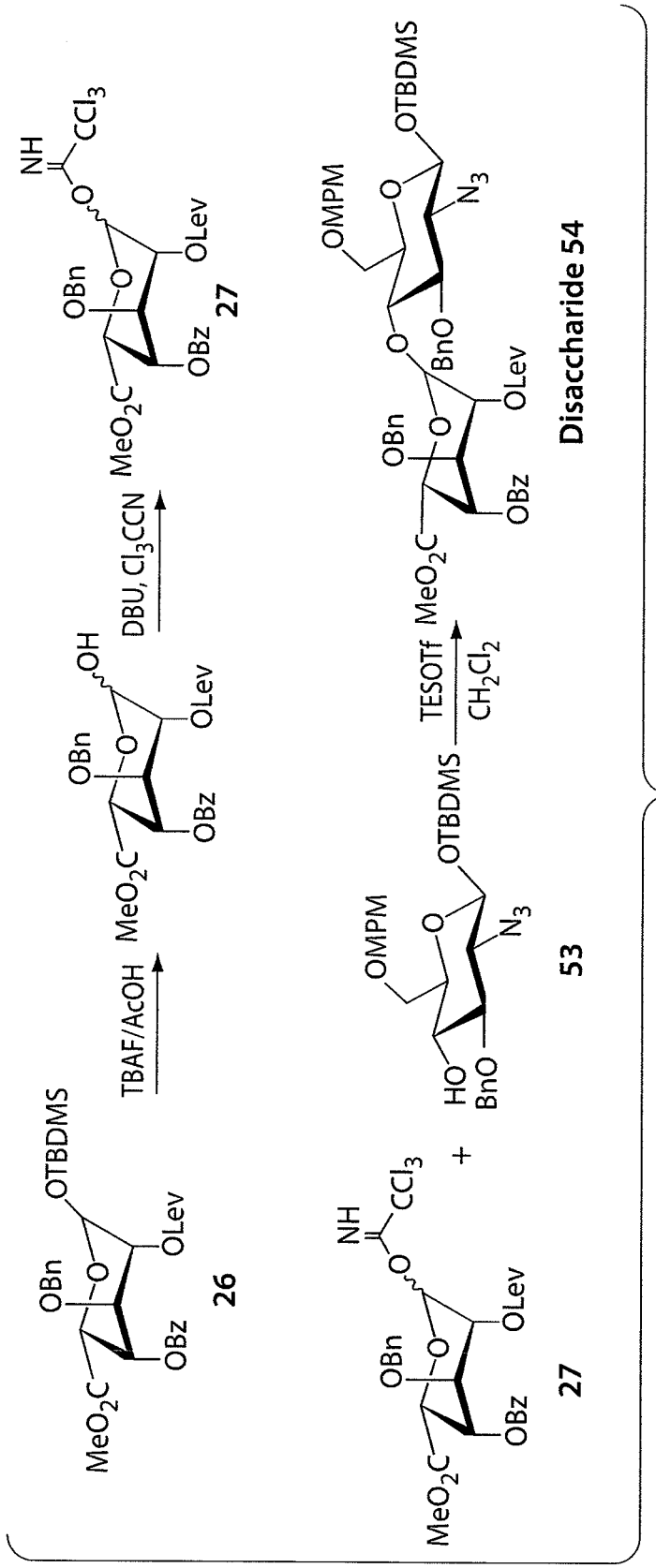
TBAF/AcOH
DBU, Cl3CCN
TESOTf
CH2Cl2
26
27
53
27
Disaccharide 54

Fig. 14

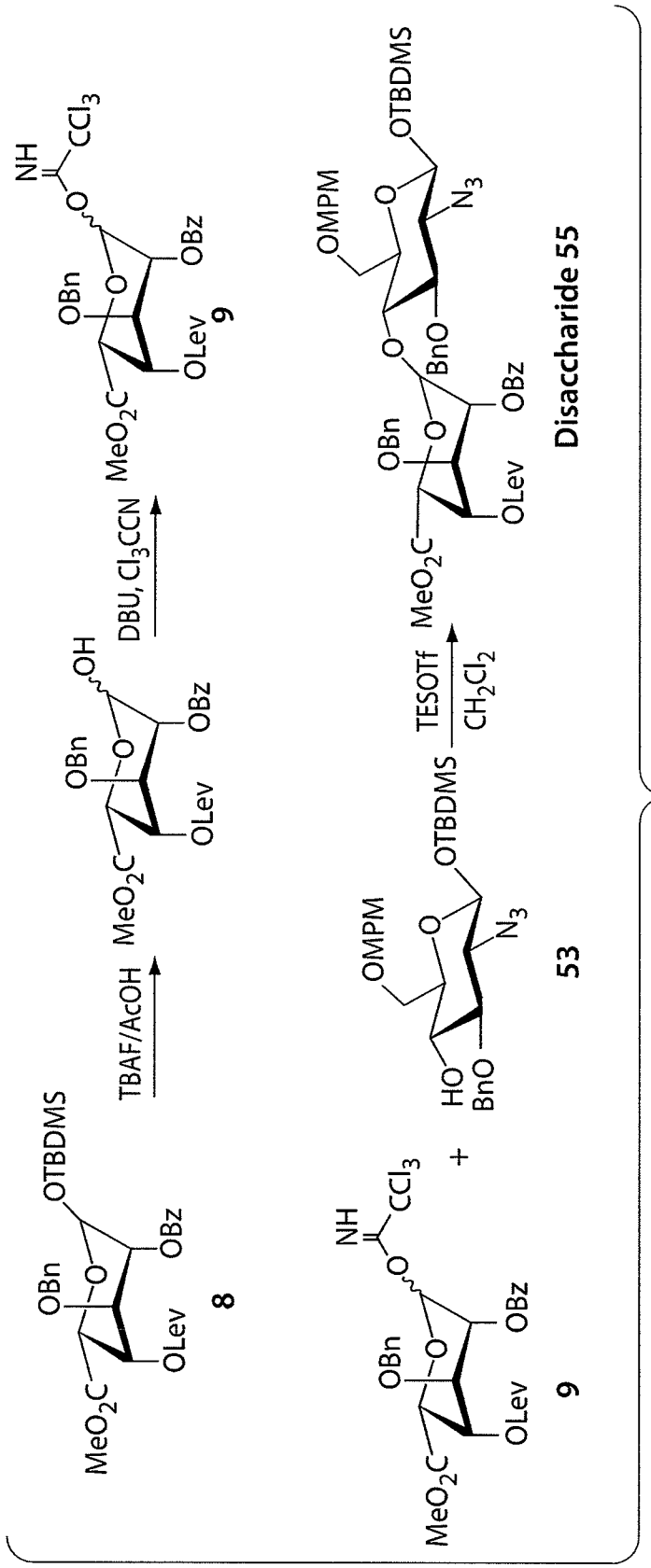

Fig. 15

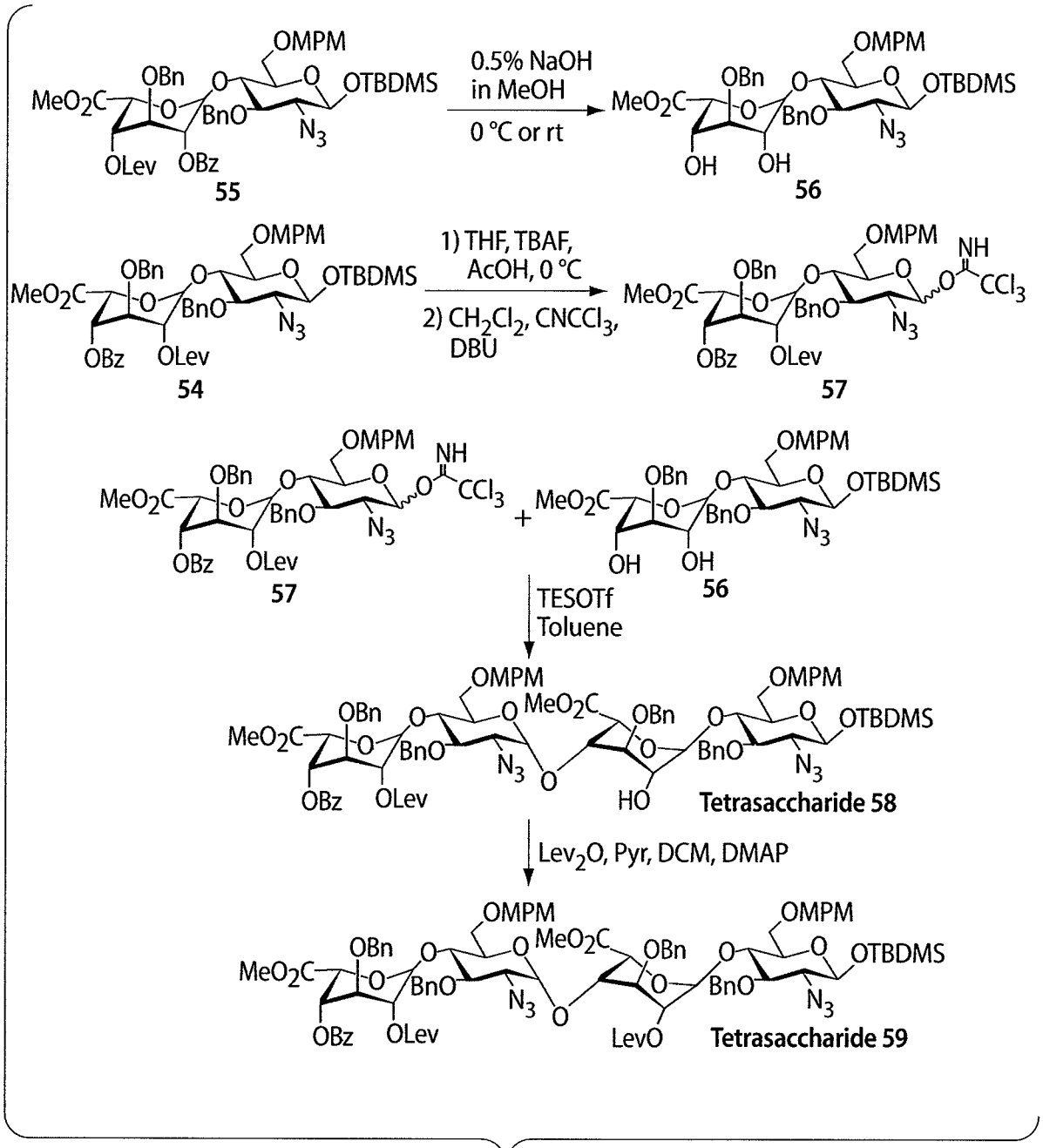
OMPM
OBn
MeO2C
BnO
OTBDMS
N3
OLev
OBz
55
0.5% NaOH
in MeOH
0 °C or rt
OH
56
1) THF, TBAF,
AcOH, 0 °C
2) CH2Cl2, CNCCl3,
DBU
NH
CCl3
54
57
TESOTf
Toluene
Tetrasaccharide 58
Lev2O, Pyr, DCM, DMAP
LevO
Tetrasaccharide 59

Fig. 16

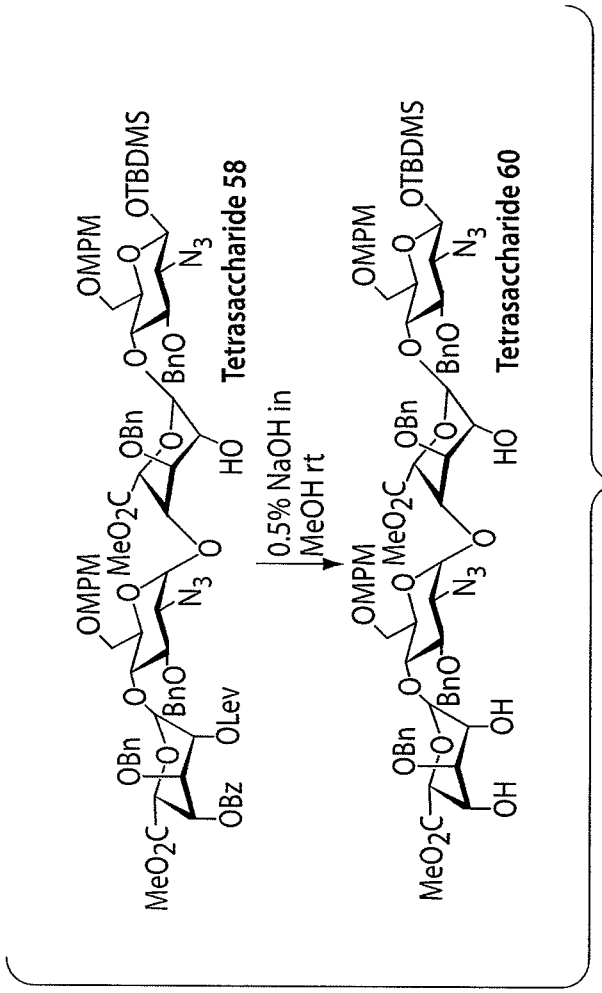
OMPM
OTBDMS
N3
BnO
O
Tetrasaccharide 58
OBn
MeO2C
HO
0.5% NaOH in
MeOH rt
OLev
OBz
OH
Tetrasaccharide 60

Fig. 17

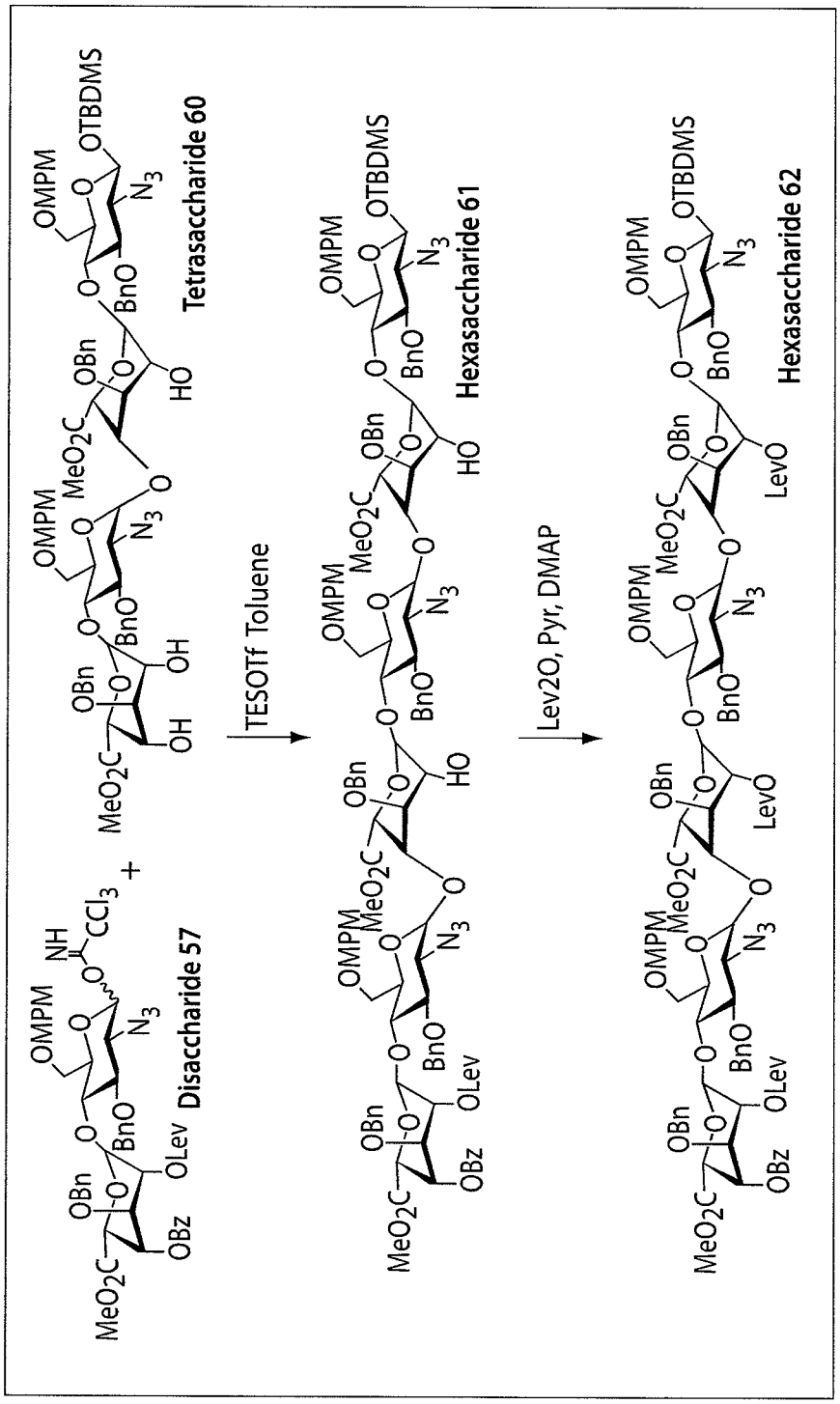

Fig. 17
(continued)

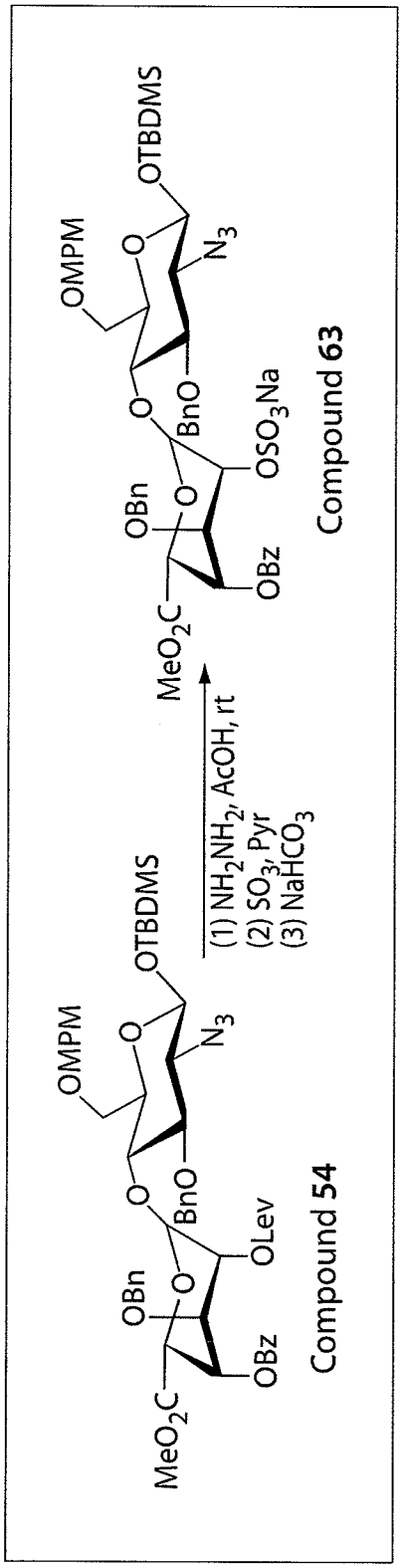
OMPM
OTBDMS
N3
BnO
OLev
OBn
OBz
MeO2C
Compound 54
(1) NH2NH2, AcOH, rt
(2) SO3, Pyr
(3) NaHCO3
OSO3Na
Compound 63

Fig. 18