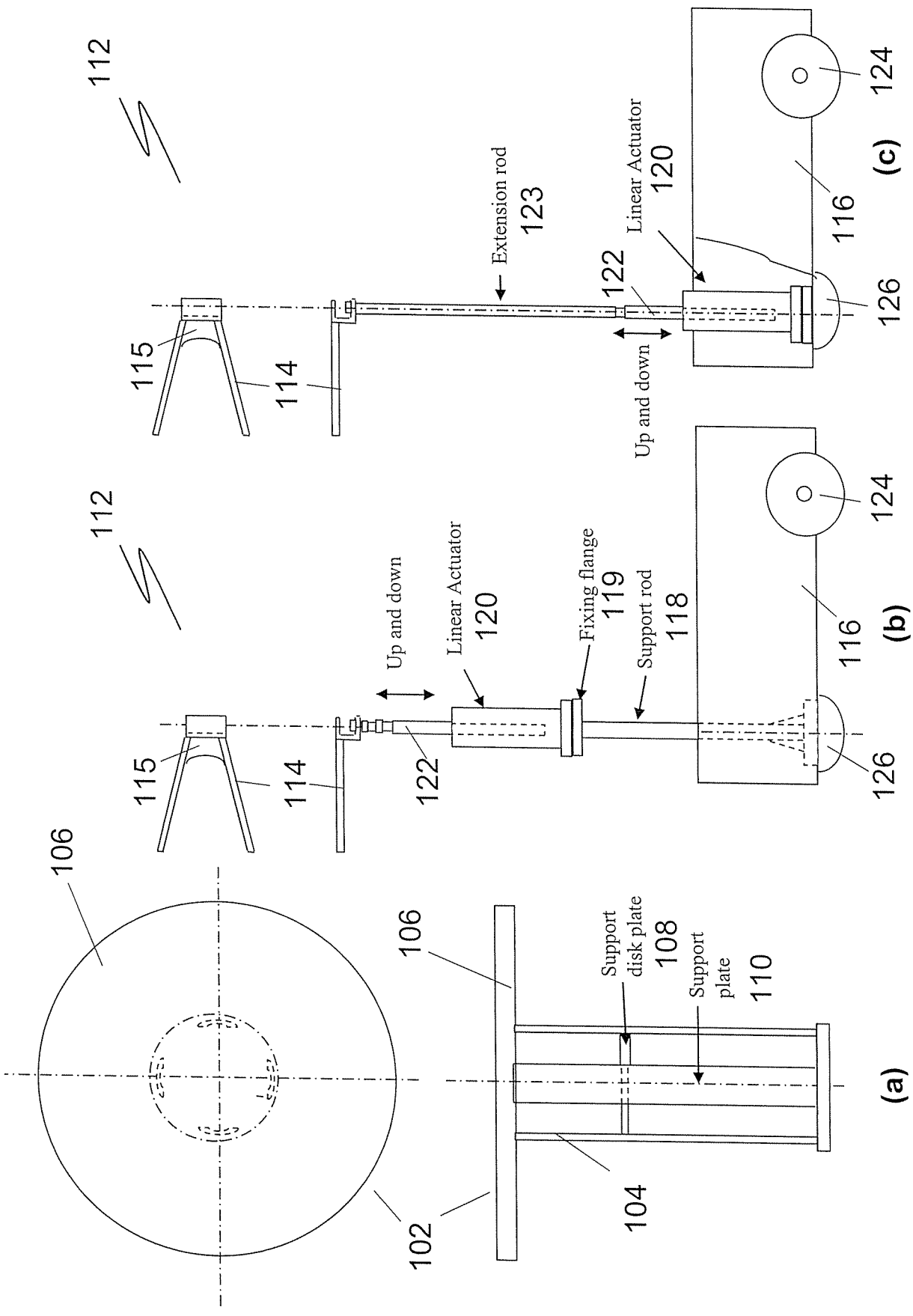
112
115
114
Extension rod
123
122
Linear Actuator
120
Up and down
116
124
126
(c)
112
115
114
Up and down
Linear Actuator
120
Fixing flange
119
Support rod
118
122
116
124
126
(b)
106
106
Support disk plate
108
Support plate
110
102
104
(a)

Fig. 1

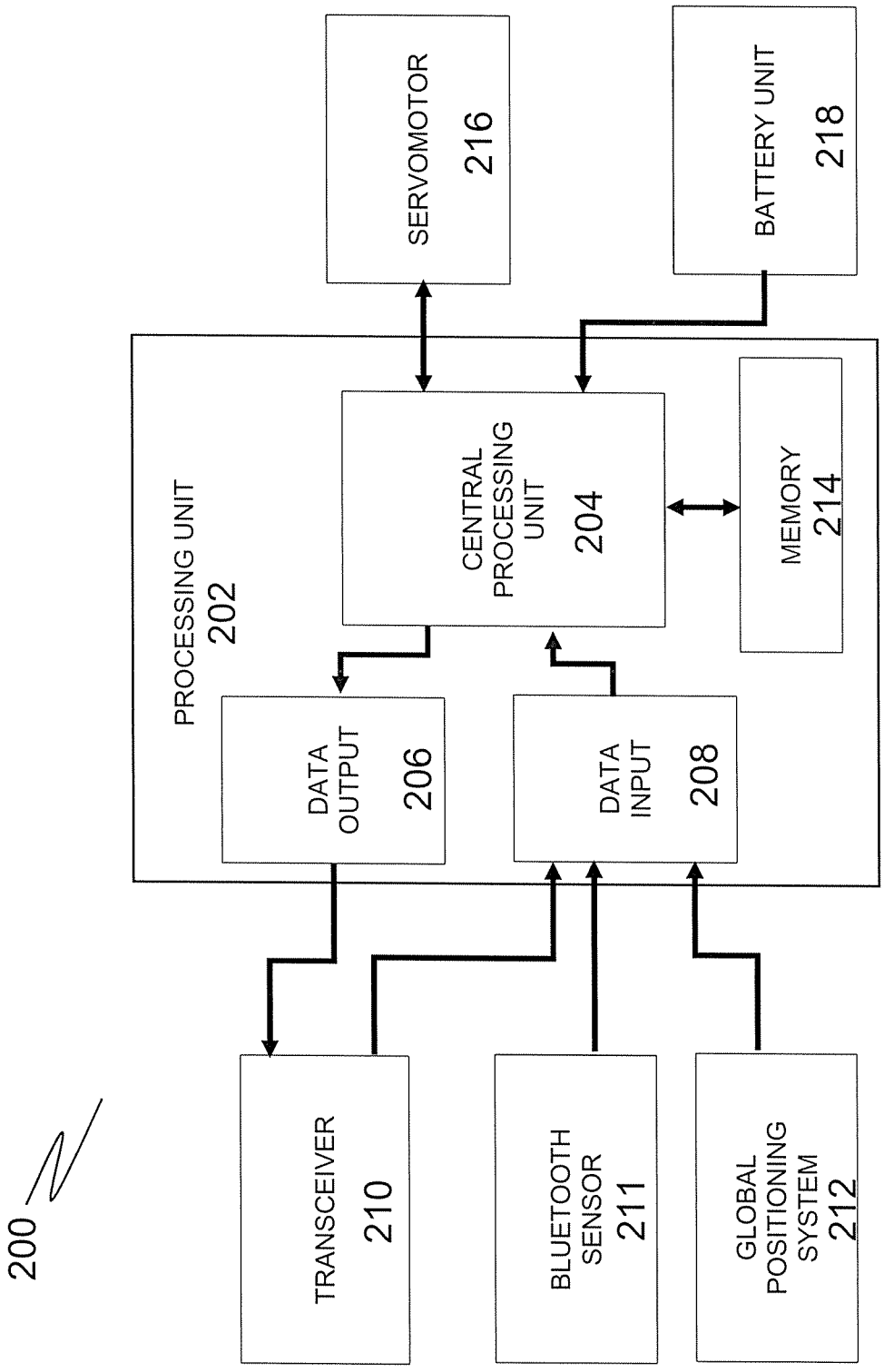
200
SERVOMOTOR
216
BATTERY UNIT
218
PROCESSING UNIT
202
CENTRAL PROCESSING UNIT
204
MEMORY
214
DATA OUTPUT
206
DATA INPUT
208
TRANSCEIVER
210
BLUETOOTH SENSOR
211
GLOBAL POSITIONING SYSTEM
212

Fig. 2

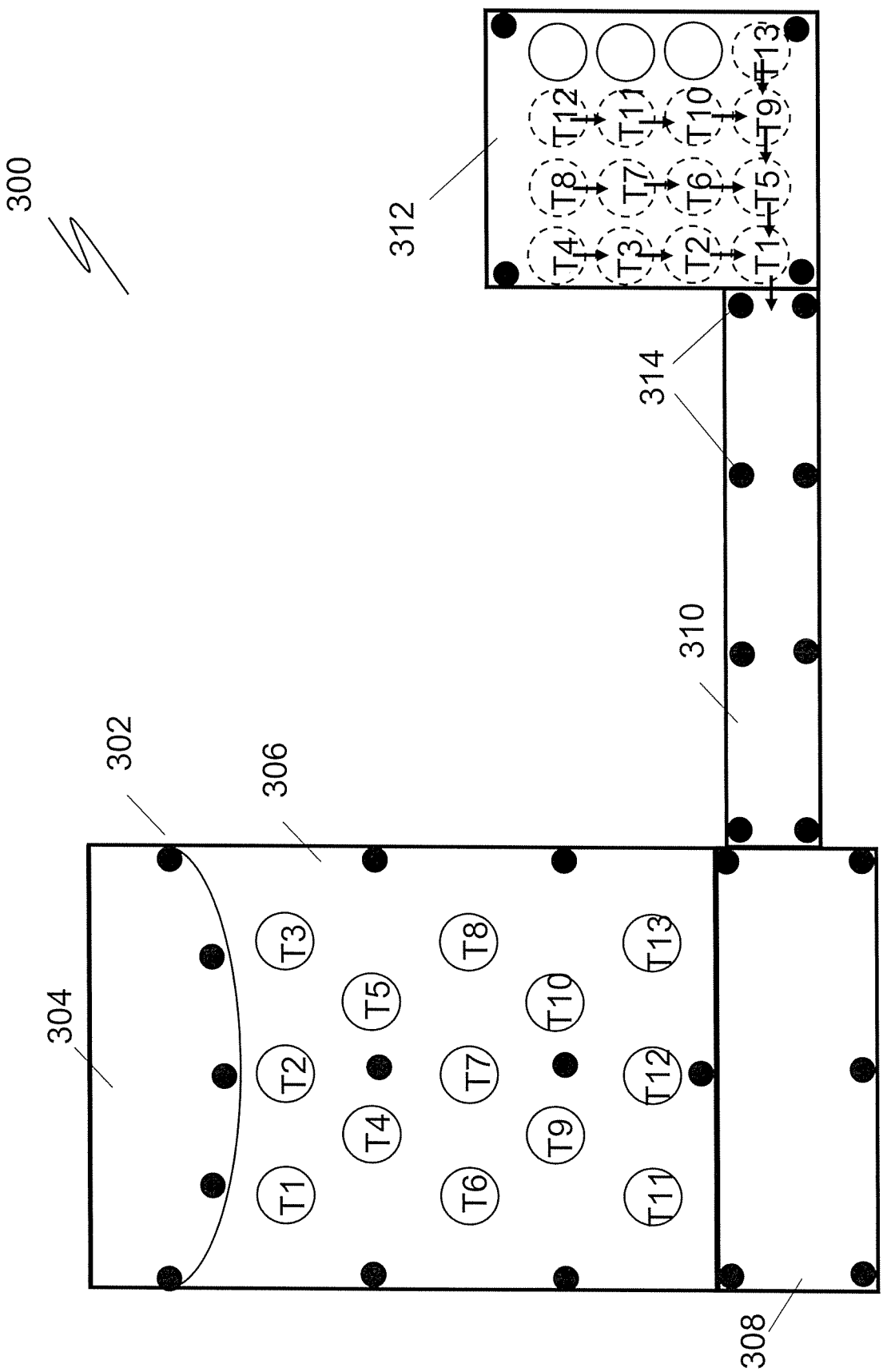
300
312
T1
T2
T3
T4
T5
T6
T7
T8
T9
T10
T11
T12
T13
314
310
302
306
304
308

Fig. 3

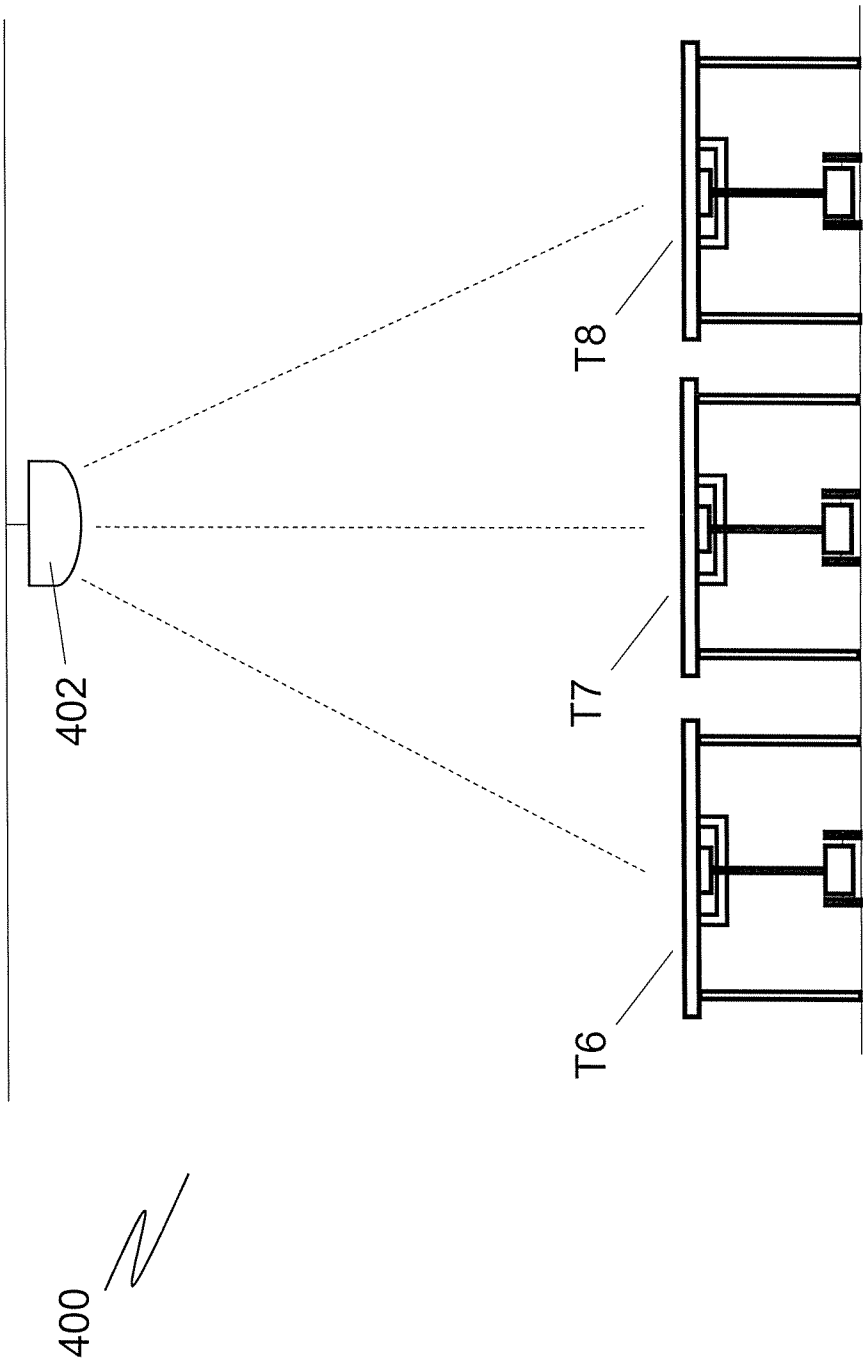

Fig. 4

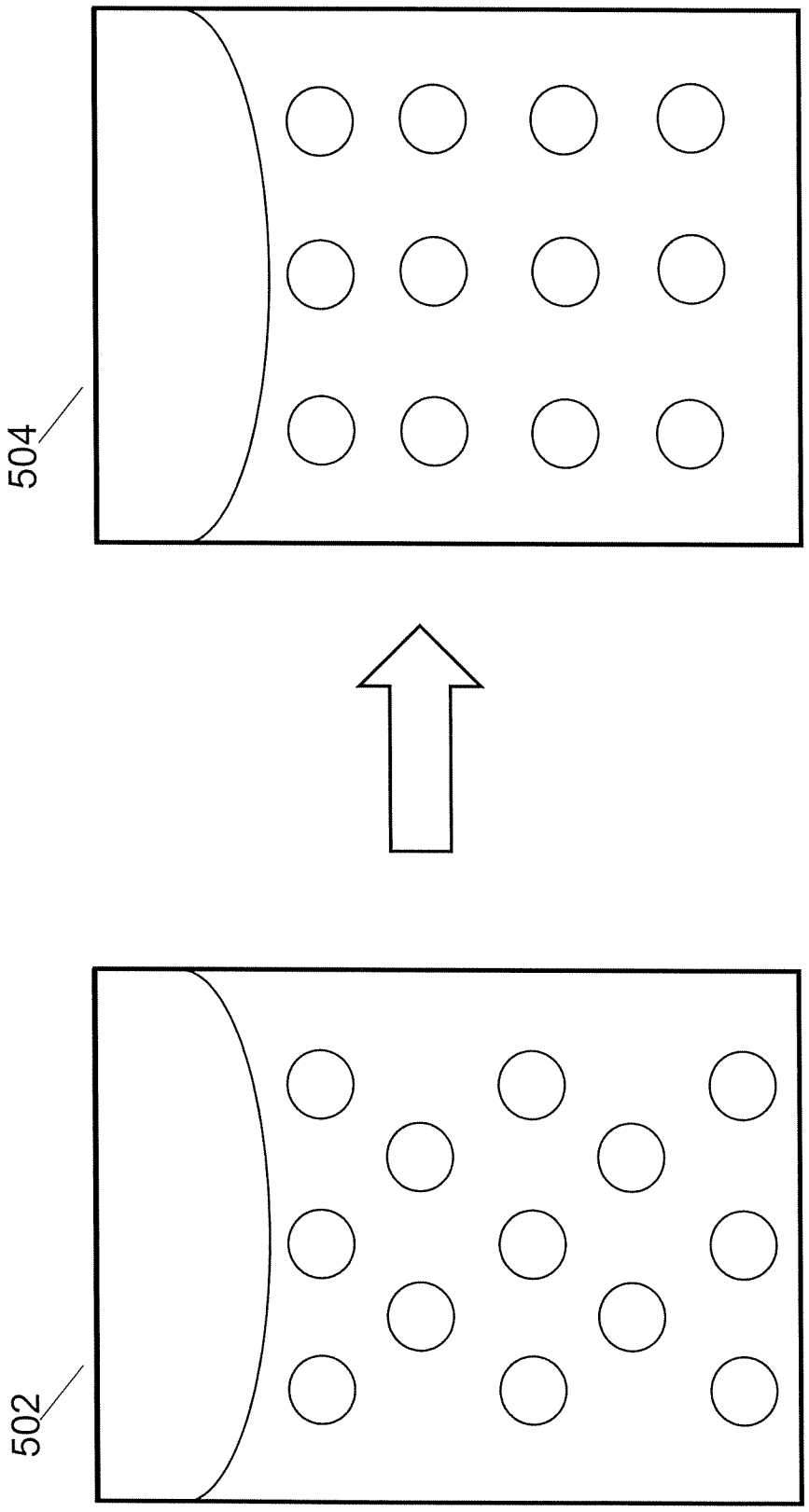

Fig. 5

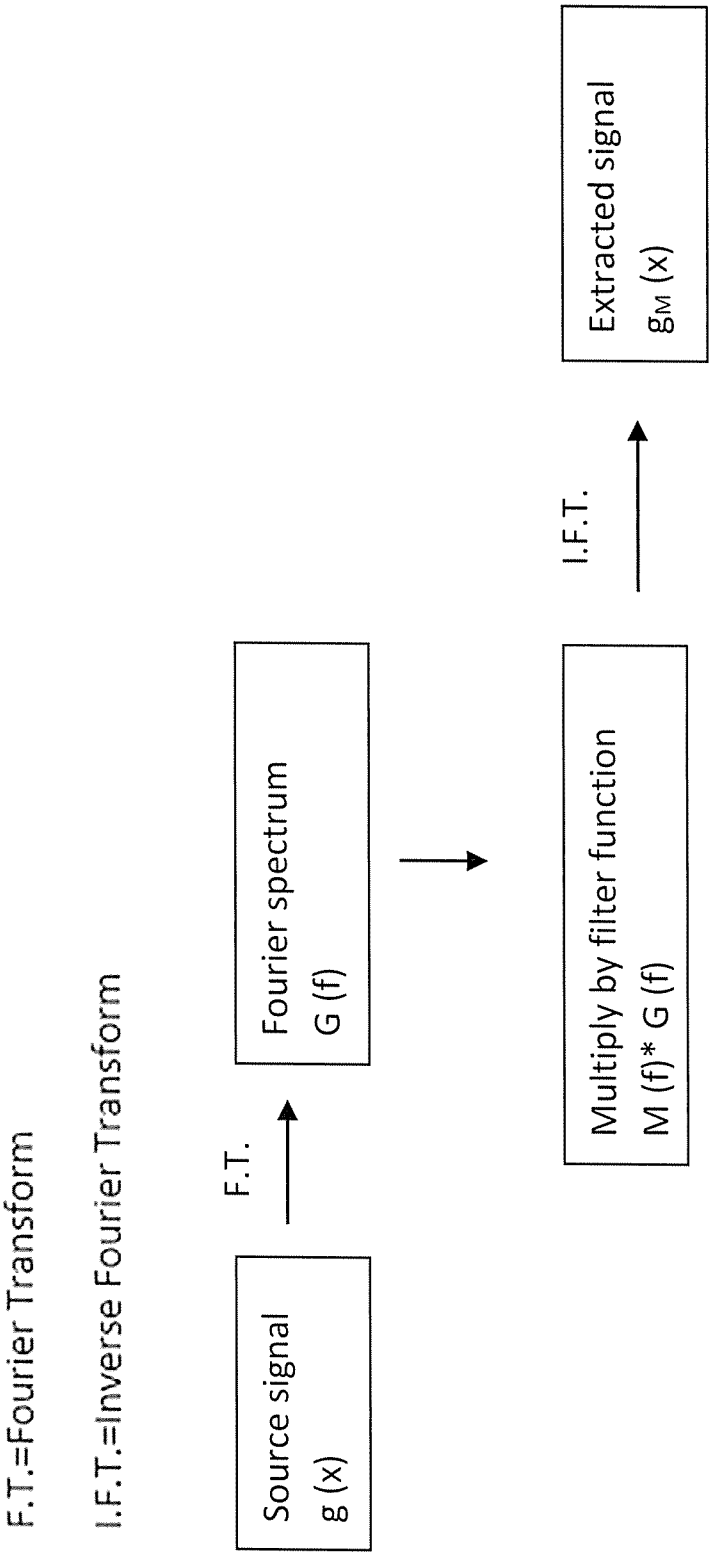
F.T.=Fourier Transform
I.F.T.=Inverse Fourier Transform
Source signal
g (x)
F.T.
Fourier spectrum
G (f)
Multiply by filter function
M (f)* G (f)
I.F.T.
Extracted signal
g_M (x)

Fig. 6