(12) INTERNATIONAL APPLICATION PUBLISHED UNDER THE PATENT COOPERATION TREATY (PCT)

(19) World Intellectual Property Organization
International Bureau

(43) International Publication Date
23 February 2006 (23.02.2006)

PCT

(10) International Publication Number
WO 2006/019913 A1

(51) International Patent Classification[7]: C30B 15/10

(21) International Application Number:
PCT/US2005/024996

(22) International Filing Date: 14 July 2005 (14.07.2005)

(25) Filing Language: English

(26) Publication Language: English

(30) Priority Data:
10/898,148 23 July 2004 (23.07.2004) US

(71) Applicant *(for all designated States except US)*: **MEMC ELECTRONIC MATERIALS, INC.** [US/US]; 501 Pearl Drive, P.O. Box 8, St. Peters, MO 63376 (US).

(72) Inventors; and

(75) Inventors/Applicants *(for US only)*: **HOLDER, John, Davis** [US/US]; 73 Schooner Lane, Lake St. Louis, MO 63367 (US). **PHILLIPS, Richard, J.** [US/US]; 96 Deer Meadow Court, St. Charles, MO 63304 (US).

(74) Agents: **WALTERS, Christopher, N.** et al.; Senniger, Powers, Leavitt & Roedel, #1 Metropolitan Square, 16th Floor, St. Louis, MO 63102 (US).

(81) Designated States *(unless otherwise indicated, for every kind of national protection available)*: AE, AG, AL, AM, AT, AU, AZ, BA, BB, BG, BR, BW, BY, BZ, CA, CH, CN, CO, CR, CU, CZ, DE, DK, DM, DZ, EC, EE, EG, ES, FI, GB, GD, GE, GH, GM, HR, HU, ID, IL, IN, IS, JP, KE, KG, KM, KP, KR, KZ, LC, LK, LR, LS, LT, LU, LV, MA, MD, MG, MK, MN, MW, MX, MZ, NA, NG, NI, NO, NZ, OM, PG, PH, PL, PT, RO, RU, SC, SD, SE, SG, SK, SL, SM, SY, TJ, TM, TN, TR, TT, TZ, UA, UG, US, UZ, VC, VN, YU, ZA, ZM, ZW.

(84) Designated States *(unless otherwise indicated, for every kind of regional protection available)*: ARIPO (BW, GH, GM, KE, LS, MW, MZ, NA, SD, SL, SZ, TZ, UG, ZM, ZW), Eurasian (AM, AZ, BY, KG, KZ, MD, RU, TJ, TM), European (AT, BE, BG, CH, CY, CZ, DE, DK, EE, ES, FI, FR, GB, GR, HU, IE, IS, IT, LT, LU, LV, MC, NL, PL, PT, RO, SE, SI, SK, TR), OAPI (BF, BJ, CF, CG, CI, CM, GA, GN, GQ, GW, ML, MR, NE, SN, TD, TG).

Published:
— *with international search report*

For two-letter codes and other abbreviations, refer to the "Guidance Notes on Codes and Abbreviations" appearing at the beginning of each regular issue of the PCT Gazette.

(54) **Title:** PARTIALLY DEVITRIFIED CRUCIBLE

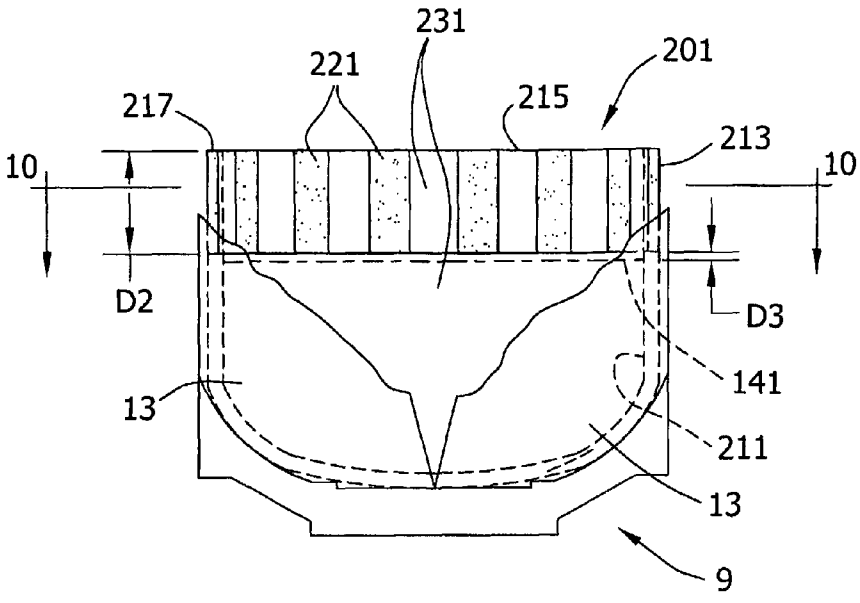

(57) **Abstract:** A vitreous crucible for holding semiconductor material during a moncrystalline ingot growing process has a sidewall. Part of the sidewall is coated with a devitrification promoter and part of the sidewall is substantially free from devitrification promoter coating. When the crucible is heated as it would be during an ingot growing process, the devitrification promoter induces crystallization of portions of the sidewall, thereby forming enhanced stiffness sidewall portions. Areas that are substantially free from devitrification promoters remain vitreous and are softened by the heat. These become stress accommodating sidewall portions. Flow of the vitreous material in the stress accommodating sidewall portions relieves stresses that would otherwise build up in the sidewall.

WO 2006/019913 A1