(12) INTERNATIONAL APPLICATION PUBLISHED UNDER THE PATENT COOPERATION TREATY (PCT)

(19) World Intellectual Property Organization
International Bureau

(43) International Publication Date
19 March 2009 (19.03.2009)

PCT

(10) International Publication Number
WO 2009/035947 A1

(51) International Patent Classification:
F16J 15/02 (2006.01) *E21B 33/03* (2006.01)
F16J 15/18 (2006.01) *F16J 15/10* (2006.01)
F16J 15/32 (2006.01) *F16J 15/16* (2006.01)

(21) International Application Number:
PCT/US2008/075620

(22) International Filing Date:
8 September 2008 (08.09.2008)

(25) Filing Language: English

(26) Publication Language: English

(30) Priority Data:
60/972,049 13 September 2007 (13.09.2007) US

(71) Applicant *(for all designated States except US)*: **CAMERON INTERNATIONAL CORPORATION** [US/US]; 4646 W. Sam Houston Parkway North, Houston, Texas 77041 (US).

(72) Inventor; and

(75) Inventor/Applicant *(for US only)*: **KOCUREK, Christopher** [US/US]; 10715 Brookshire Ln, Houston, Texas 77041 (US).

(74) Agent: **SWANSON, Tait R.**; 7915 FM 1960 West, Suite 330, Houston, TX 77070 (US).

(81) Designated States *(unless otherwise indicated, for every kind of national protection available)*: AE, AG, AL, AM, AO, AT, AU, AZ, BA, BB, BG, BH, BR, BW, BY, BZ, CA, CH, CN, CO, CR, CU, CZ, DE, DK, DM, DO, DZ, EC, EE, EG, ES, FI, GB, GD, GE, GH, GM, GT, HN, HR, HU, ID, IL, IN, IS, JP, KE, KG, KM, KN, KP, KR, KZ, LA, LC, LK, LR, LS, LT, LU, LY, MA, MD, ME, MG, MK, MN, MW, MX, MY, MZ, NA, NG, NI, NO, NZ, OM, PG, PH, PL, PT, RO, RS, RU, SC, SD, SE, SG, SK, SL, SM, ST, SV, SY, TJ, TM, TN, TR, TT, TZ, UA, UG, US, UZ, VC, VN, ZA, ZM, ZW.

(84) Designated States *(unless otherwise indicated, for every kind of regional protection available)*: ARIPO (BW, GH, GM, KE, LS, MW, MZ, NA, SD, SL, SZ, TZ, UG, ZM, ZW), Eurasian (AM, AZ, BY, KG, KZ, MD, RU, TJ, TM), European (AT, BE, BG, CH, CY, CZ, DE, DK, EE, ES, FI, FR, GB, GR, HR, HU, IE, IS, IT, LT, LU, LV, MC, MT, NL, NO, PL, PT, RO, SE, SI, SK, TR), OAPI (BF, BJ, CF, CG, CI, CM, GA, GN, GQ, GW, ML, MR, NE, SN, TD, TG).

Declarations under Rule 4.17:

— *as to applicant's entitlement to apply for and be granted a patent (Rule 4.17(ii))*

— *as to the applicant's entitlement to claim the priority of the earlier application (Rule 4.17(iii))*

[Continued on next page]

(54) Title: MULTI-ELASTOMER SEAL

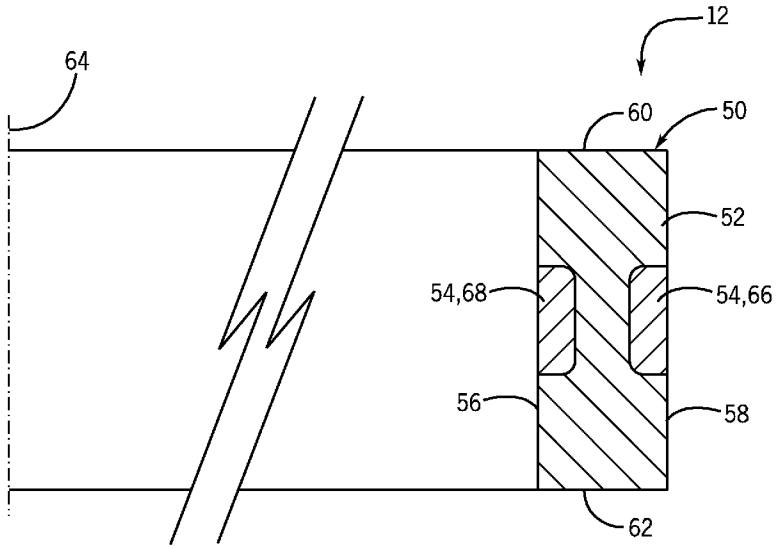

FIG. 2

(57) Abstract: A system, in certain embodiments has, a fluid seal having a seal body, including a seal interface having one or more engagement portions, a first elastomer portion disposed along the seal interface, and a second elastomer portion disposed along the seal interface, wherein the first and second elastomers have material properties that are different from one another.

WO 2009/035947 A1

Published:
— *with international search report*