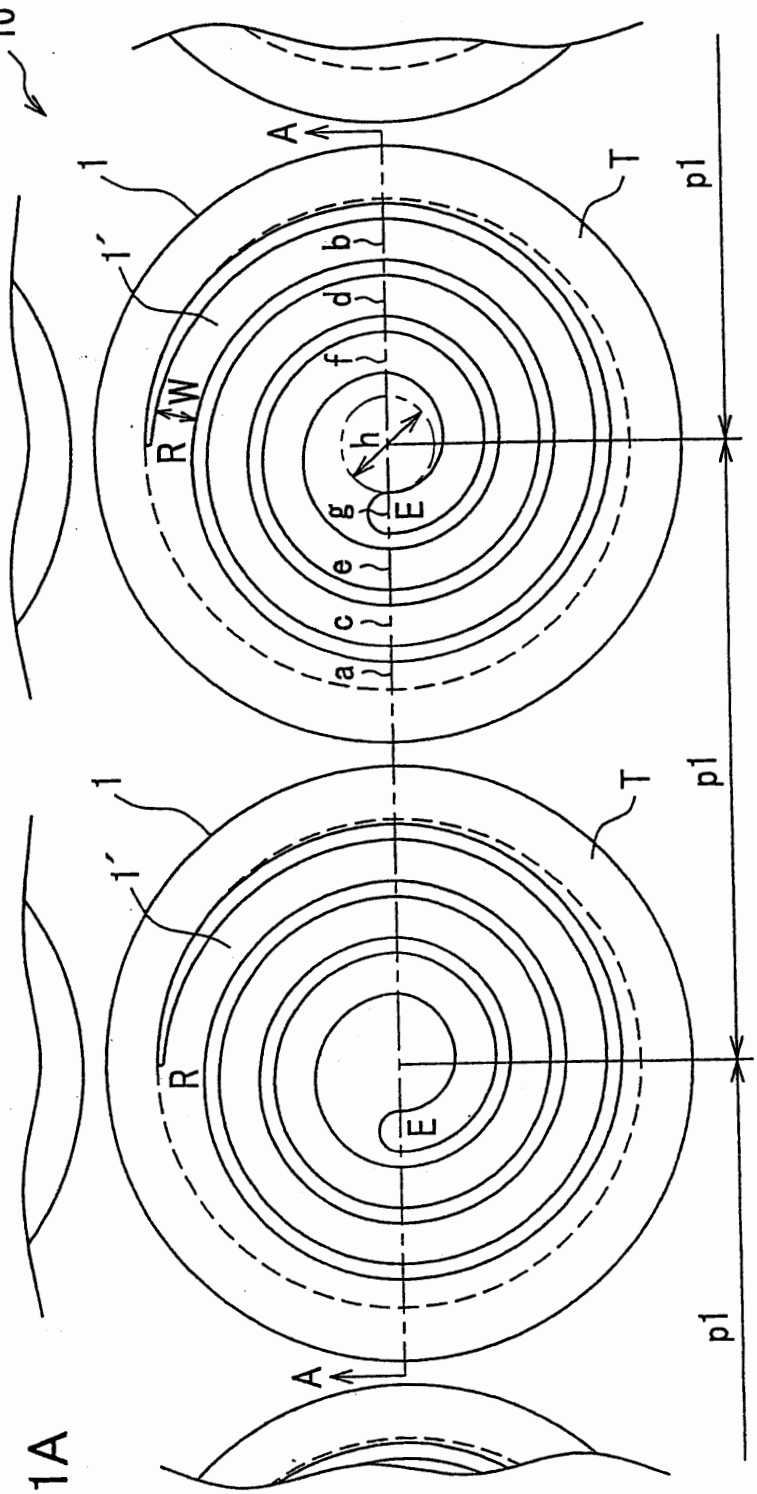

FIG.1A

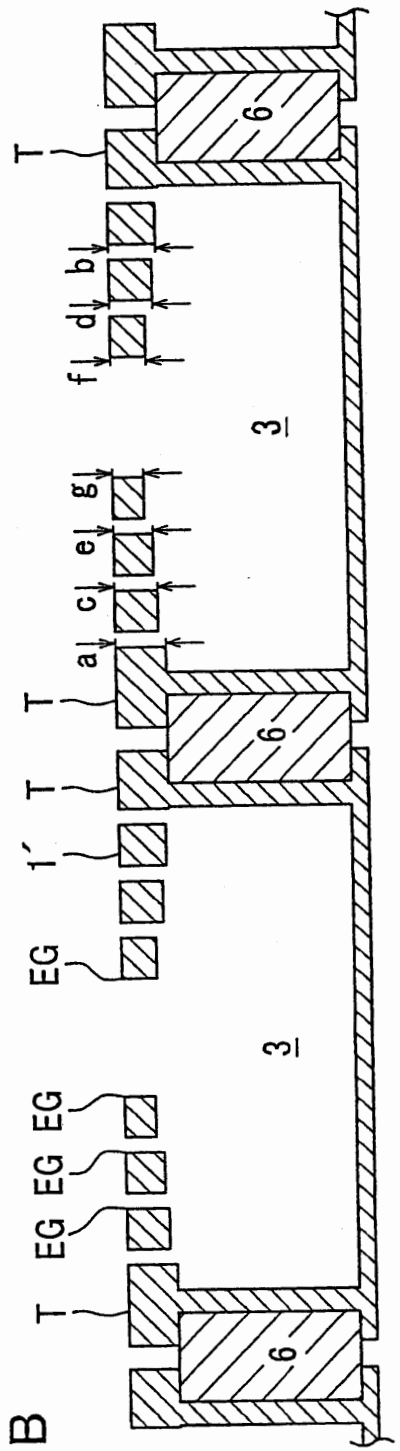

FIG.1B

FIG.2A

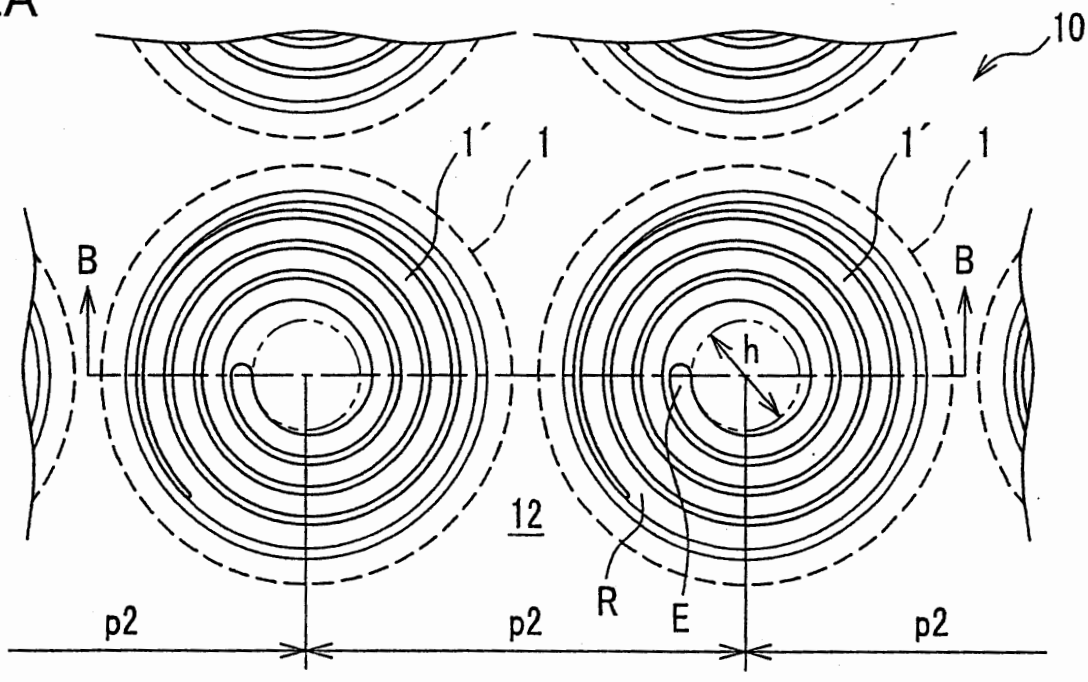

FIG.2B

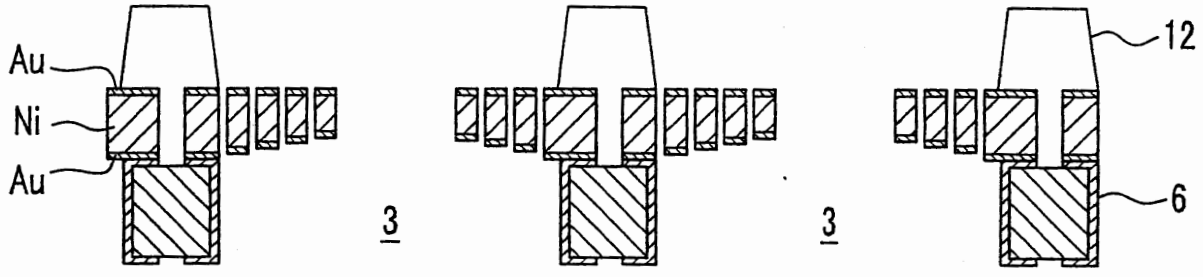

FIG.2C

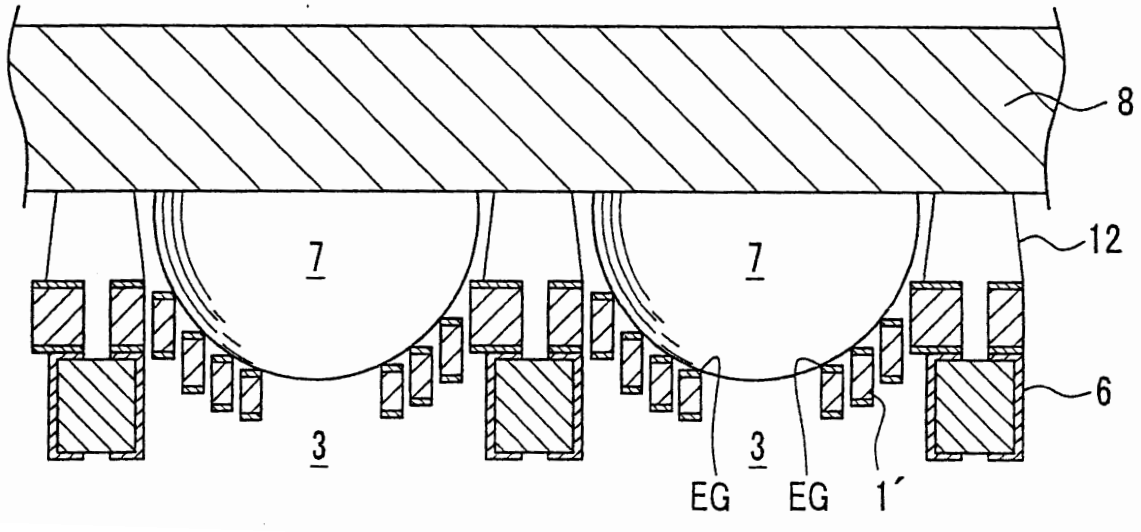

FIG.3

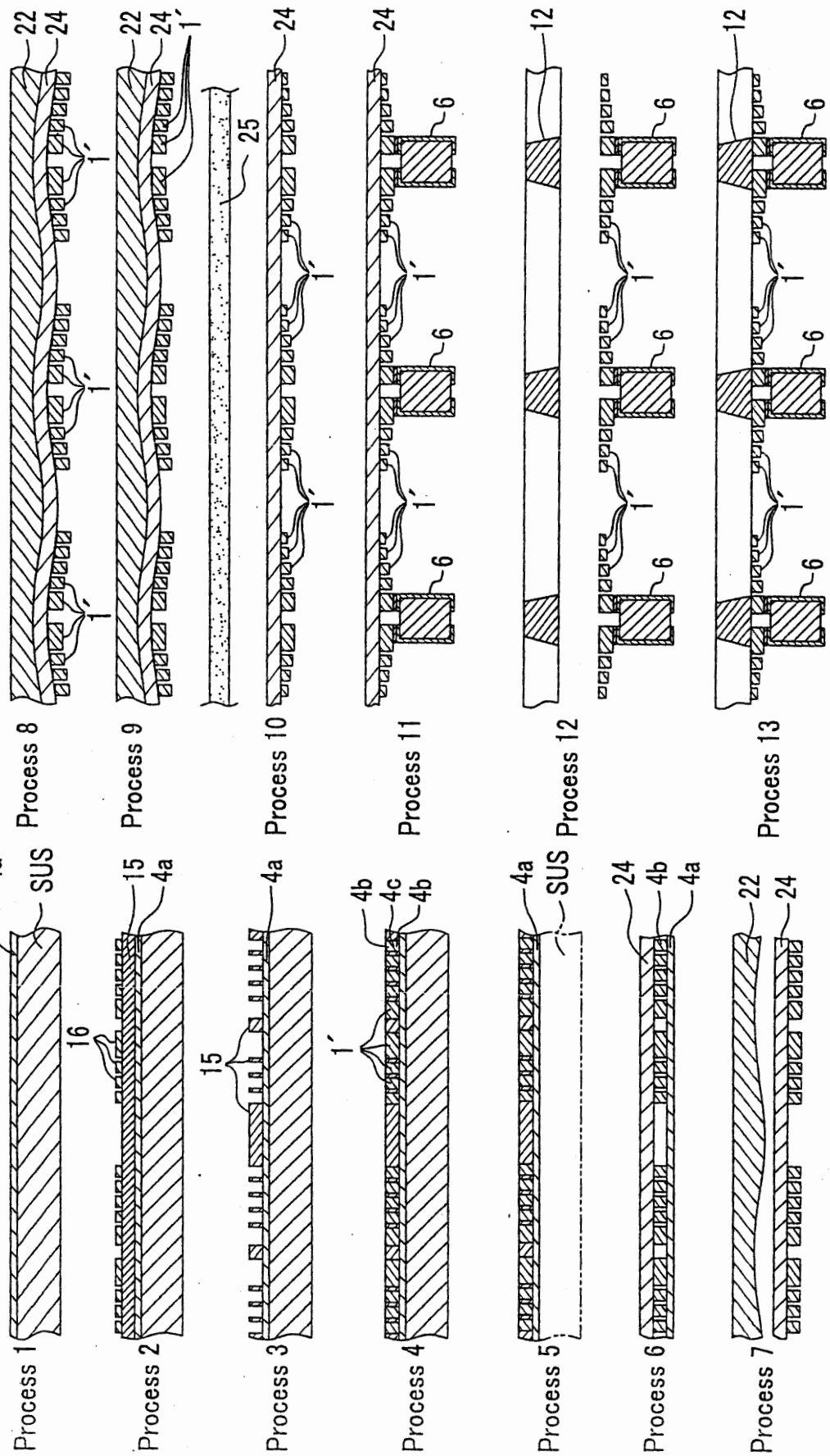
Process 1
4a
SUS
Process 2
16
15
4a
Process 3
15
4a
Process 4
1'
4b
4c
4b
Process 5
4a
SUS
Process 6
24
4b
4a
Process 7
22
24
Process 8
22
24
1'
Process 9
22
24
1'
25
Process 10
24
1'
Process 11
24
1'
6
Process 12
12
Process 13
12
1'
6

FIG.4A

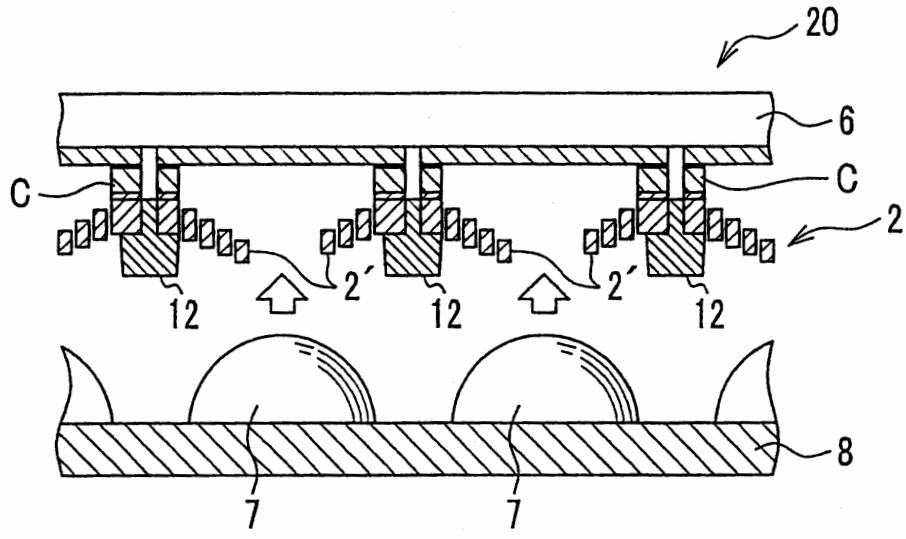

FIG.4B

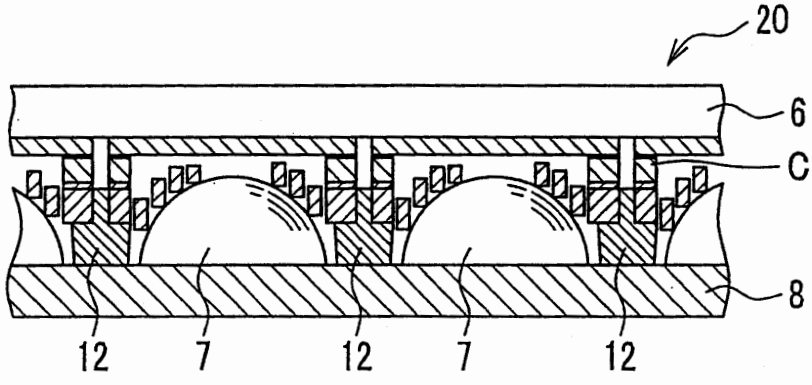

FIG.4C

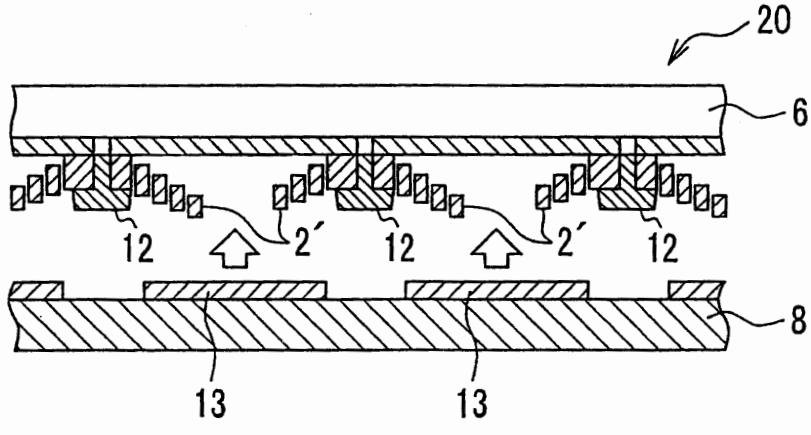

FIG.4D

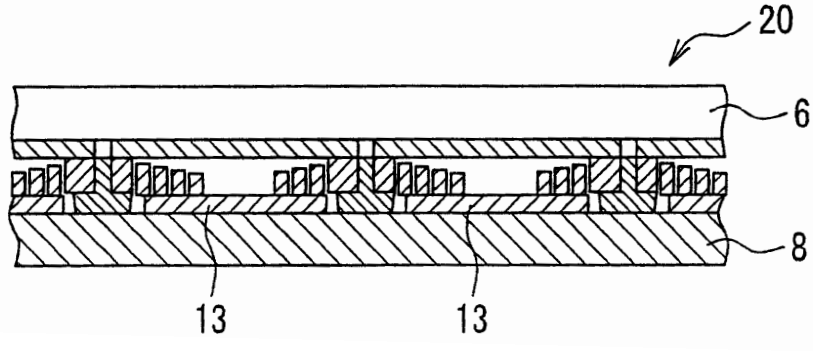

FIG.5

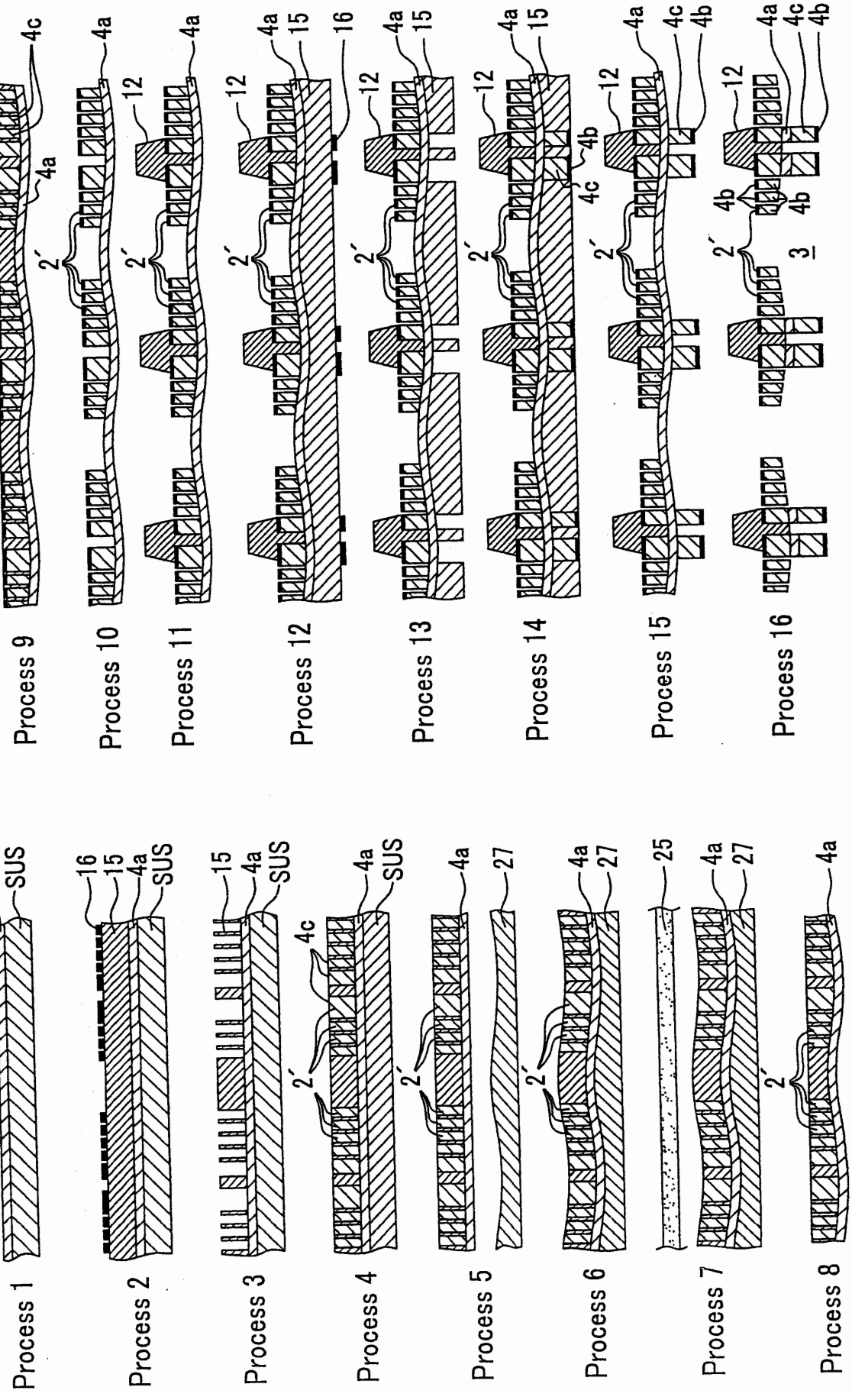
Process 1
Process 2
Process 3
Process 4
Process 5
Process 6
Process 7
Process 8
Process 9
Process 10
Process 11
Process 12
Process 13
Process 14
Process 15
Process 16
SUS
4a
4b
4c
12
15
16
25
27
2´
3

FIG.6

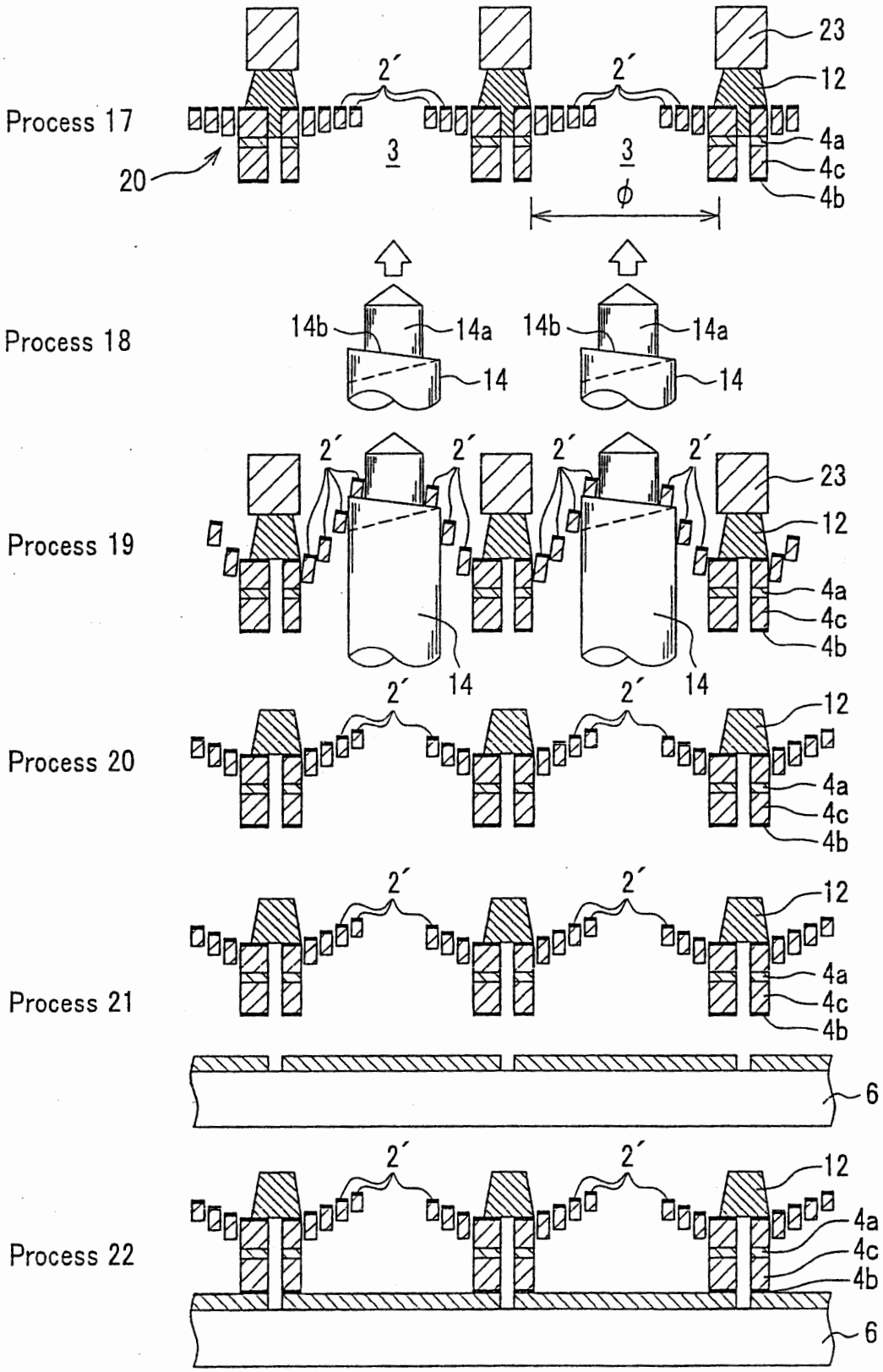
Process 17
Process 18
Process 19
Process 20
Process 21
Process 22
20
2´
3
ϕ
23
12
4a
4c
4b
14b
14a
14
6

FIG.7A

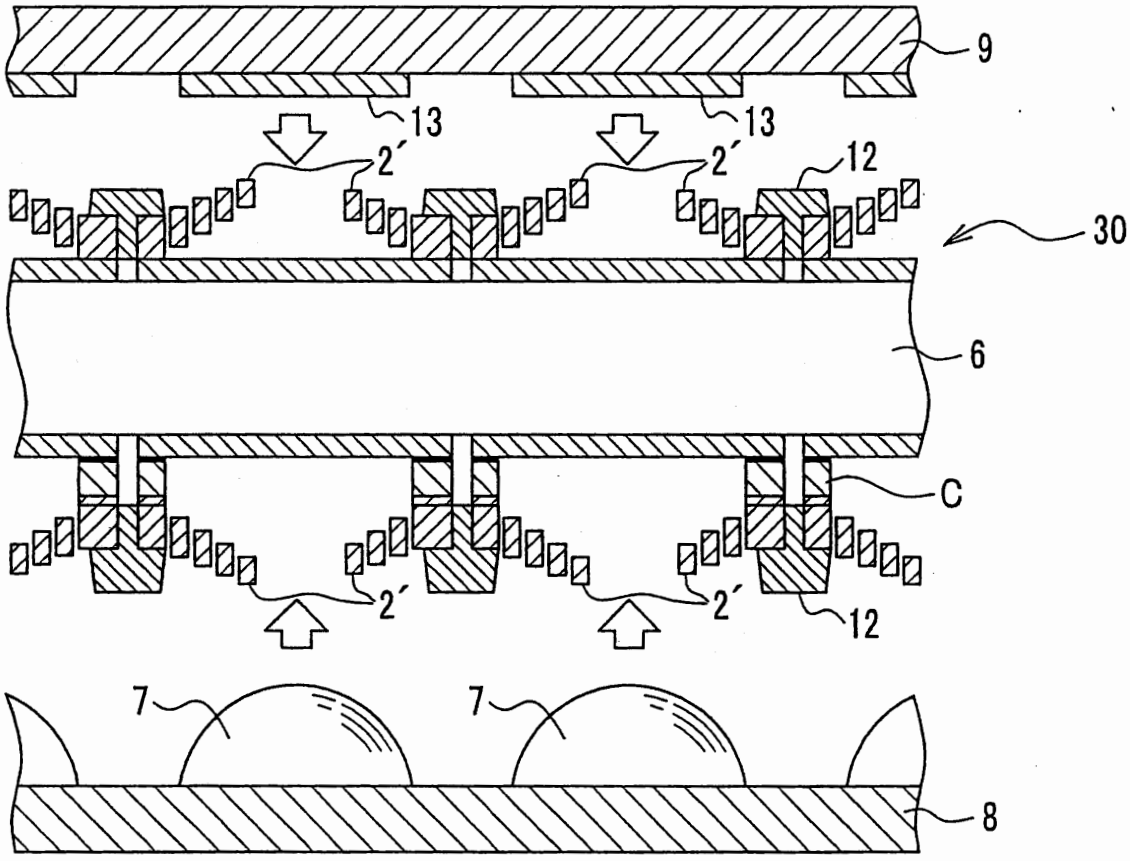

FIG.7B

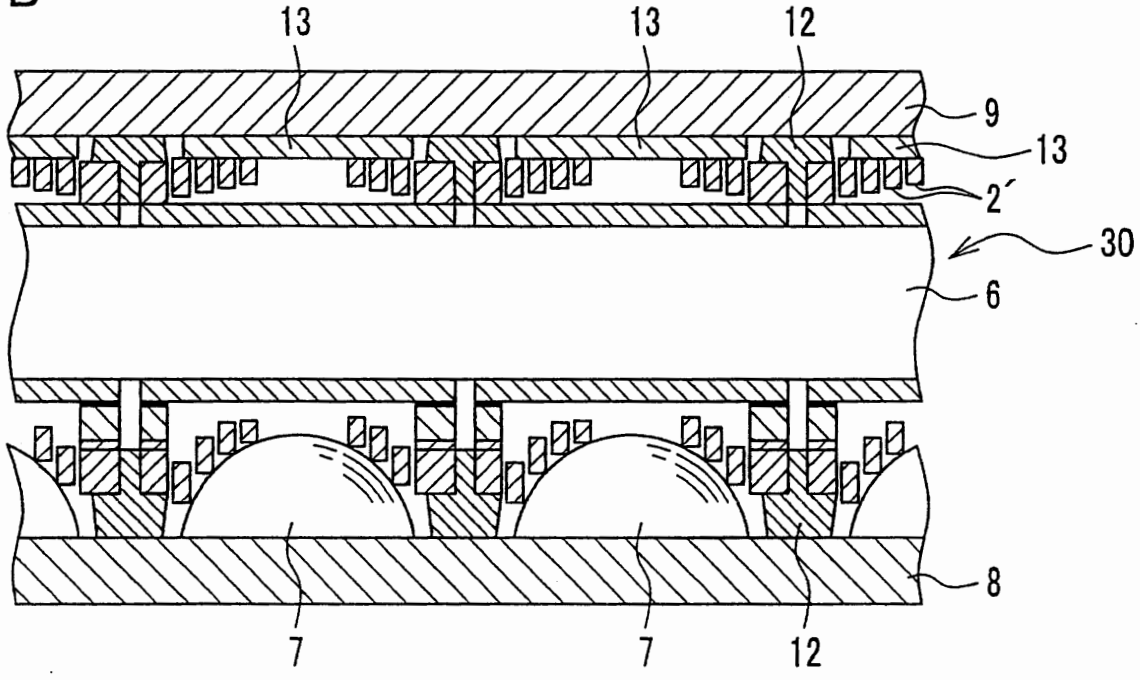

FIG.8A

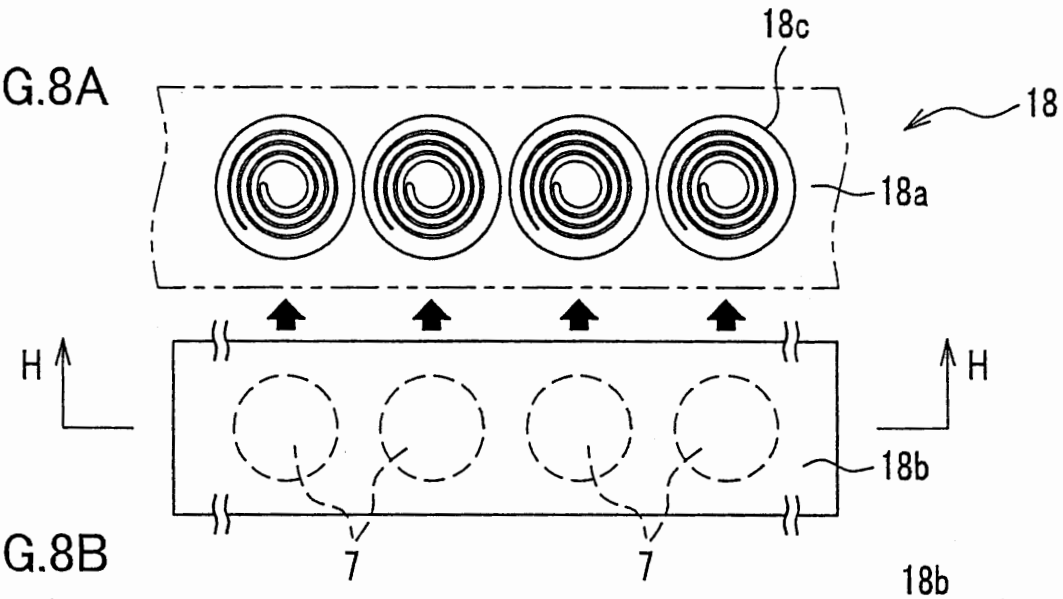

FIG.8B

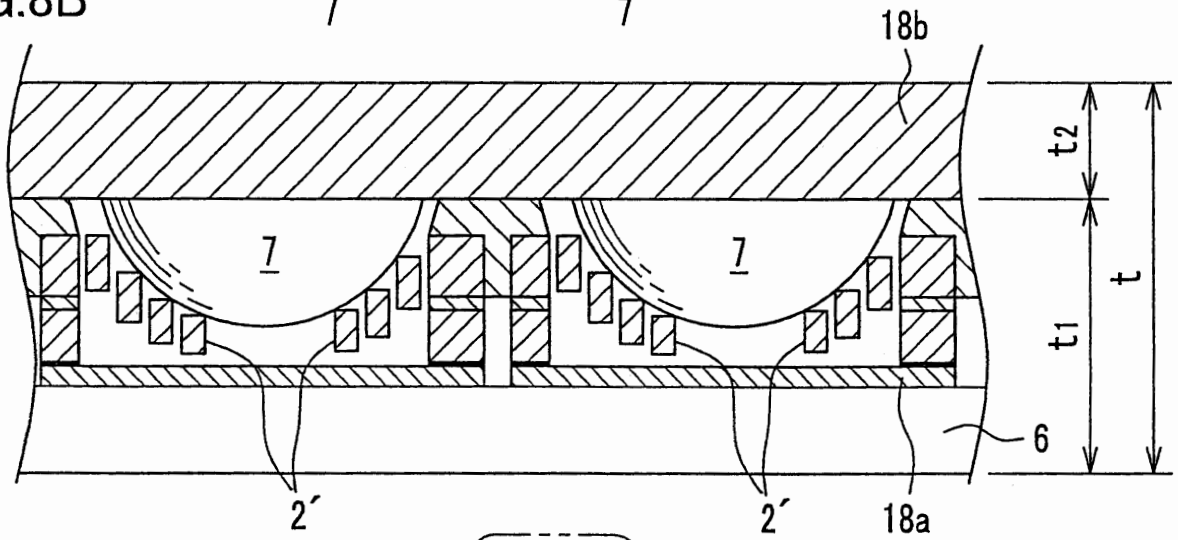

FIG.8C

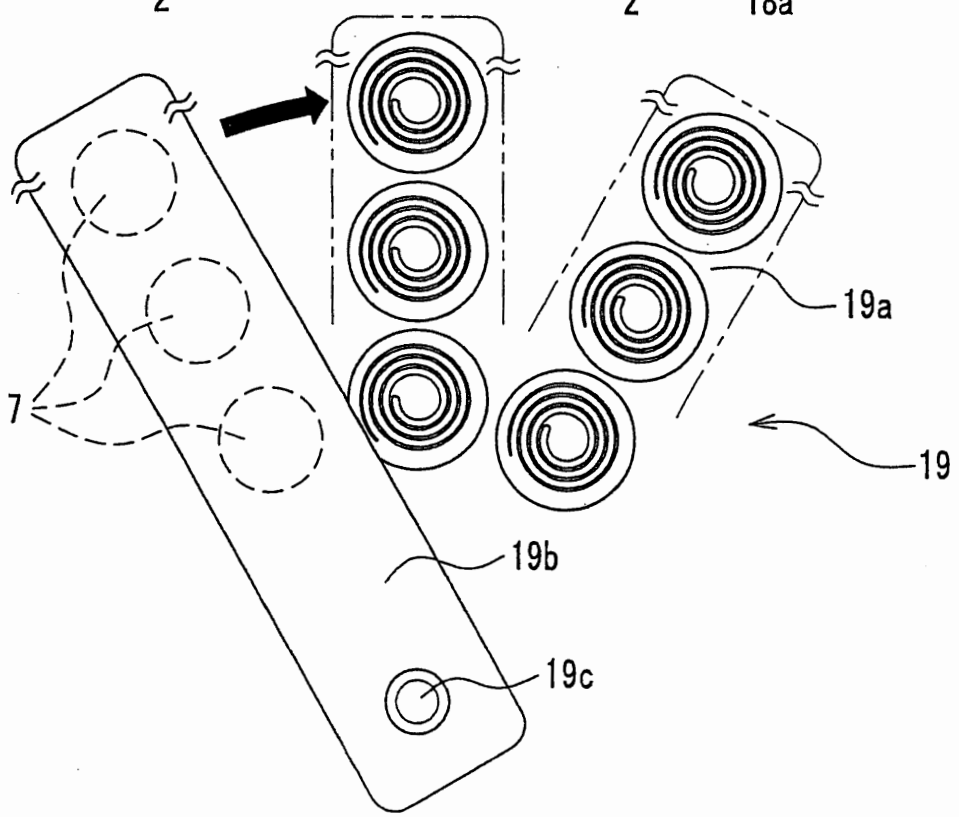

FIG.9A

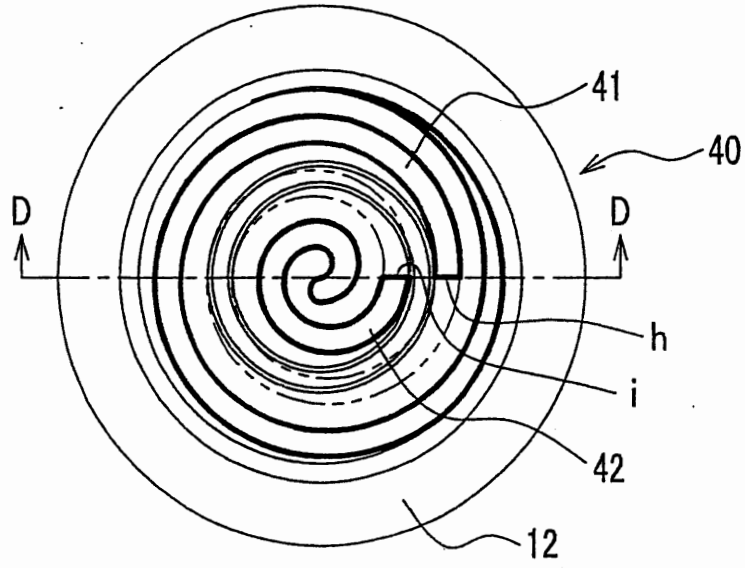

FIG.9B

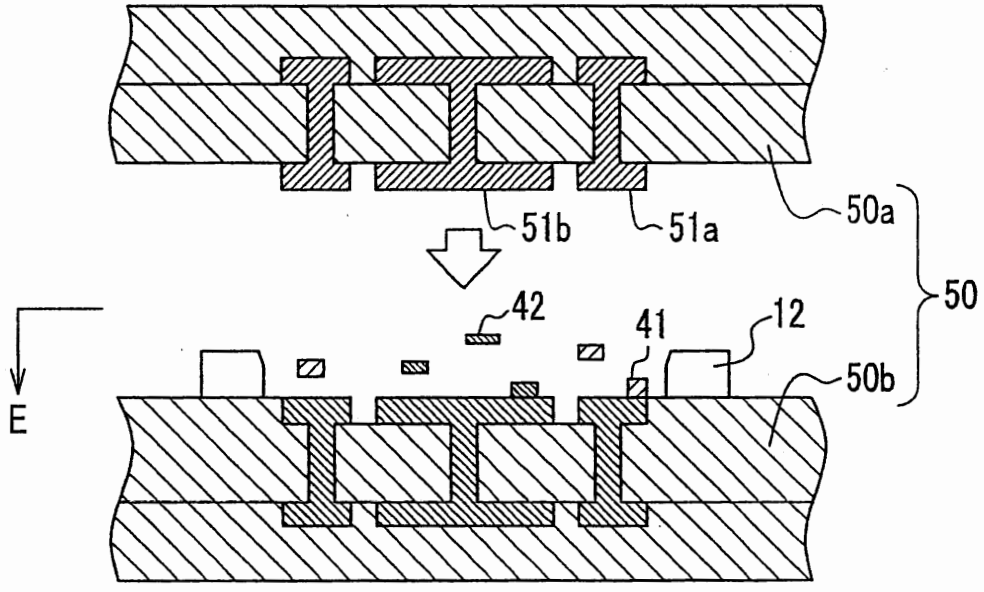

FIG.9C

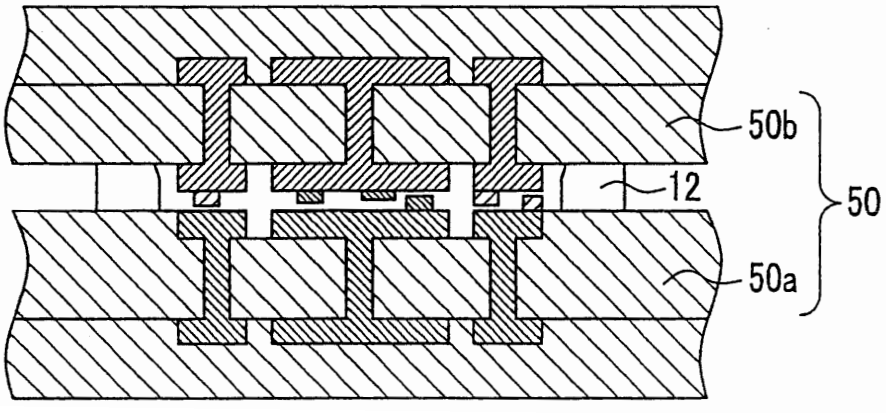

FIG.10A

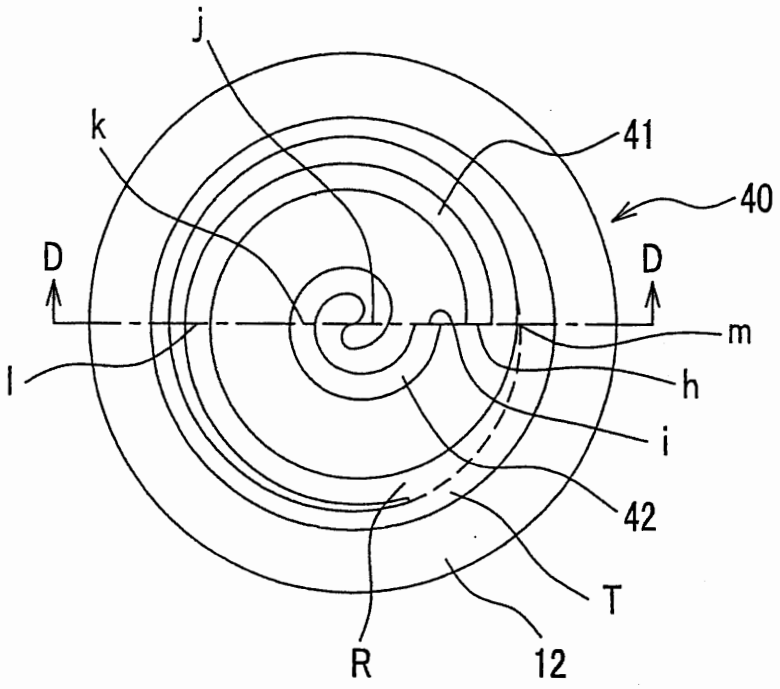

FIG.10B

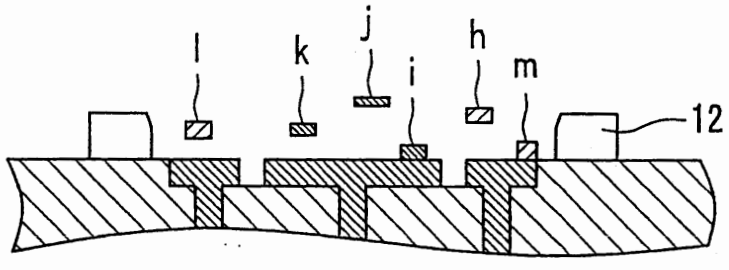

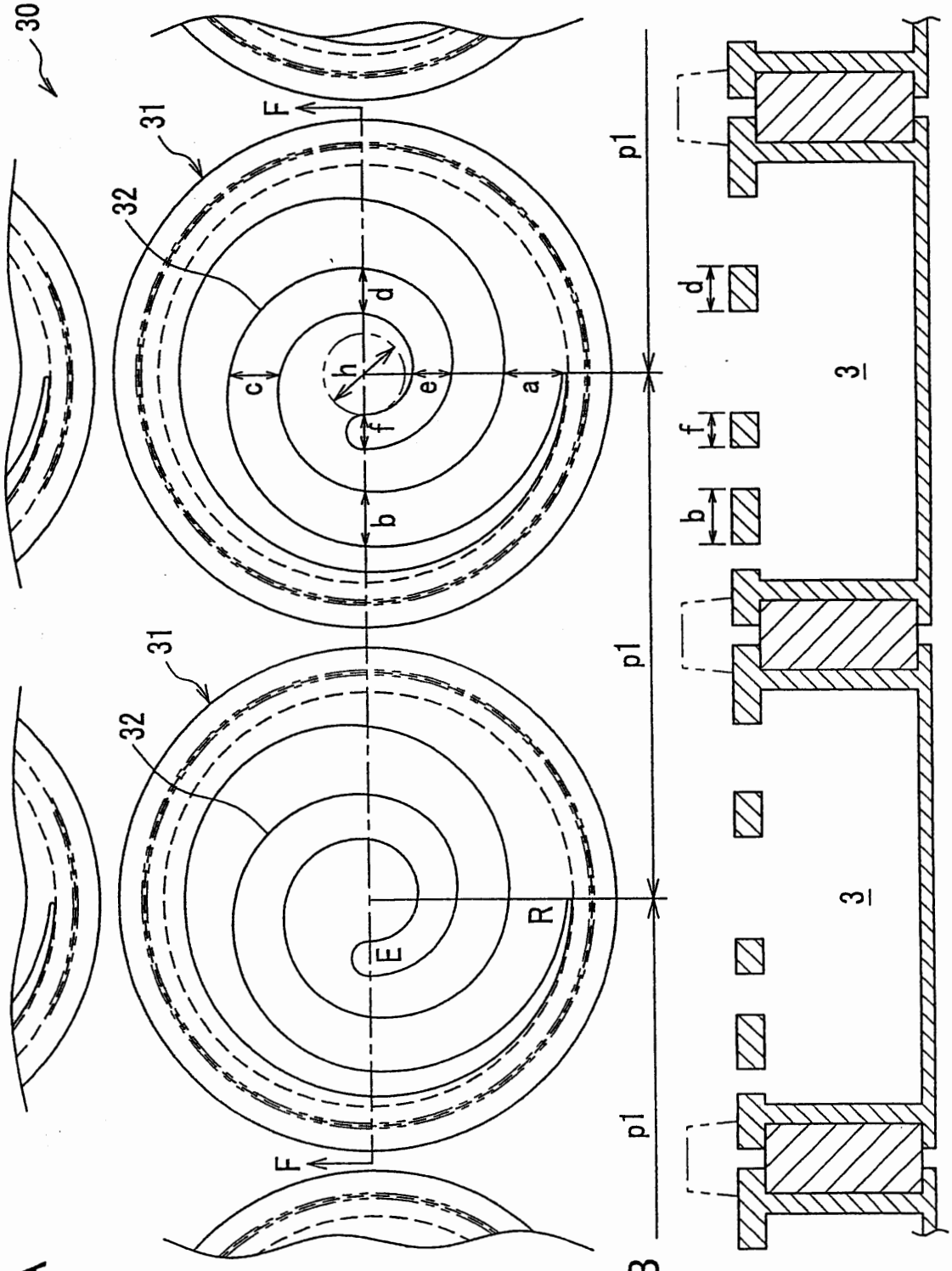

FIG.11A

FIG.11B

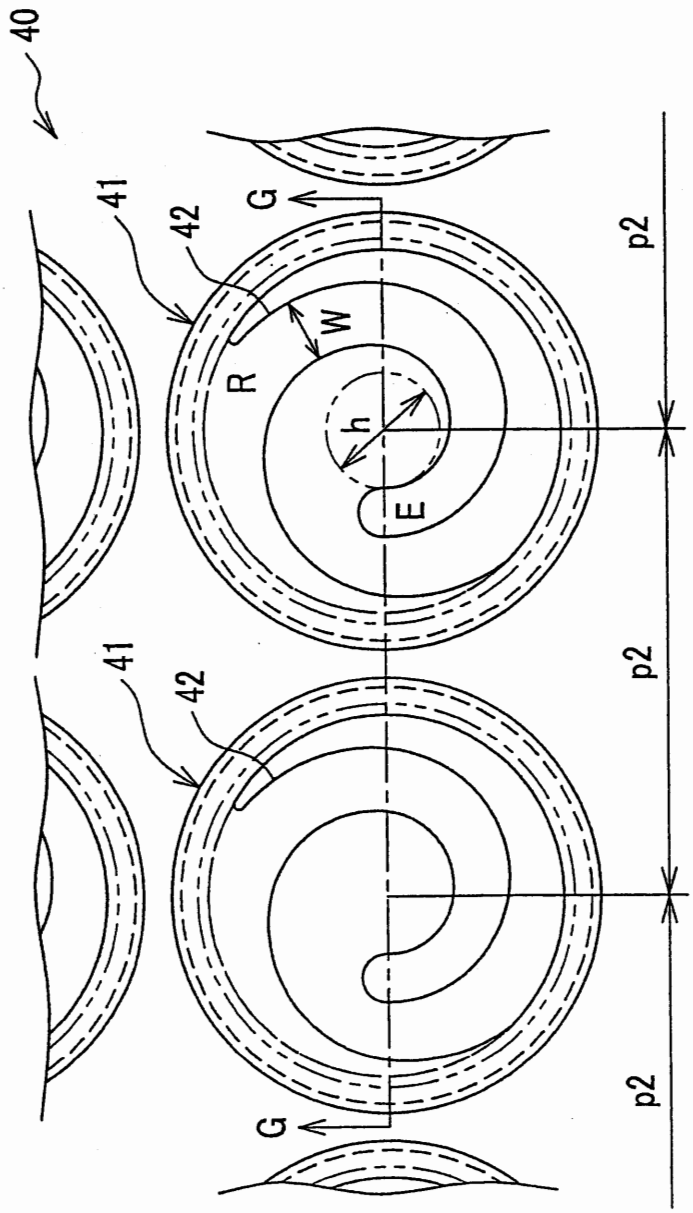

FIG.12A

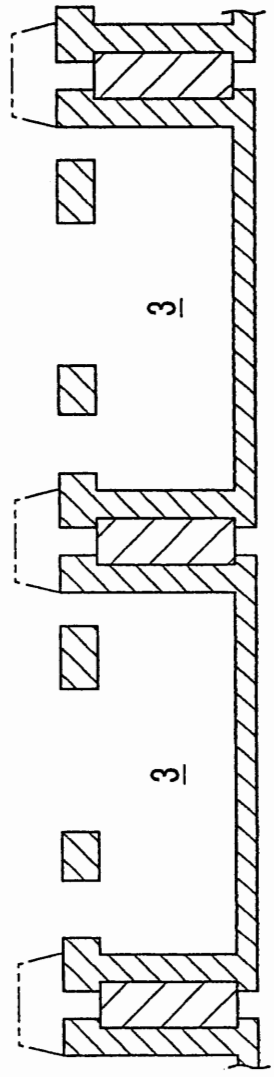

FIG.12B