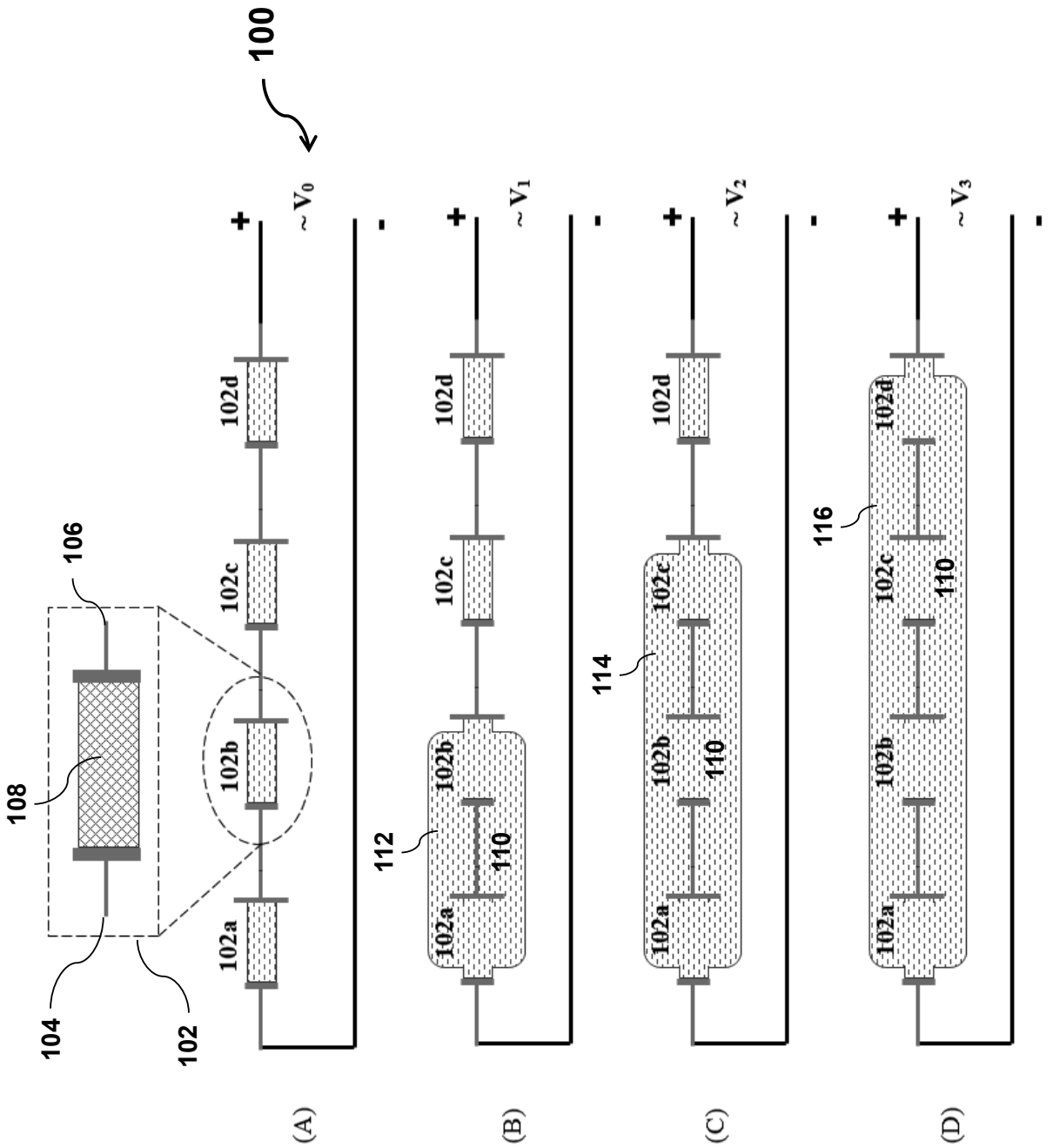
100
~ V0
~ V1
~ V2
~ V3
+
-
102a
102b
102c
102d
110
112
114
116
102
104
106
108
(A)
(B)
(C)
(D)

FIG. 1

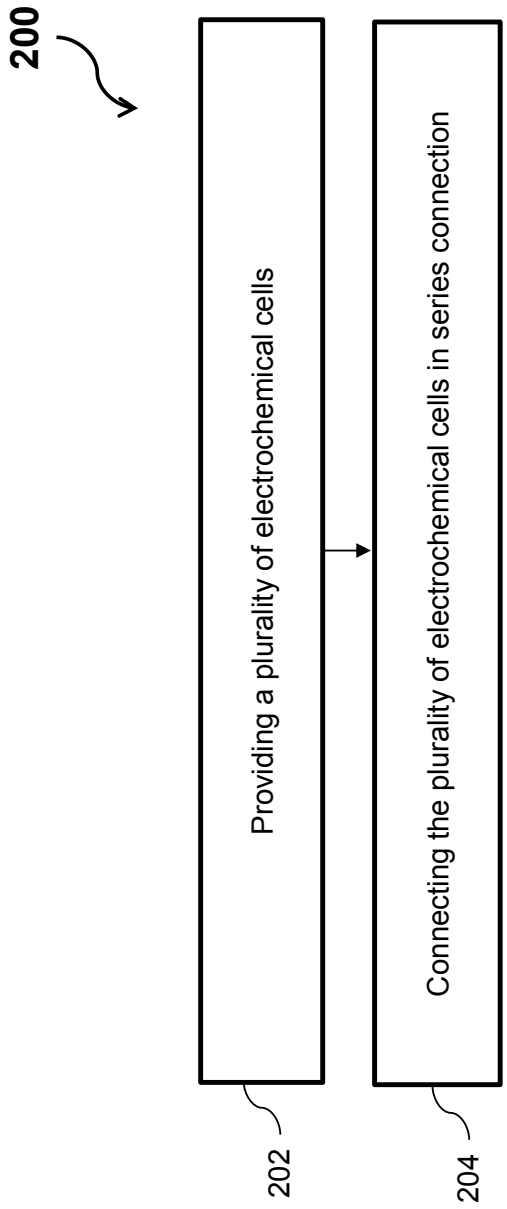
200
Providing a plurality of electrochemical cells
Connecting the plurality of electrochemical cells in series connection
202
204

FIG. 2

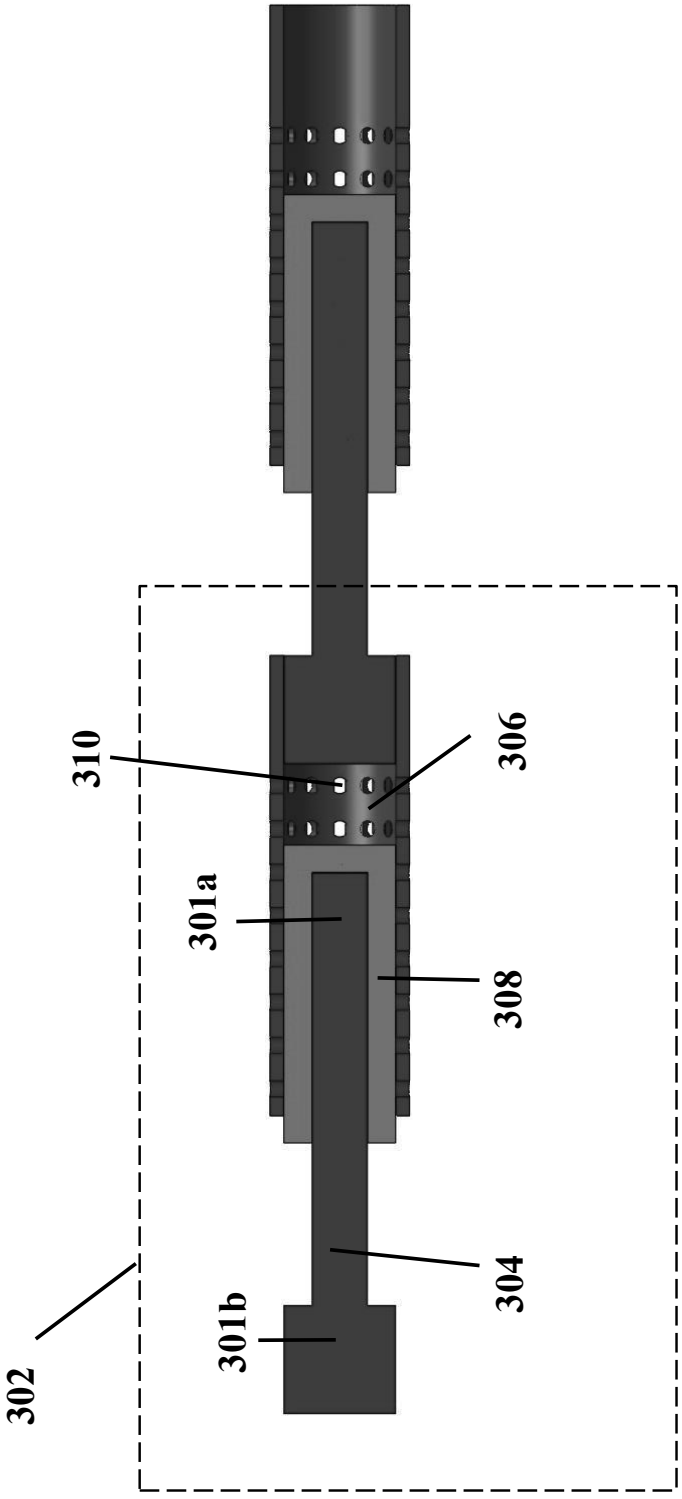

FIG. 3

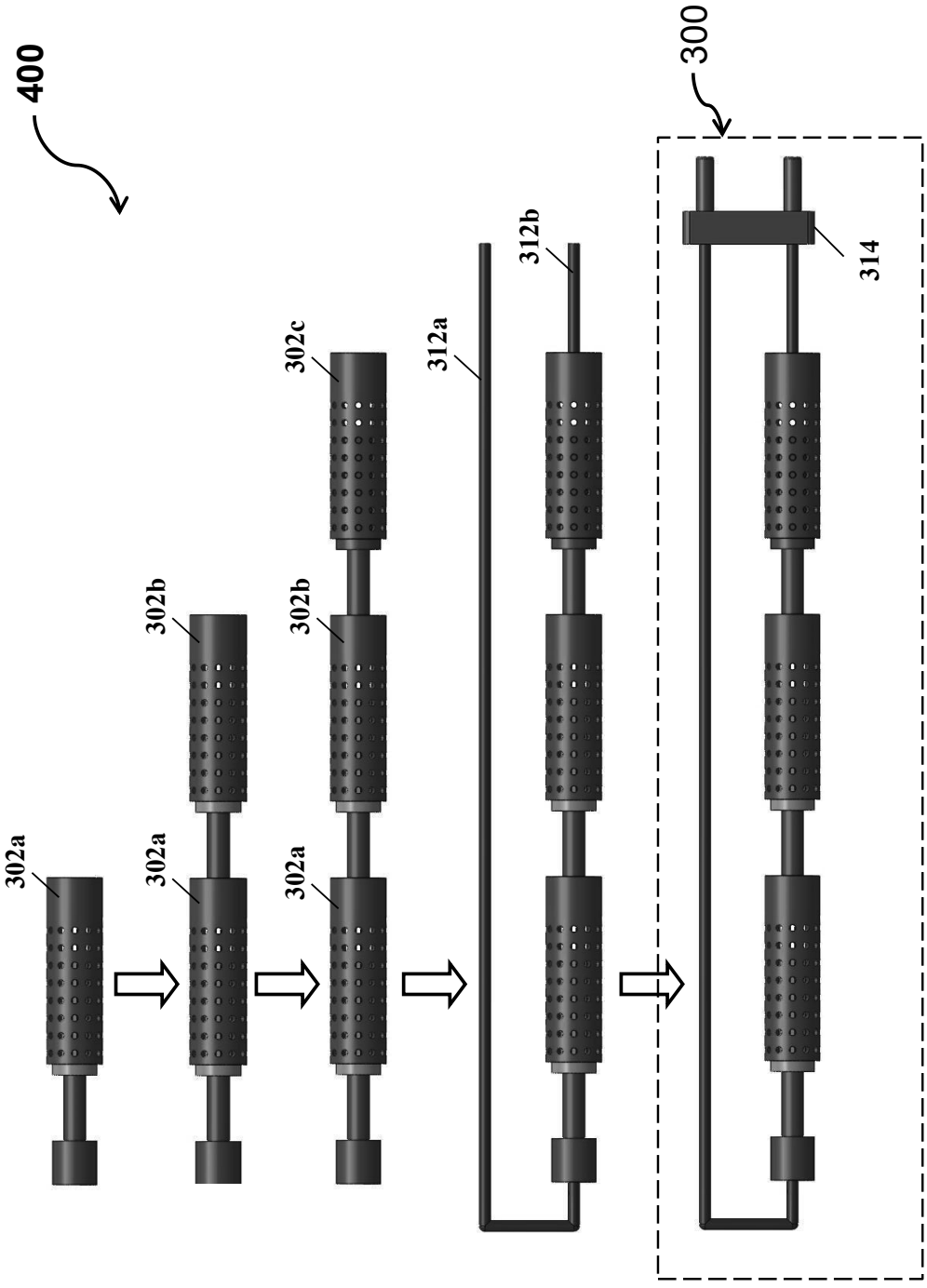

FIG. 4

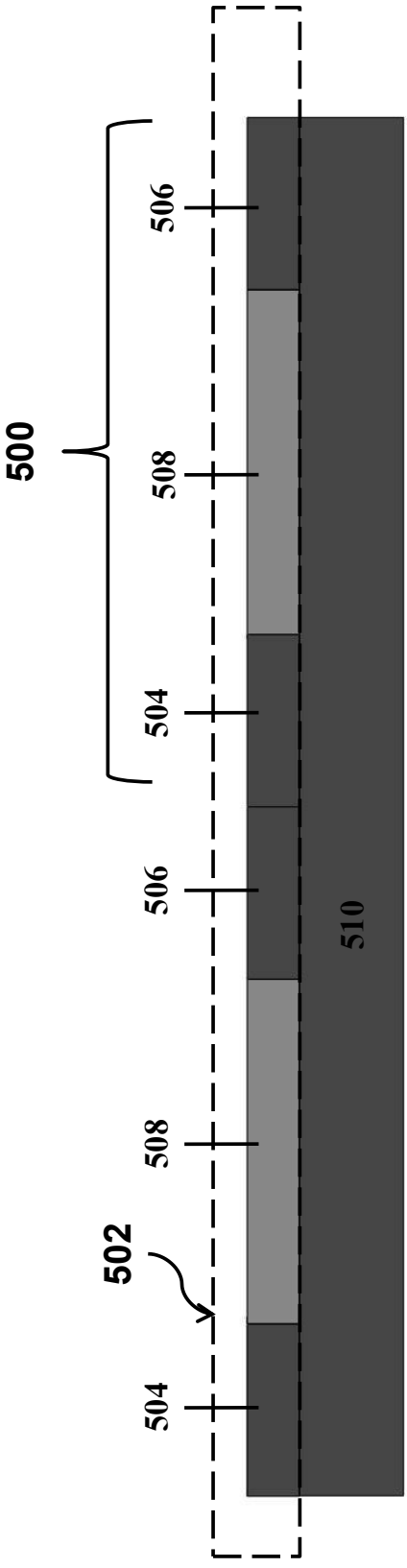

FIG. 5

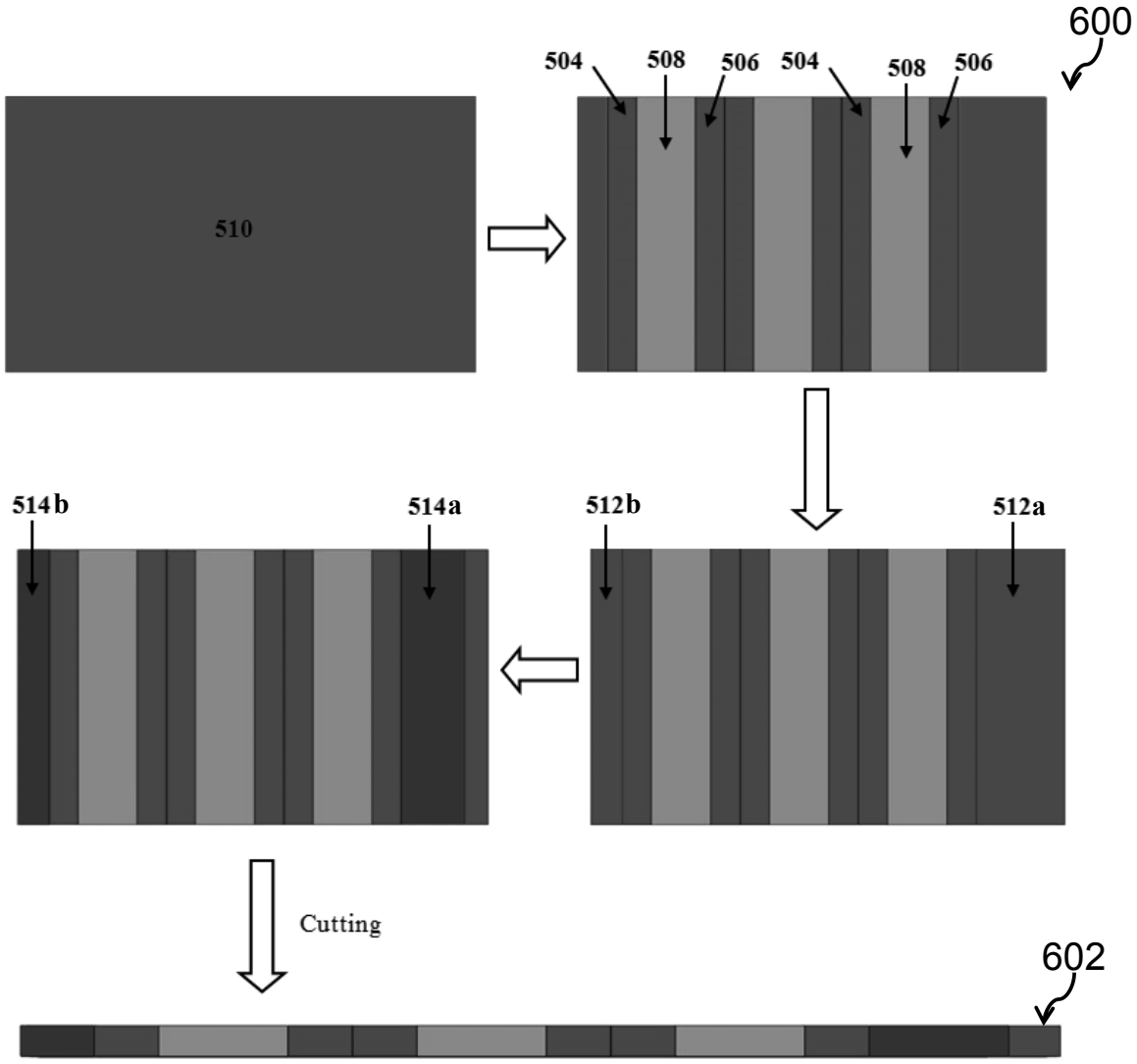
600
504
508
506
504
508
506
510
514b
514a
512b
512a
Cutting
602

FIG. 6

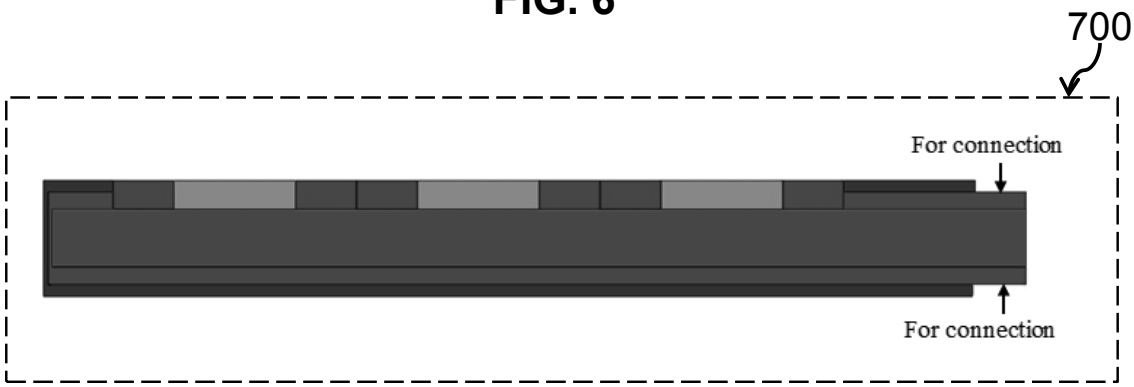
700
For connection
For connection

FIG. 7

FIG. 8A

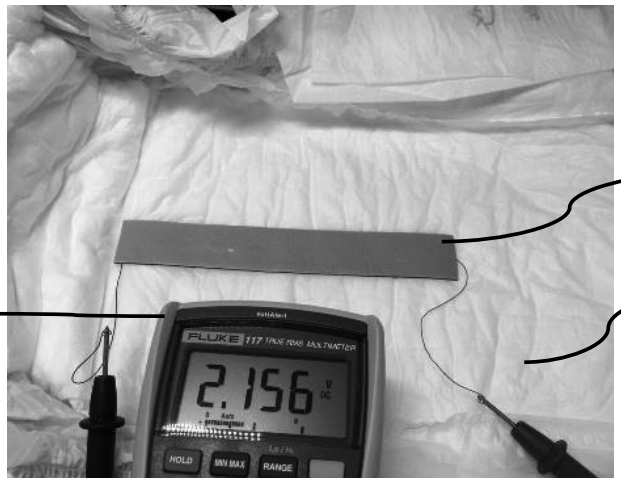

FIG. 8B



FIG. 8C



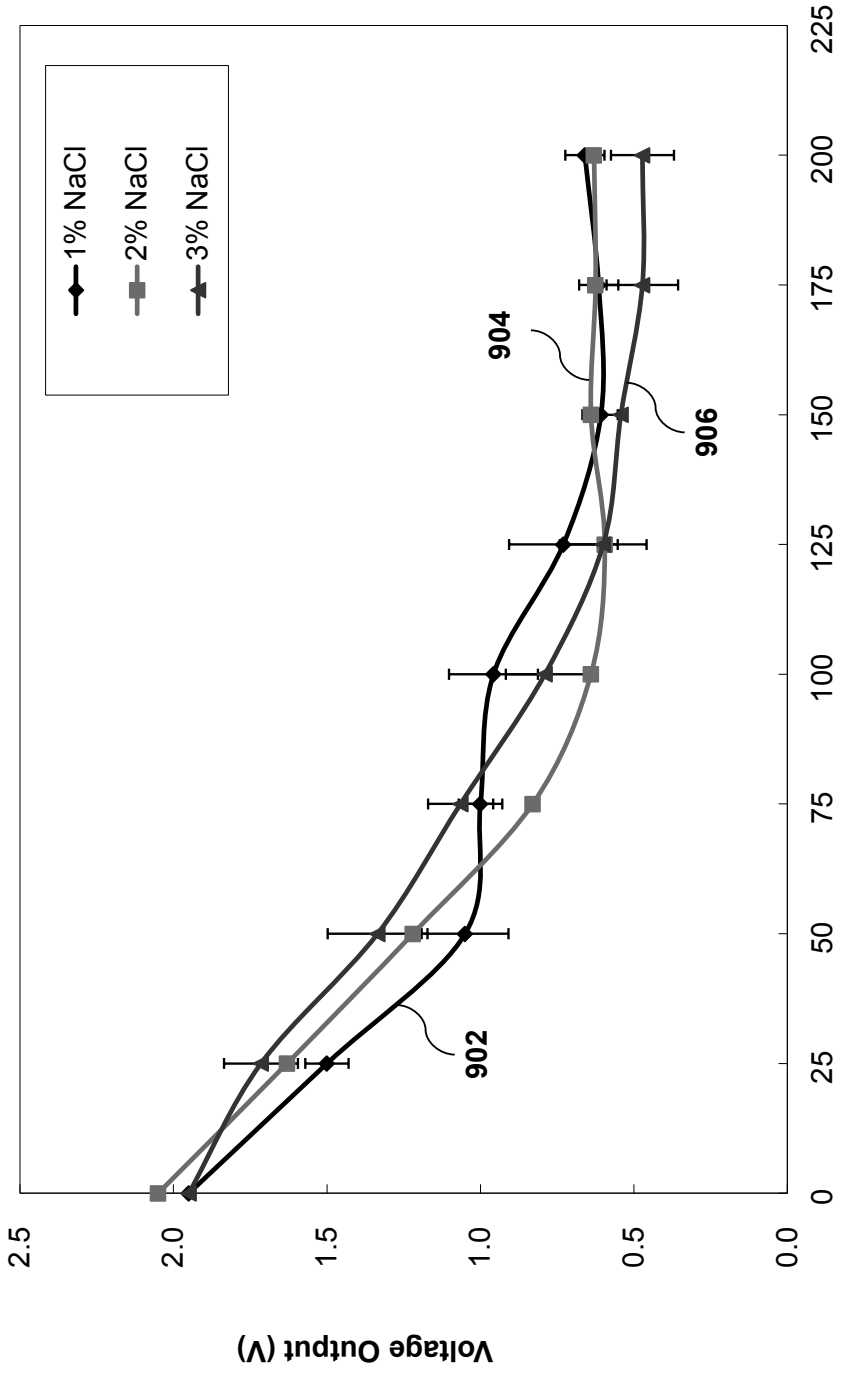
1% NaCl
2% NaCl
3% NaCl
902
904
906
Voltage Output (V)
Volume of Salt Solution Added (mL)
0.0
0.5
1.0
1.5
2.0
2.5
0
25
50
75
100
125
150
175
200
225

FIG. 9

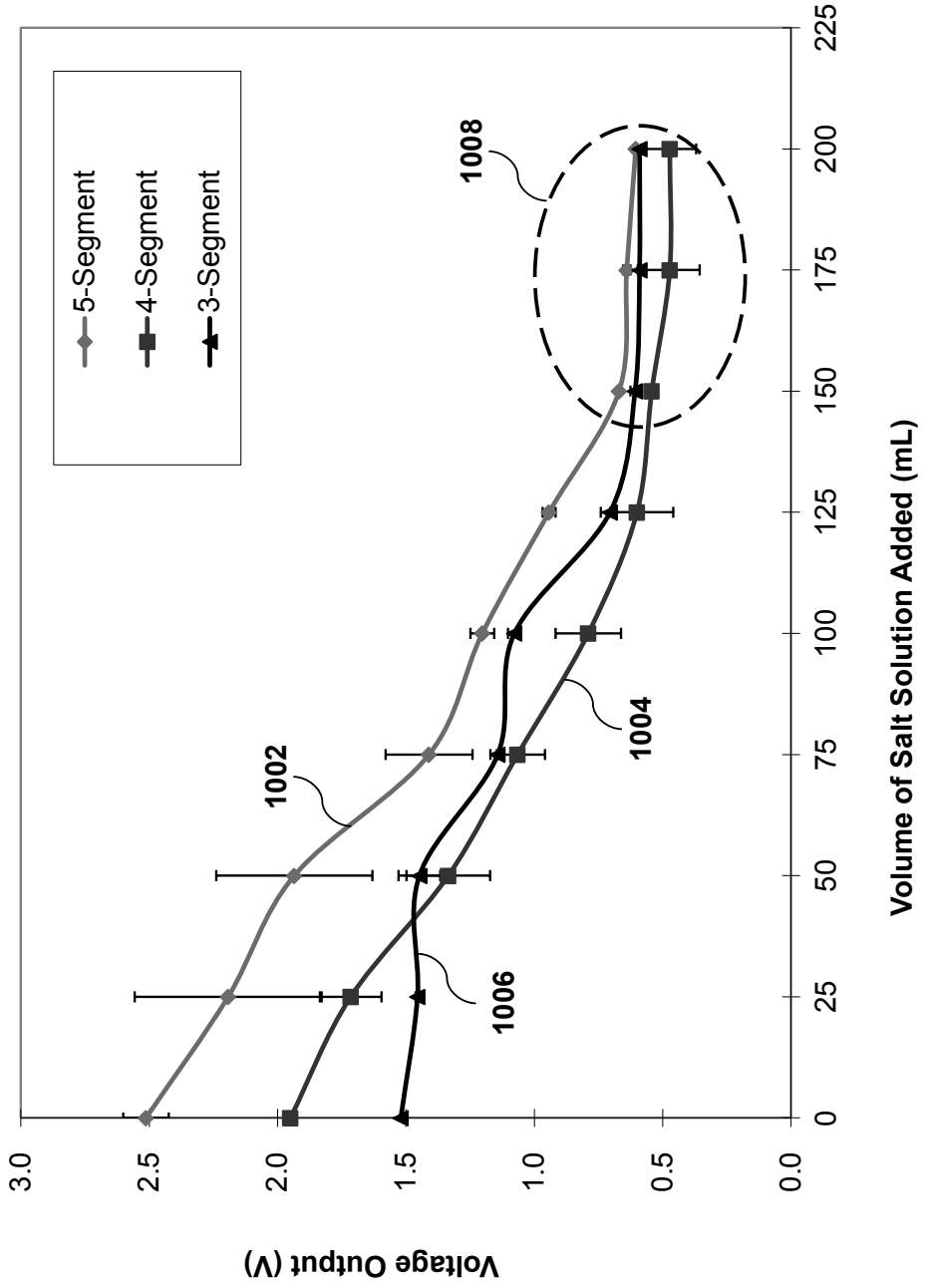
5-Segment
4-Segment
3-Segment
1002
1004
1006
1008
Voltage Output (V)
Volume of Salt Solution Added (mL)
0.0
0.5
1.0
1.5
2.0
2.5
3.0
0
25
50
75
100
125
150
175
200
225

FIG. 10

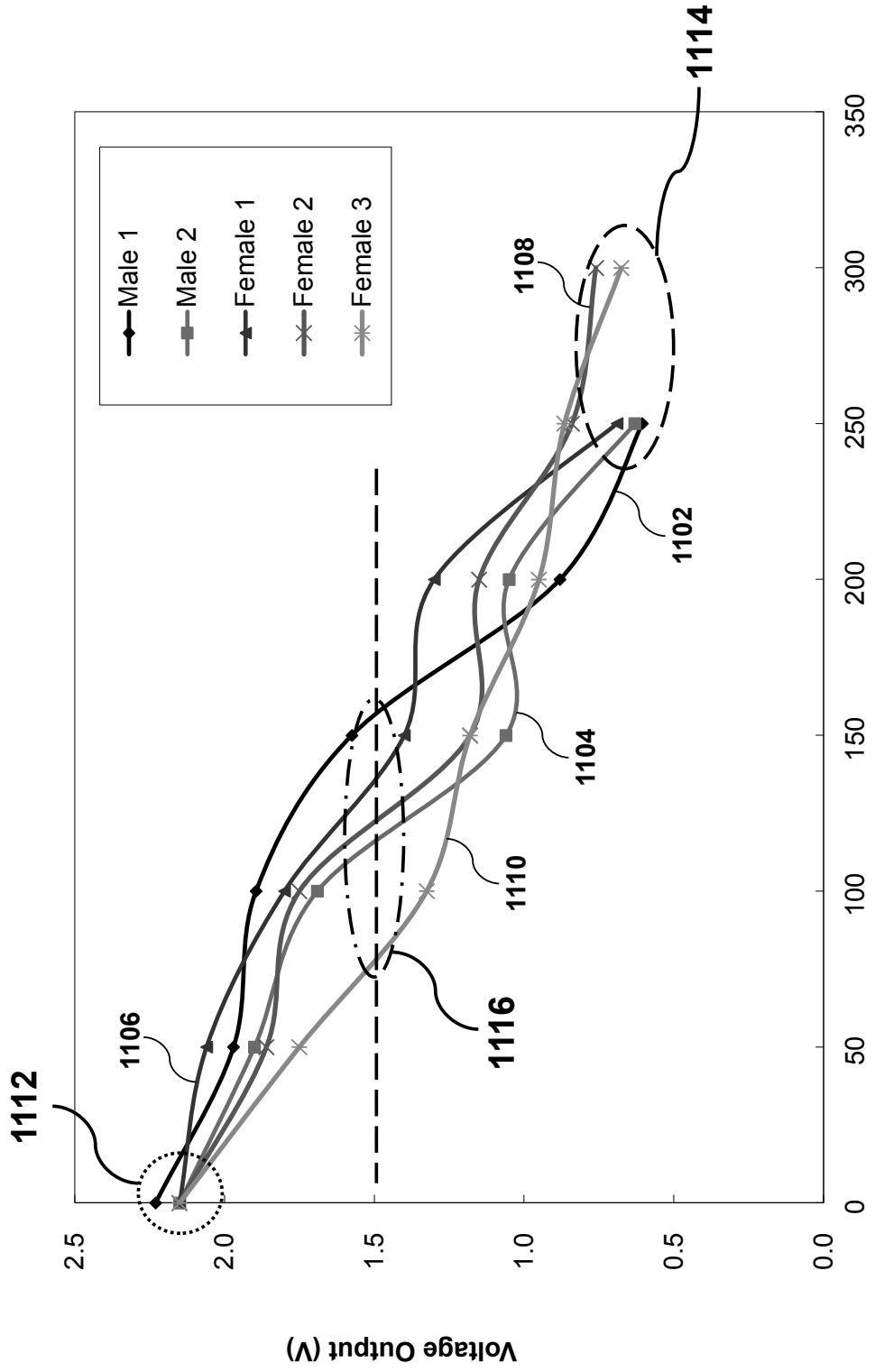
Male 1
Male 2
Female 1
Female 2
Female 3
1112
1106
1116
1110
1104
1102
1108
1114
Voltage Output (V)
Volume of Urine Added (mL)
0.0
0.5
1.0
1.5
2.0
2.5
0
50
100
150
200
250
300
350

FIG. 11