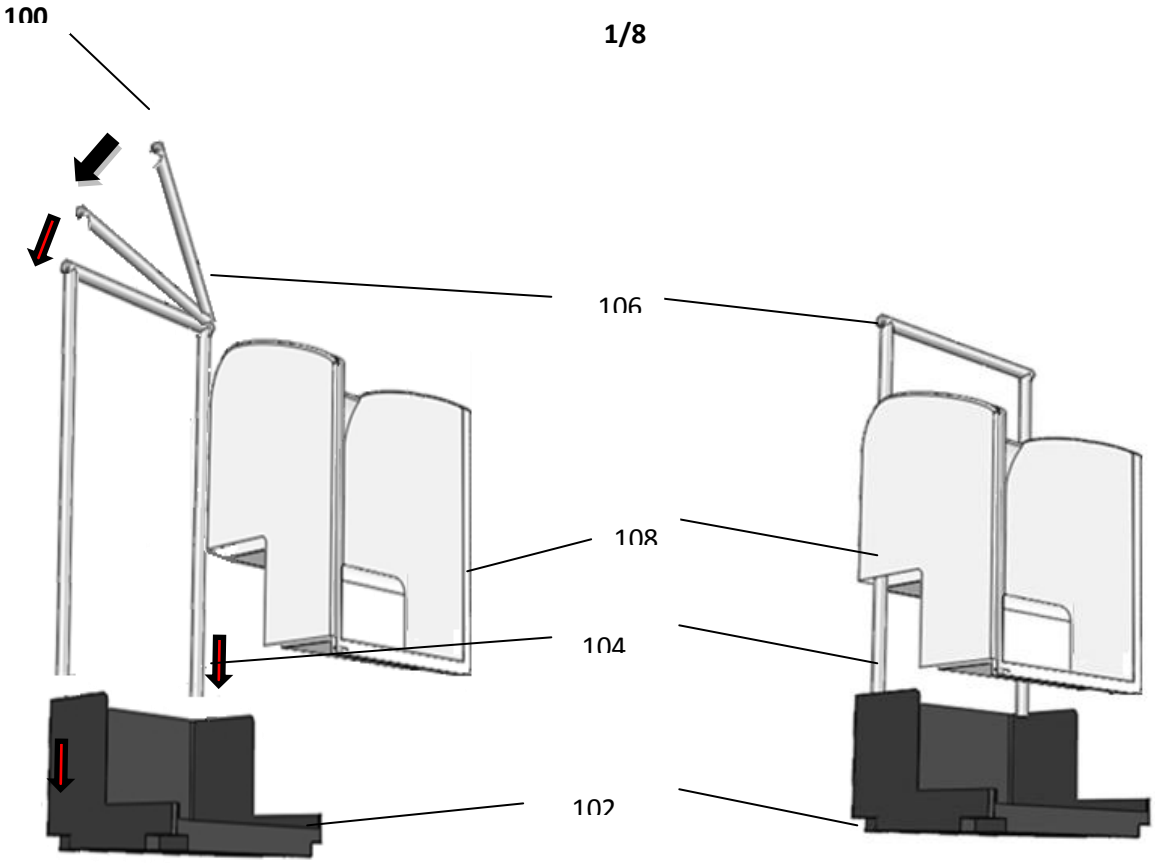

Figure 1

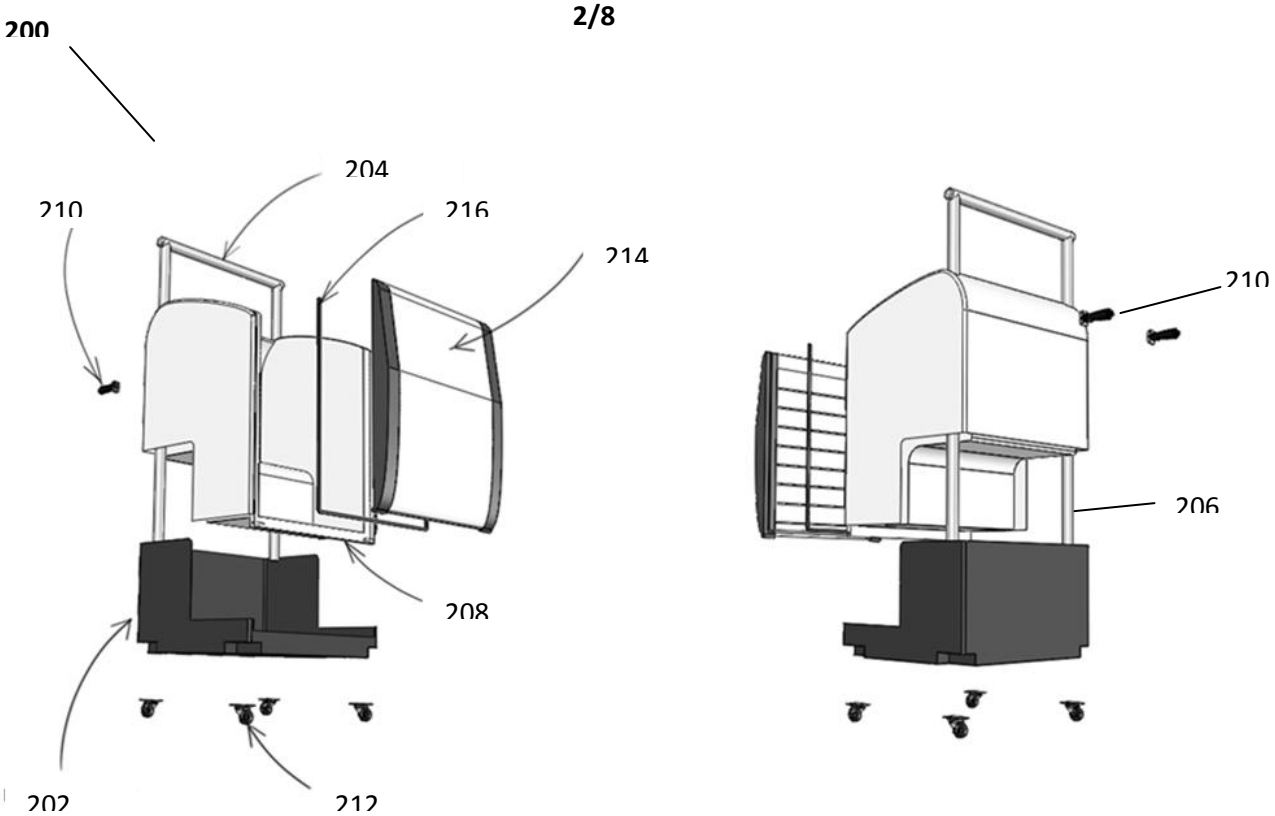

Figure 2

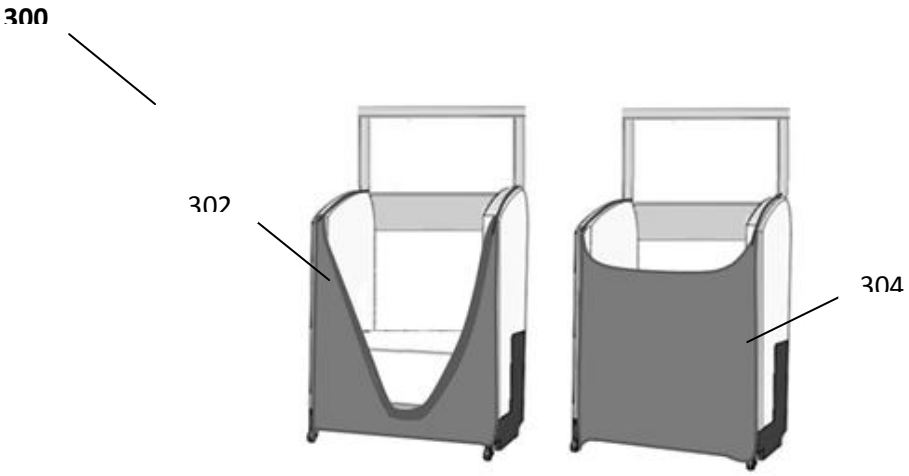

Figure 3a

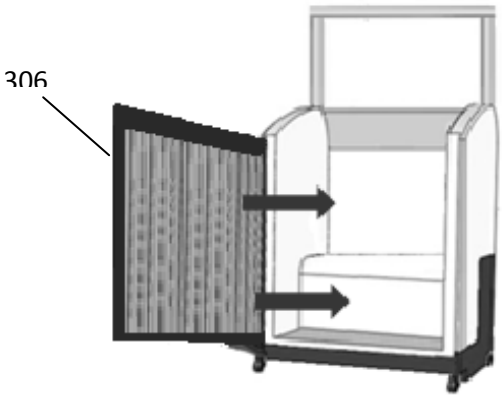

Figure 3b

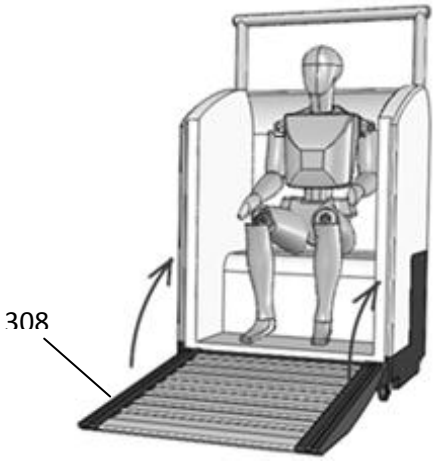

Figure 3c



Figure 3d

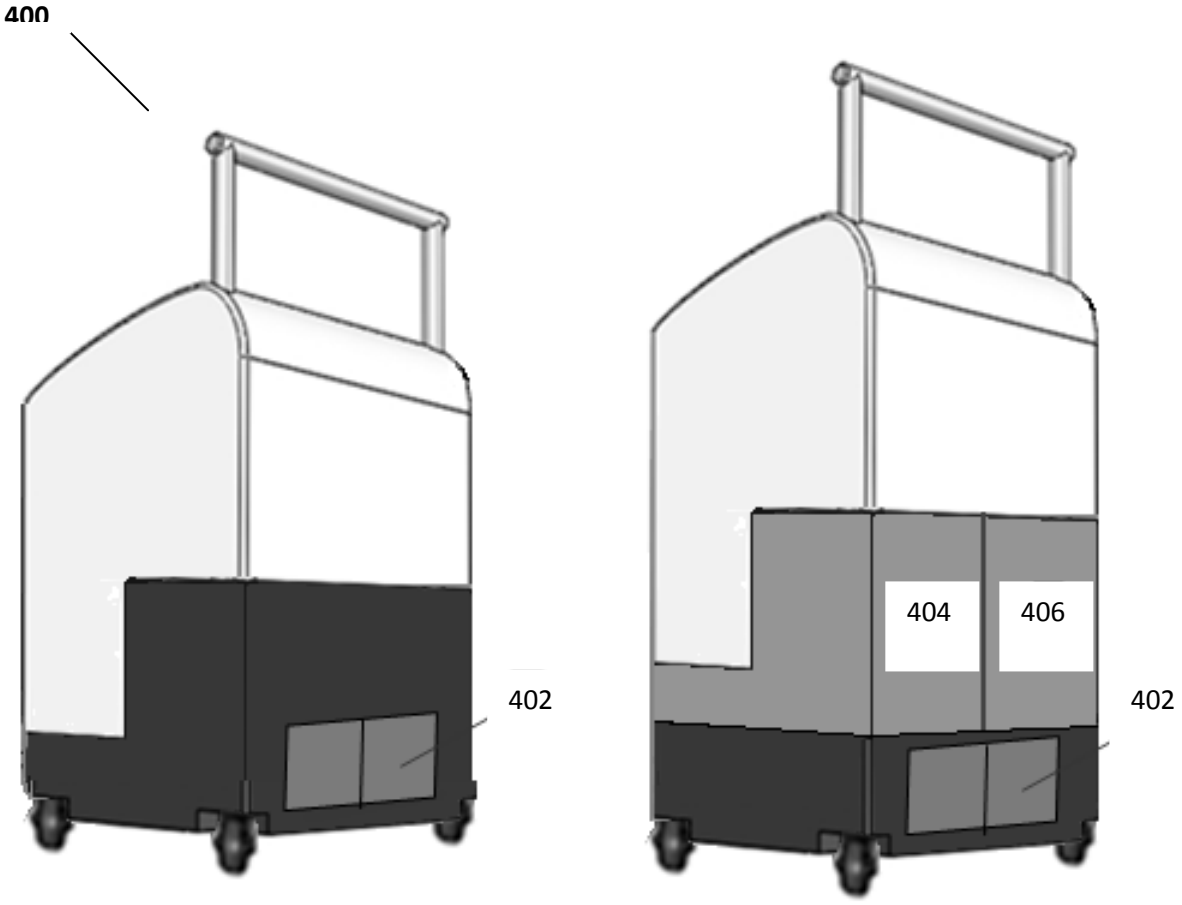

Figure 4

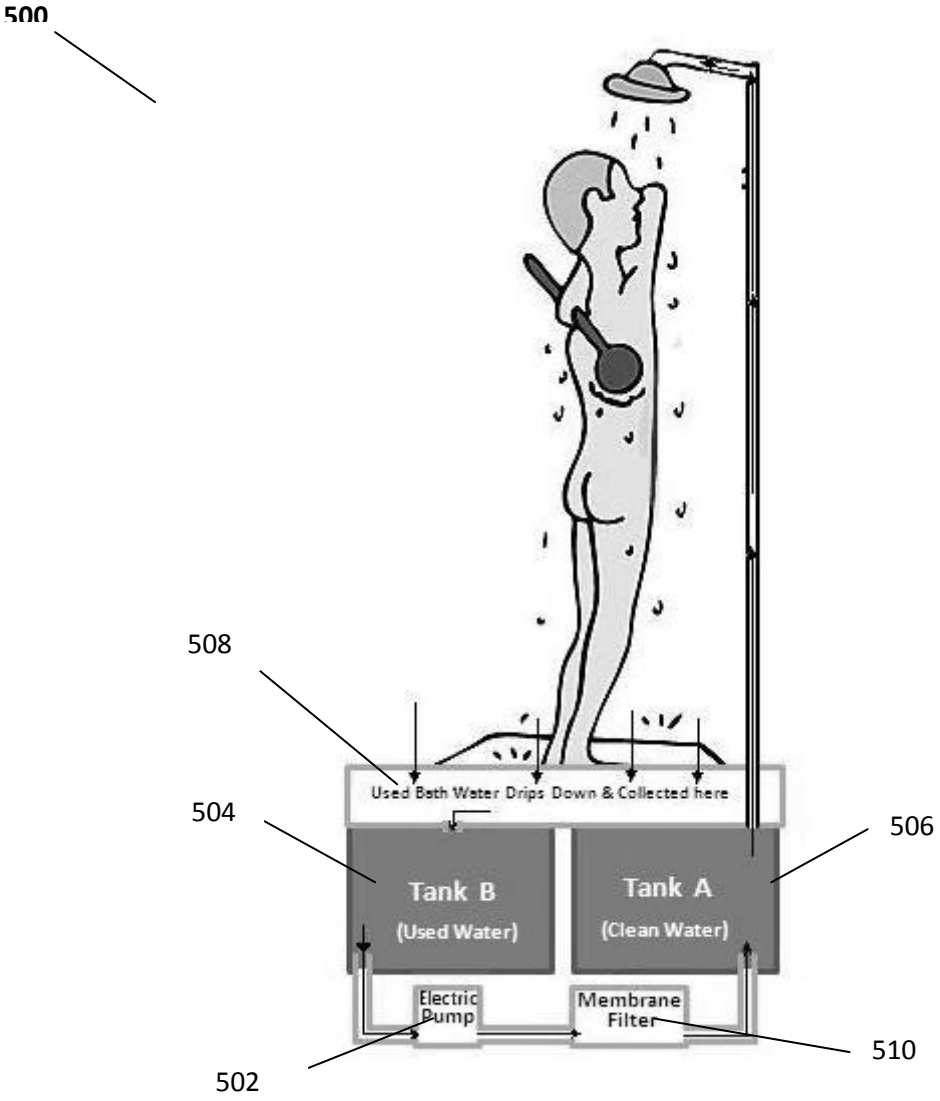
500
508
Used Bath Water Drips Down & Collected here
504
506
Tank B
(Used Water)
Tank A
(Clean Water)
Electric Pump
Membrane Filter
502
510

Figure 5

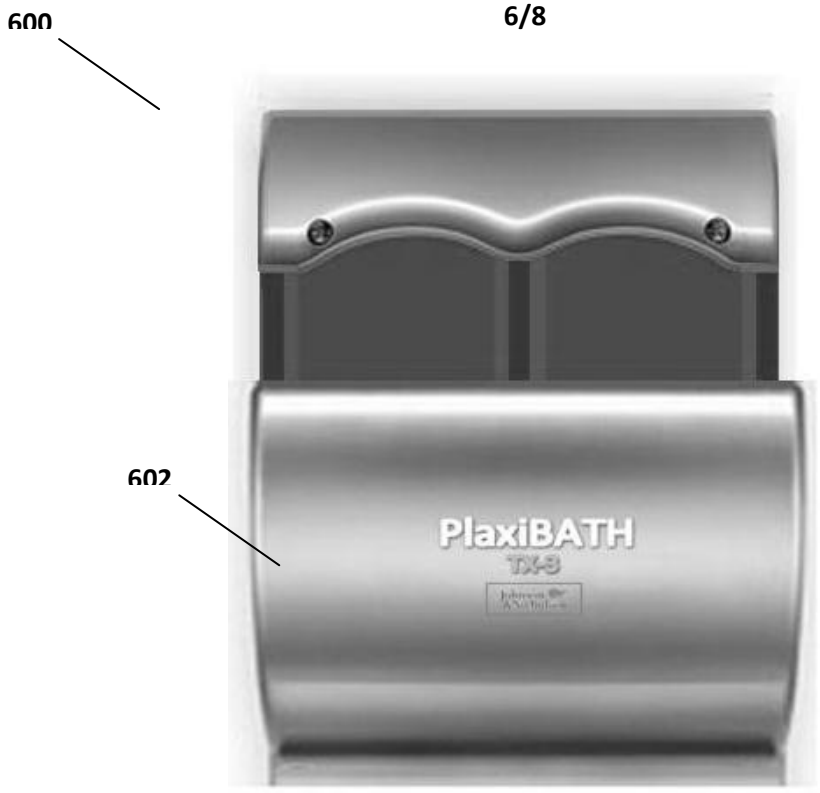

Figure 6



Figure 7a

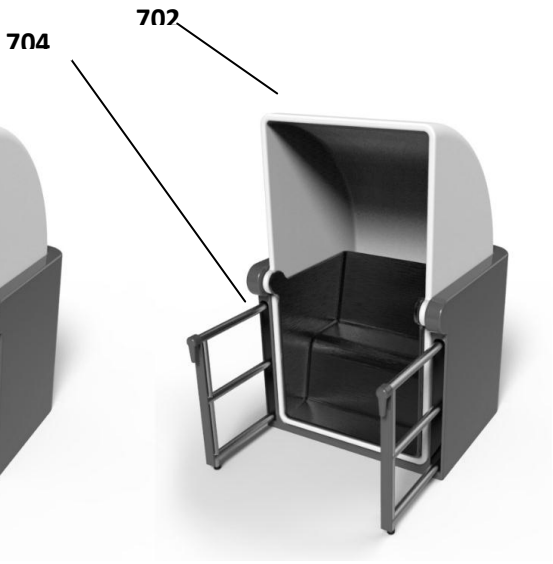

Figure 7b



Figure 7c

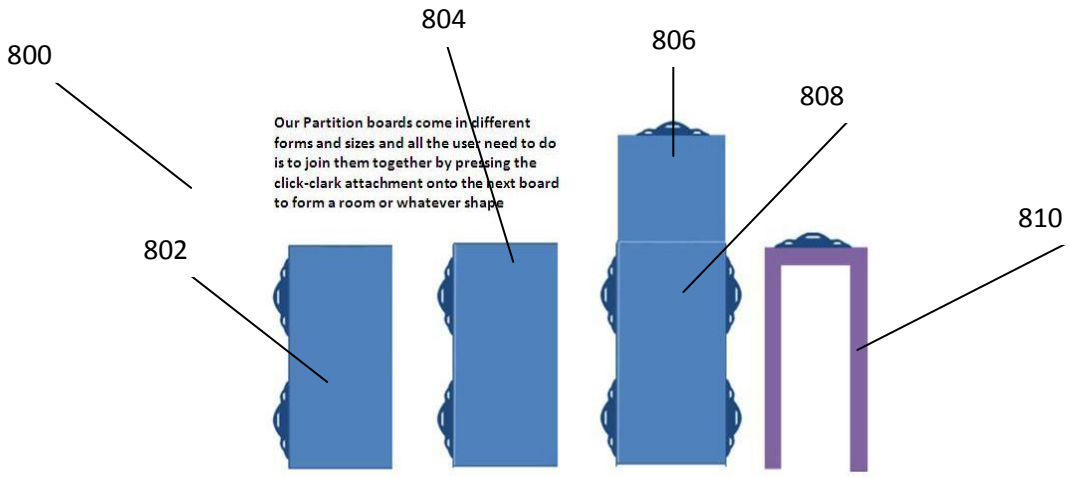

Figure 8a

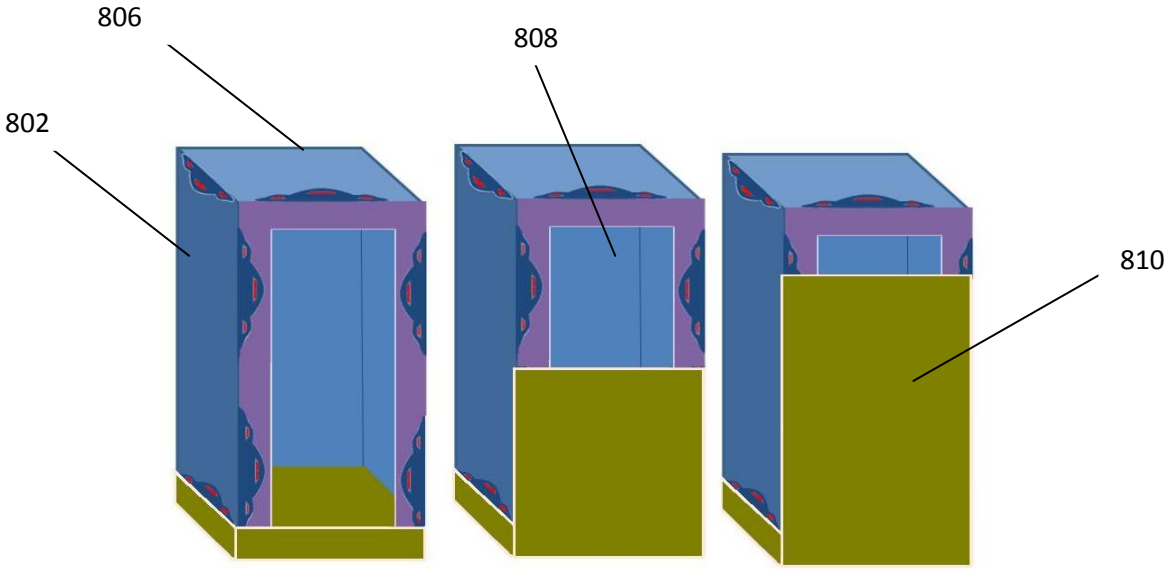

Figure 8b

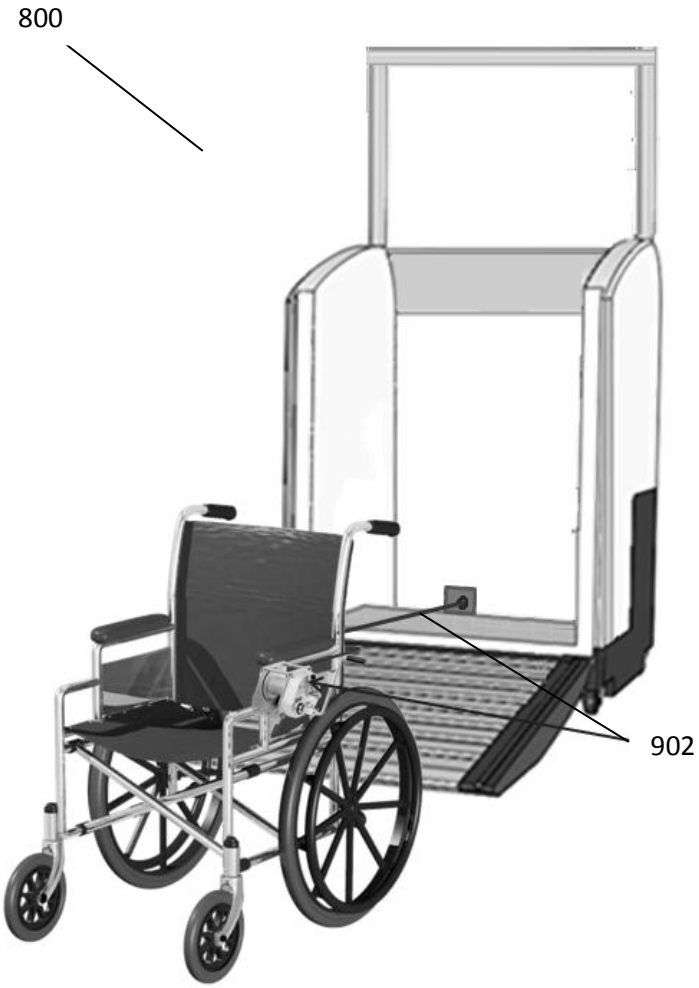

Figure 9