(12) INTERNATIONAL APPLICATION PUBLISHED UNDER THE PATENT COOPERATION TREATY (PCT)

(19) World Intellectual Property Organization
International Bureau

(43) International Publication Date
25 November 2004 (25.11.2004)

PCT

(10) International Publication Number
WO 2004/102518 A1

(51) International Patent Classification[7]: G09G 3/30, 3/36

(21) International Application Number:
PCT/JP2004/006926

(22) International Filing Date: 14 May 2004 (14.05.2004)

(25) Filing Language: English

(26) Publication Language: English

(30) Priority Data:
2003-139444 16 May 2003 (16.05.2003) JP

(71) Applicant *(for all designated States except US)*: **Toshiba Matsushita Display Technology Co., Ltd.** [JP/JP]; 1-8, Konan 4-chome, Minato-ku, Tokyo, 1080075 (JP).

(72) Inventor; and

(75) Inventor/Applicant *(for US only)*: **NAKATOGAWA, Hirondo** [JP/JP].

(74) Agents: **SUZUYE, Takehiko** et al.; c/o SUZUYE & SUZUYE, 7-2, Kasumigaseki 3-chome, Chiyoda-ku, Tokyo, 1000013 (JP).

(81) Designated States *(unless otherwise indicated, for every kind of national protection available)*: AE, AG, AL, AM, AT, AU, AZ, BA, BB, BG, BR, BW, BY, BZ, CA, CH, CN, CO, CR, CU, CZ, DE, DK, DM, DZ, EC, EE, EG, ES, FI, GB, GD, GE, GH, GM, HR, HU, ID, IL, IN, IS, KE, KG, KP, KR, KZ, LC, LK, LR, LS, LT, LU, LV, MA, MD, MG, MK, MN, MW, MX, MZ, NA, NI, NO, NZ, OM, PG, PH, PL, PT, RO, RU, SC, SD, SE, SG, SK, SL, SY, TJ, TM, TN, TR, TT, TZ, UA, UG, US, UZ, VC, VN, YU, ZA, ZM, ZW.

(84) Designated States *(unless otherwise indicated, for every kind of regional protection available)*: ARIPO (BW, GH, GM, KE, LS, MW, MZ, NA, SD, SL, SZ, TZ, UG, ZM, ZW), Eurasian (AM, AZ, BY, KG, KZ, MD, RU, TJ, TM), European (AT, BE, BG, CH, CY, CZ, DE, DK, EE, ES, FI, FR, GB, GR, HU, IE, IT, LU, MC, NL, PL, PT, RO, SE, SI,

[Continued on next page]

(54) Title: ACTIVE MATRIX TYPE DISPLAY APPARATUS

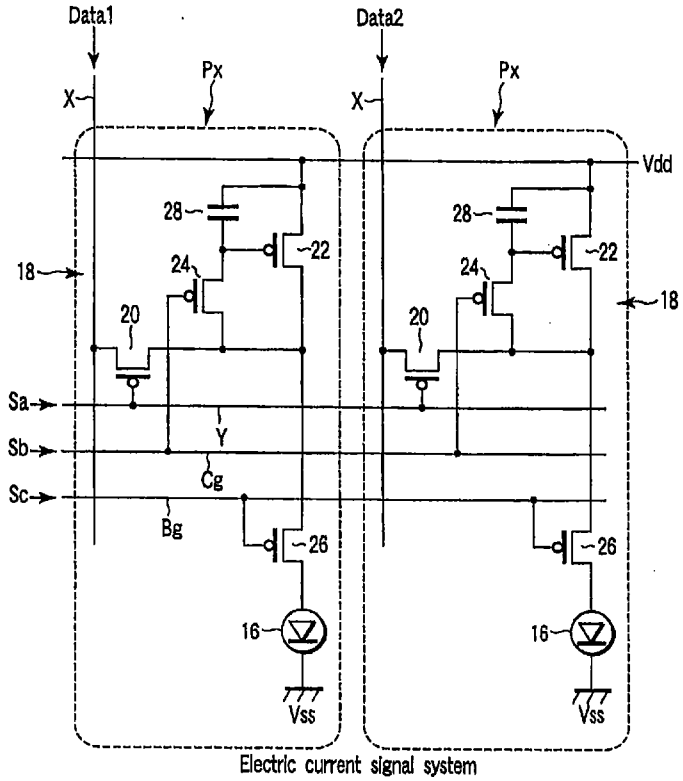

(57) Abstract: A plurality of display pixels arranged in a matrix form respectively have a self-luminescent element (16), a driving transistor (22) which controls an electric current amount made to flow in the self-luminescent element, in accordance with an image signal, and a switch (24) formed of a thin-film transistor and connected between a gate and a drain of the driving transistor. The switch is controlled to be turned on and off by a control signal Sb supplied via a scanning line Cg from a scanning line driving circuit. When the switch is in an ON-state, an electric potential of the control signal is varied in a stepwise manner so as to be close to an electric potential for making the switch be in an OFF-state.

WO 2004/102518 A1

162162

G00001

SK, TR), OAPI (BF, BJ, CF, CG, CI, CM, GA, GN, GQ, GW, ML, MR, NE, SN, TD, TG).

Published:

— *with international search report*

For two-letter codes and other abbreviations, refer to the "Guidance Notes on Codes and Abbreviations" appearing at the beginning of each regular issue of the PCT Gazette.