(12) INTERNATIONAL APPLICATION PUBLISHED UNDER THE PATENT COOPERATION TREATY (PCT)

(19) World Intellectual Property Organization
International Bureau

(43) International Publication Date
19 March 2009 (19.03.2009)

PCT

(10) International Publication Number
WO 2009/036197 A1

(51) International Patent Classification:
A47G 29/00 (2006.01) *A47B 73/00* (2006.01)

(21) International Application Number:
PCT/US2008/076053

(22) International Filing Date:
11 September 2008 (11.09.2008)

(25) Filing Language: English

(26) Publication Language: English

(30) Priority Data:
60/971,562 11 September 2007 (11.09.2007) US

(71) Applicant *(for all designated States except US)*: **LABCON, NORTH AMERICA** [US/US]; 3700 Lakeville Highway, Petaluma, CA 94954 (US).

(72) Inventors; and

(75) Inventors/Applicants *(for US only)*: **MOULTON, Thomas** [US/US]; 588 South Van Ness, Unit 5, San Francisco, CA 94110 (US). **MURRAY, Douglas** [US/US]; 36 Garner Drive, Novato, CA 94947 (US).

(74) Agent: **MARCUS, Brian, I.**; Vierra Magen Marcus & DeNiro, LLP, 575 Market Street, Suite 2500, San Francisco, CA 94105 (US).

(81) Designated States *(unless otherwise indicated, for every kind of national protection available)*: AE, AG, AL, AM, AO, AT, AU, AZ, BA, BB, BG, BH, BR, BW, BY, BZ, CA, CH, CN, CO, CR, CU, CZ, DE, DK, DM, DO, DZ, EC, EE, EG, ES, FI, GB, GD, GE, GH, GM, GT, HN, HR, HU, ID, IL, IN, IS, JP, KE, KG, KM, KN, KP, KR, KZ, LA, LC, LK, LR, LS, LT, LU, LY, MA, MD, ME, MG, MK, MN, MW, MX, MY, MZ, NA, NG, NI, NO, NZ, OM, PG, PH, PL, PT, RO, RS, RU, SC, SD, SE, SG, SK, SL, SM, ST, SV, SY, TJ, TM, TN, TR, TT, TZ, UA, UG, US, UZ, VC, VN, ZA, ZM, ZW.

(84) Designated States *(unless otherwise indicated, for every kind of regional protection available)*: ARIPO (BW, GH, GM, KE, LS, MW, MZ, NA, SD, SL, SZ, TZ, UG, ZM, ZW), Eurasian (AM, AZ, BY, KG, KZ, MD, RU, TJ, TM), European (AT, BE, BG, CH, CY, CZ, DE, DK, EE, ES, FI, FR, GB, GR, HR, HU, IE, IS, IT, LT, LU, LV, MC, MT, NL,

[Continued on next page]

(54) Title: RACK FOR HOLDING CENTRIFUGE TUBES

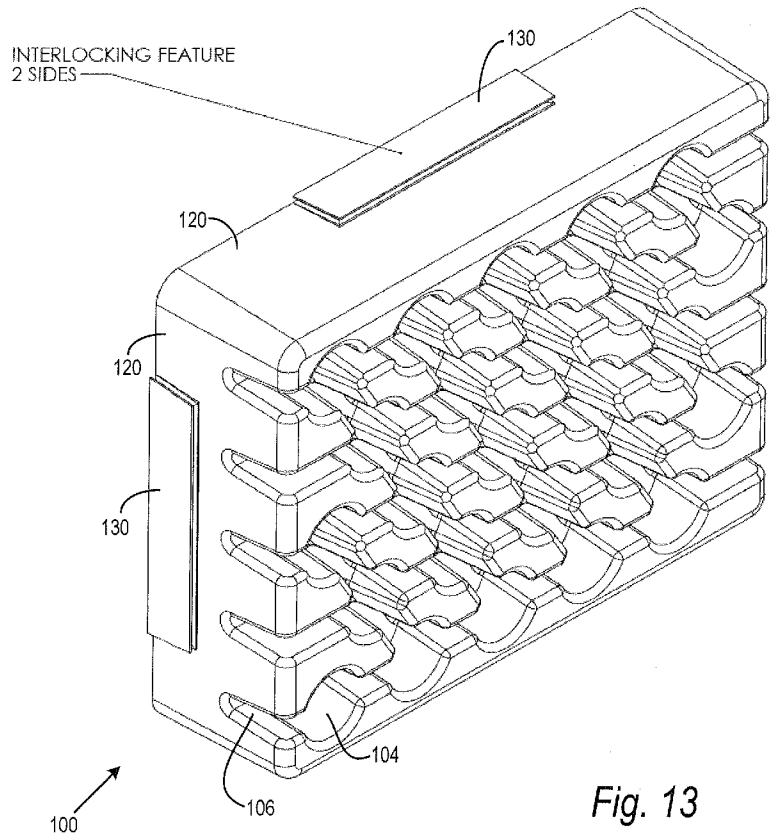

Fig. 13

(57) Abstract: A rack for centrifuge tubes is disclosed including a plurality of receptacles sized to snugly receive one of a variety of different diameter centrifuge tubes. The rack may be formed of a variety of biodegradable, compostable materials, including for example molded polypropylene or organic resins such as a corn-based resin or potato-based resin. The rack further includes a lattice of recesses defined within an upper surface of the rack, which recesses extend between and connect the receptacles to add rigidity to the rack and flexibility to the individual receptacles.

WO 2009/036197 A1

NO, PL, PT, RO, SE, SI, SK, TR), OAPI (BF, BJ, CF, CG, CI, CM, GA, GN, GQ, GW, ML, MR, NE, SN, TD, TG).

Published:
— *with international search report*