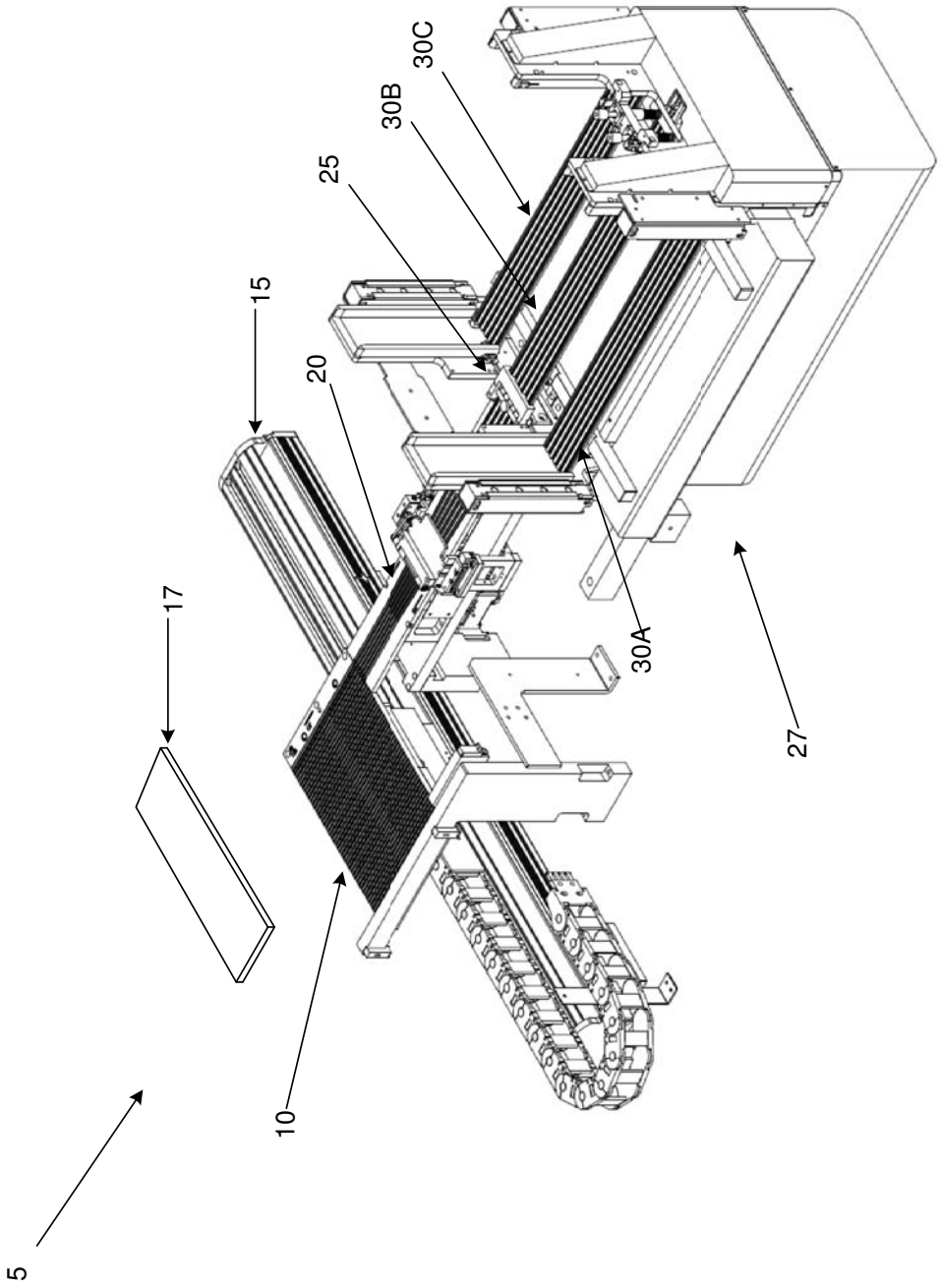

Figure 1

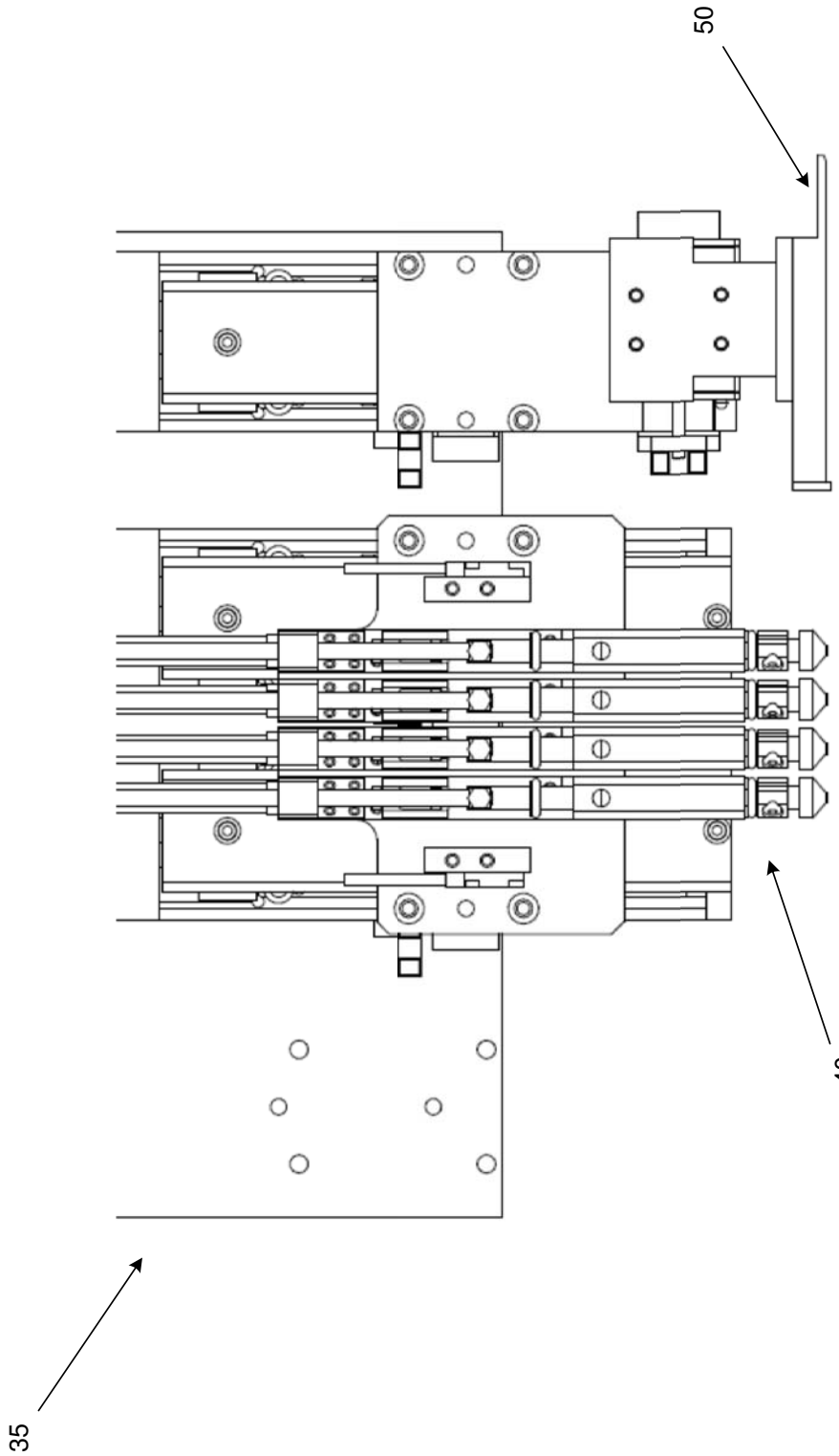

Figure 2A

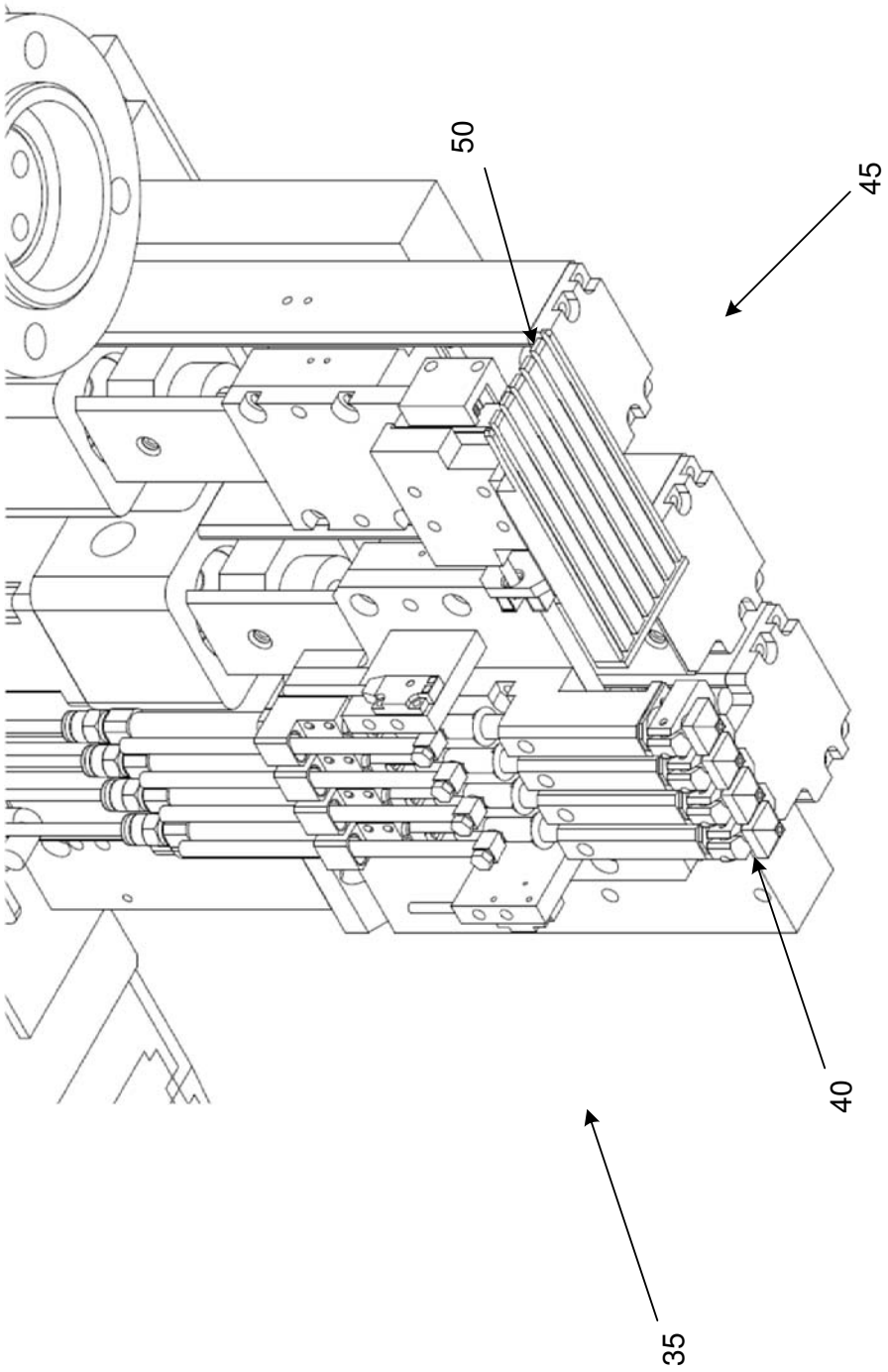

Figure 2B

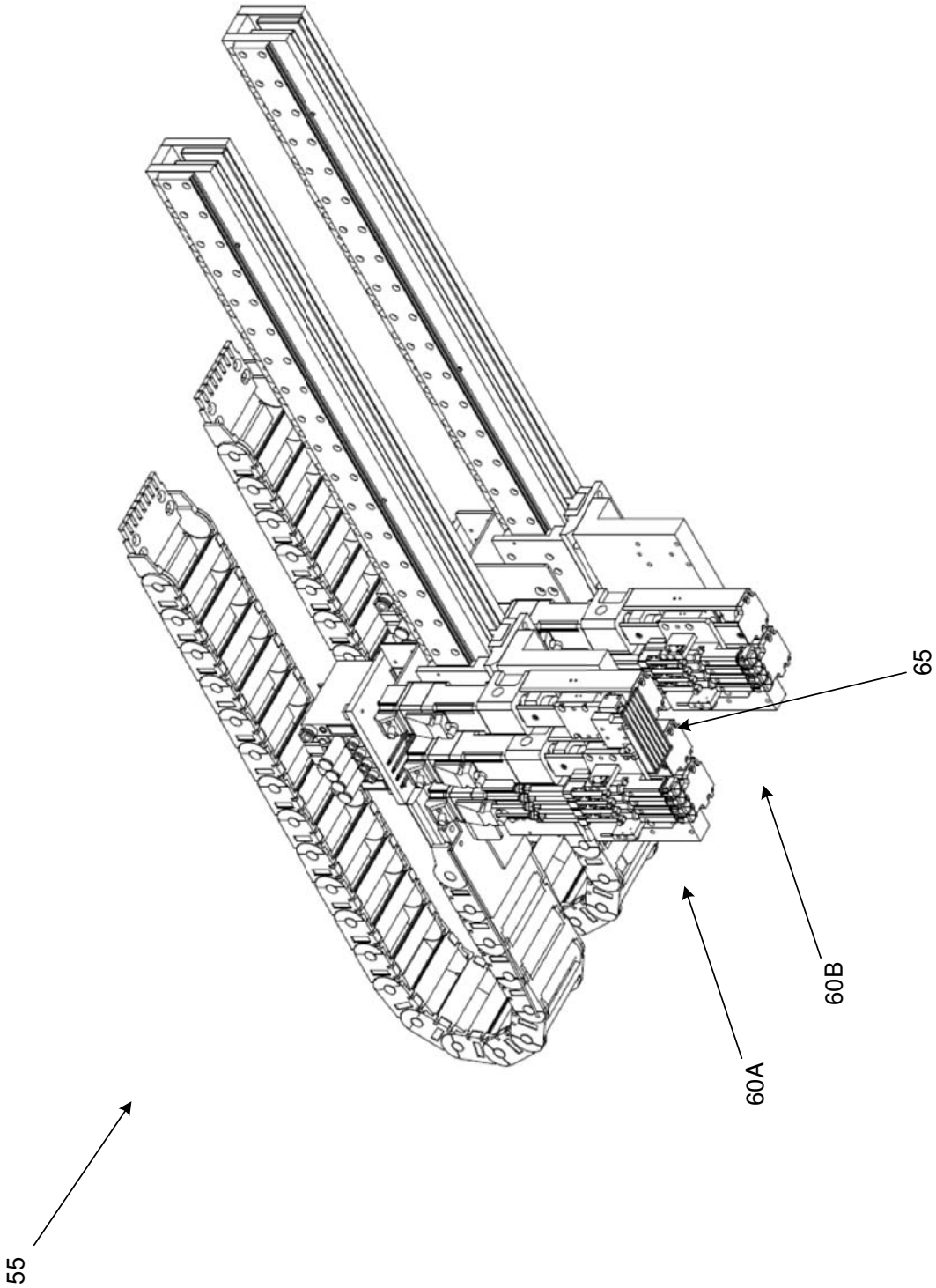

Figure 3

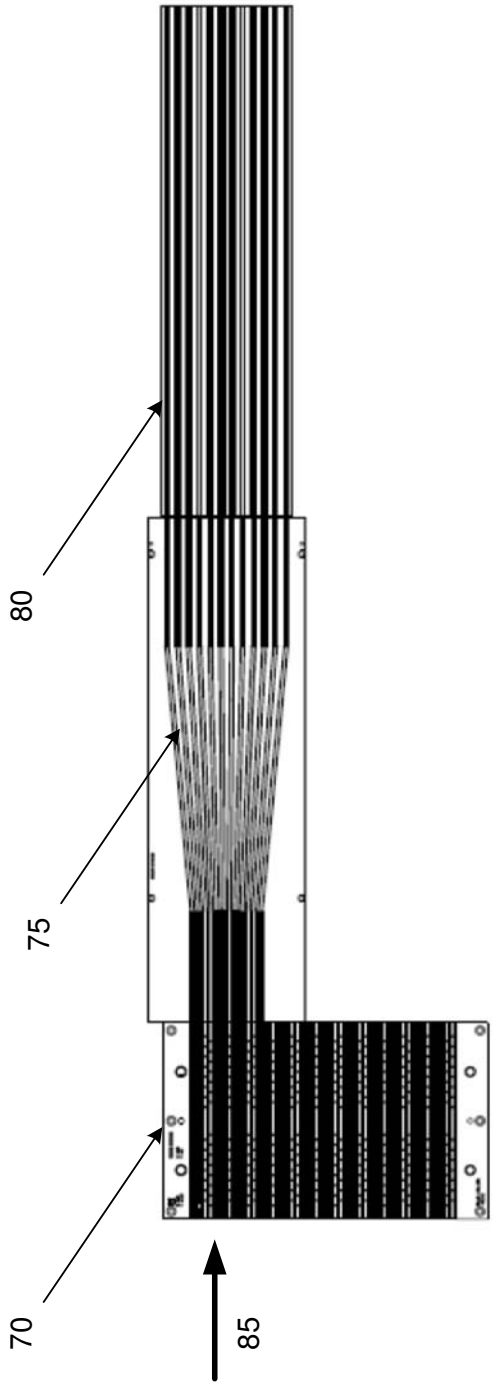

Figure 4

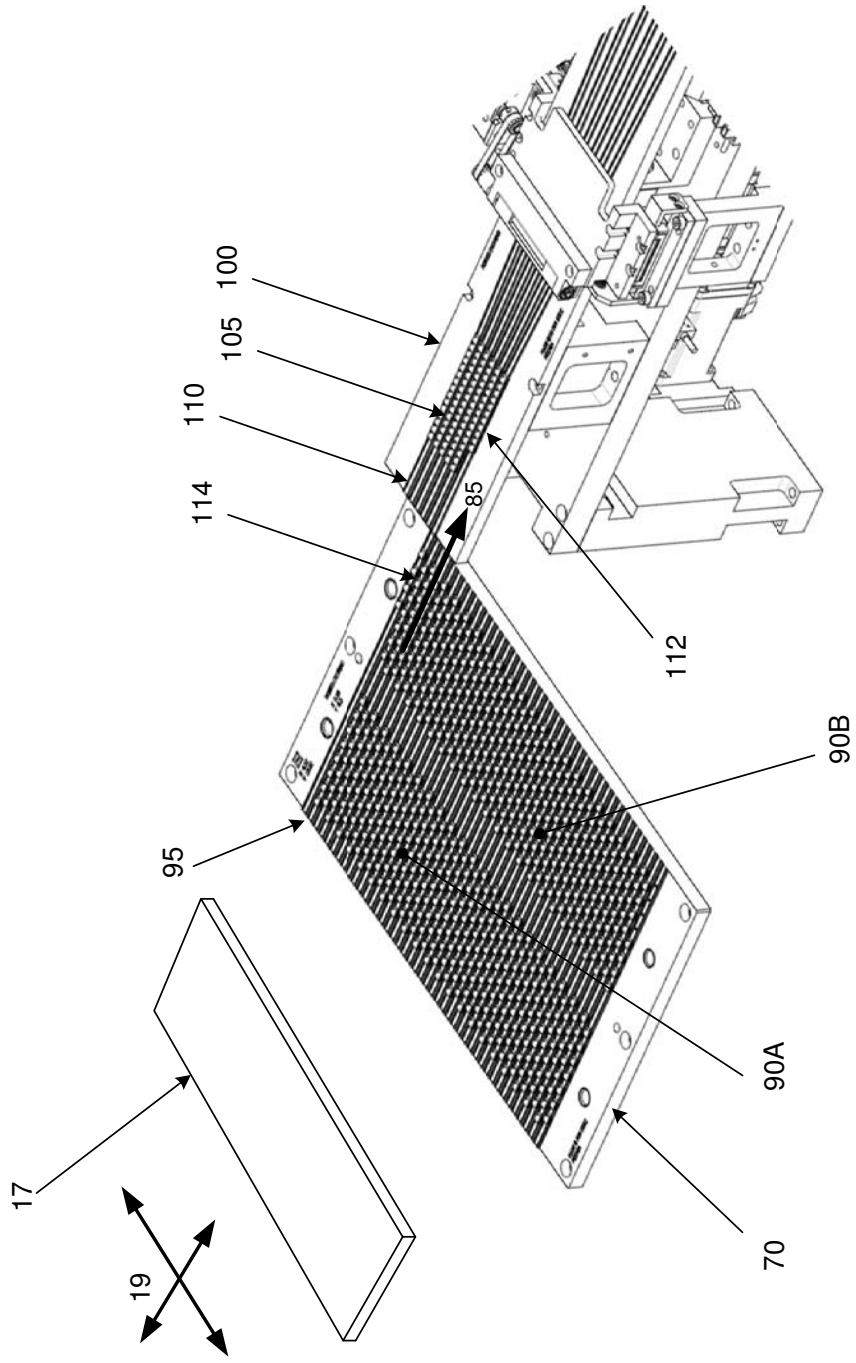

Figure 5A

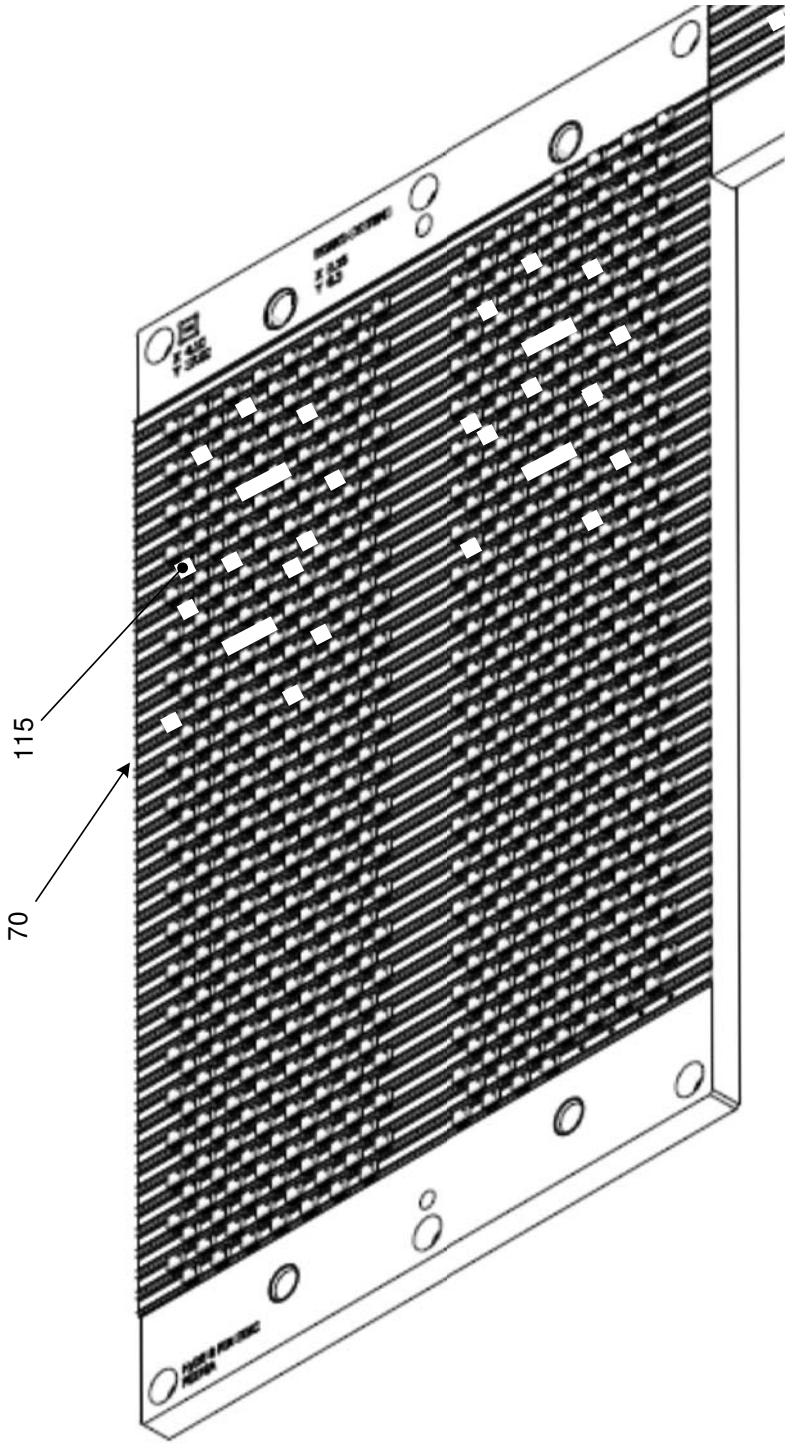

Figure 5B

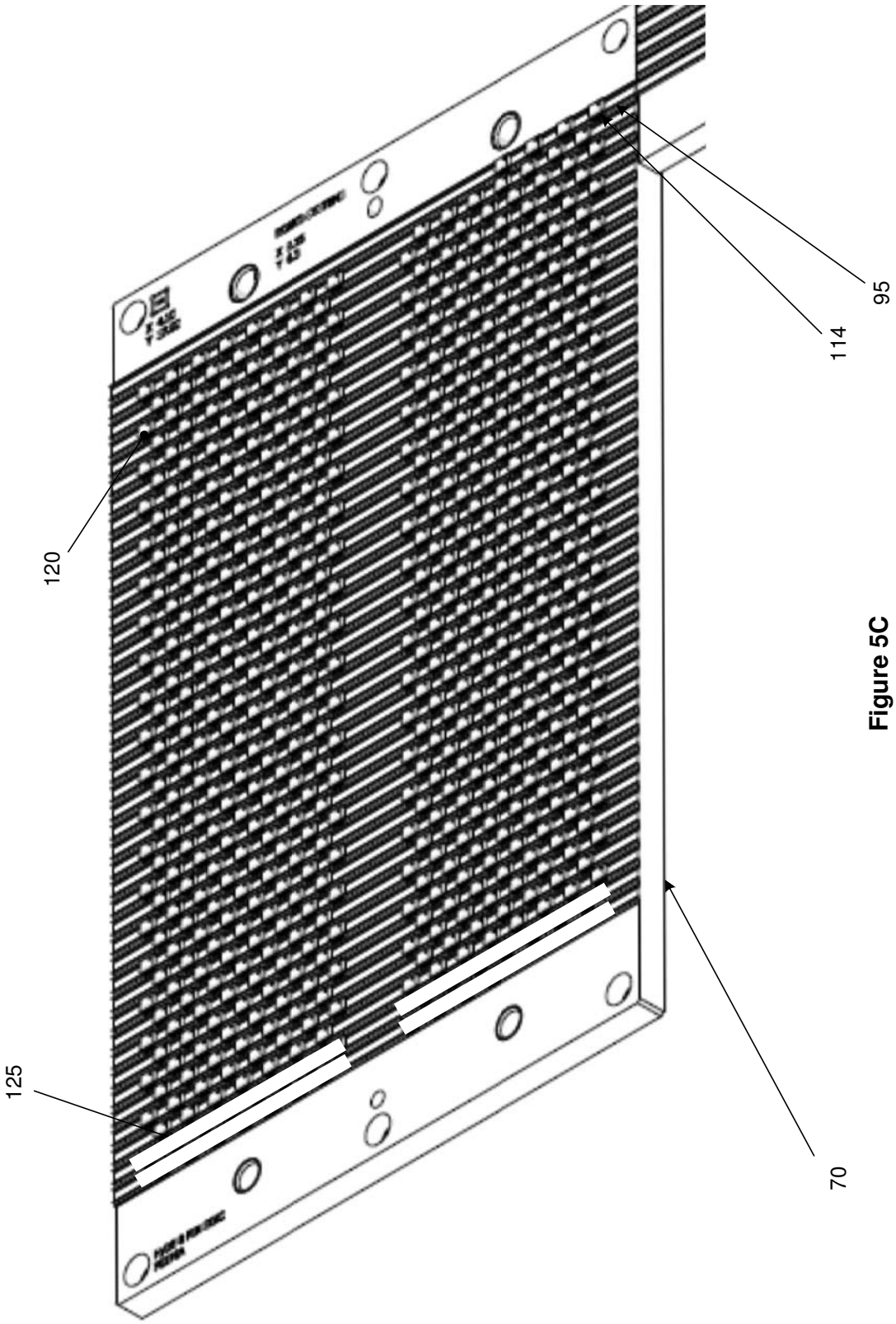

Figure 5C

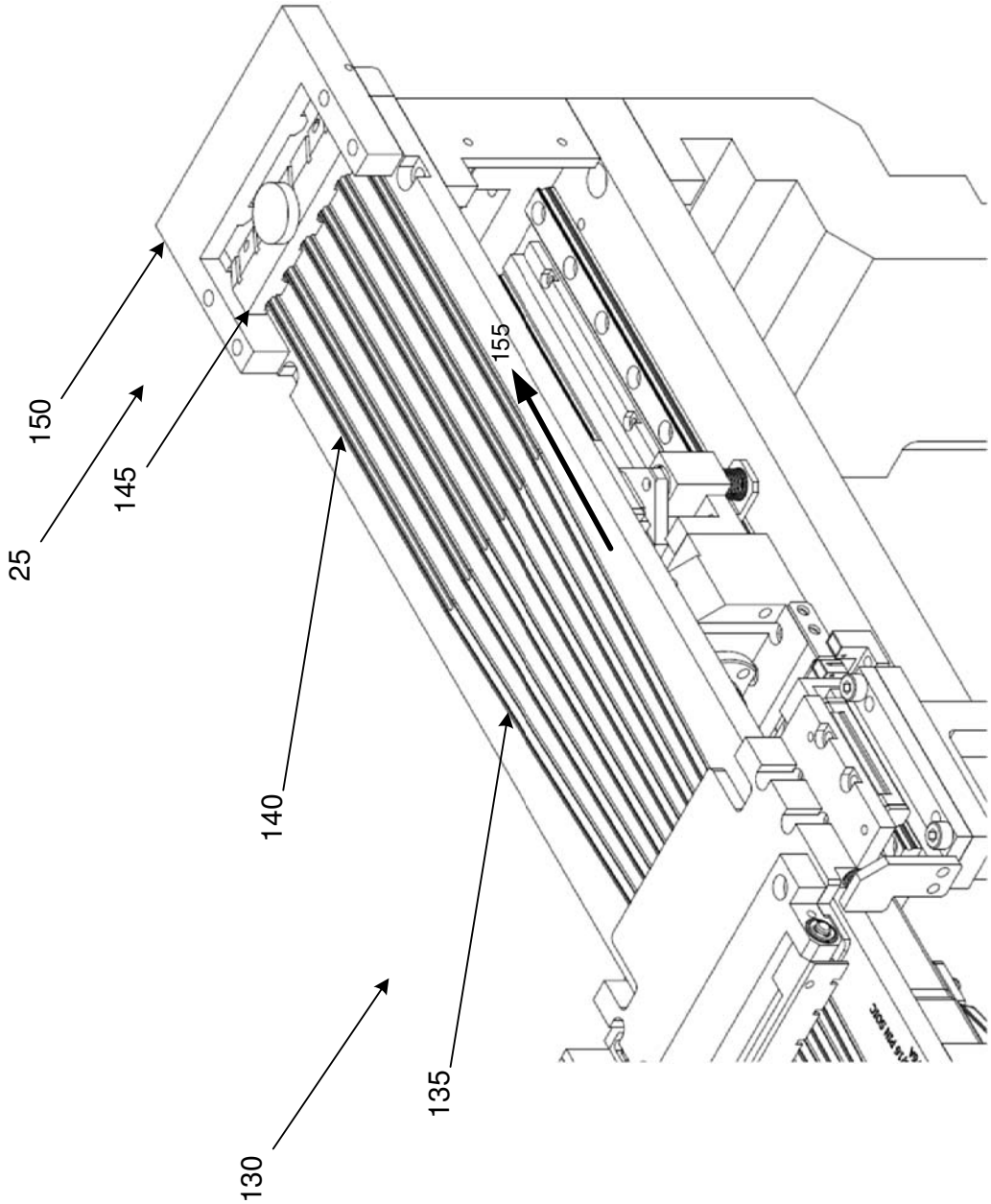

Figure 6A

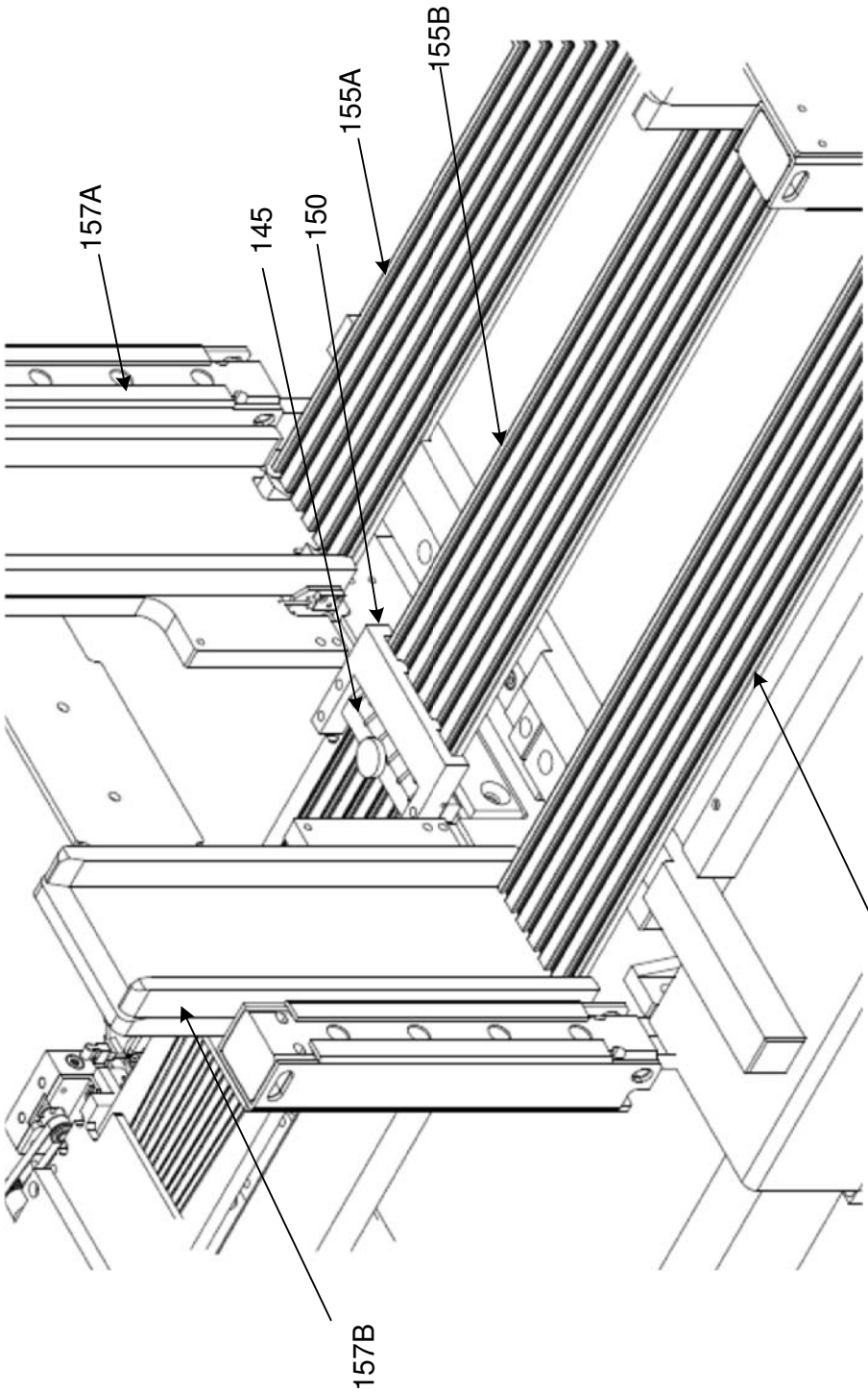

Figure 6B

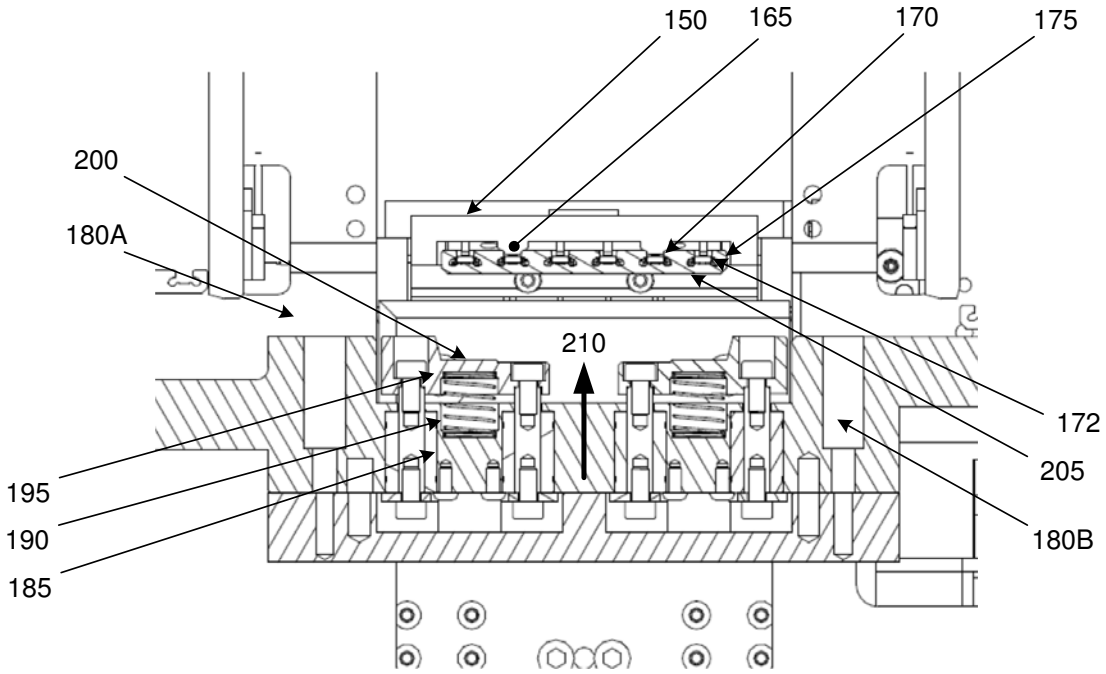

Figure 7A

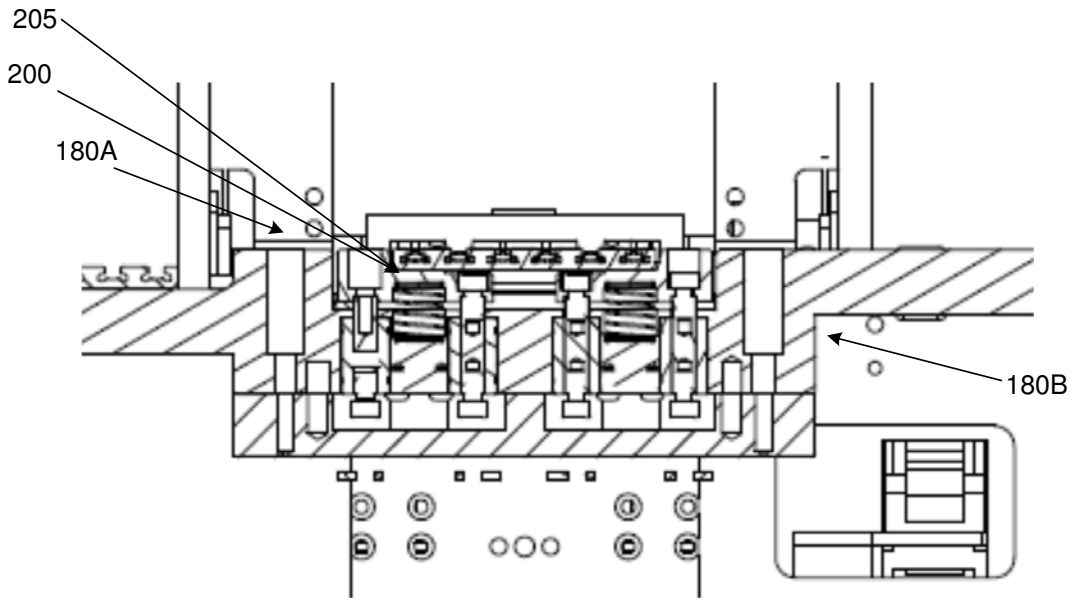

Figure 7B

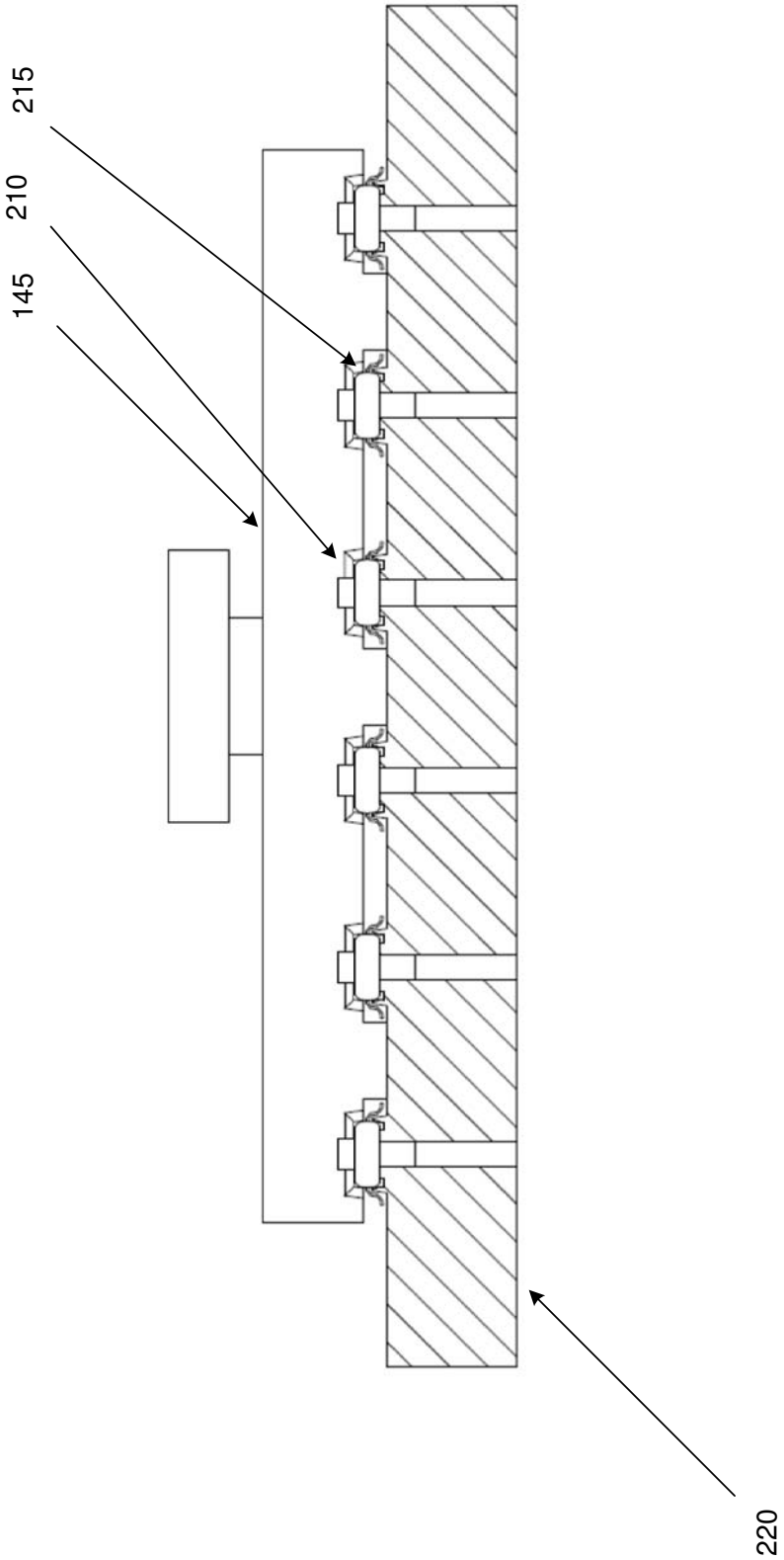

Figure 8

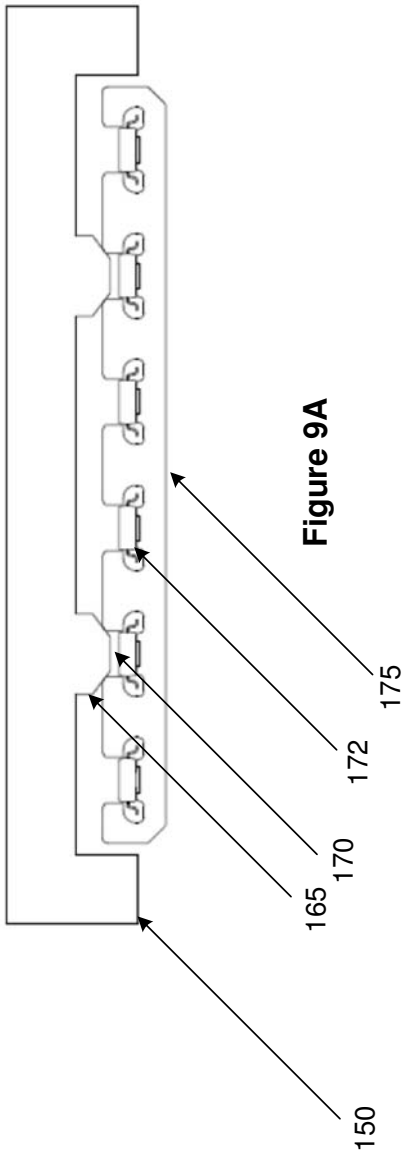

Figure 9A

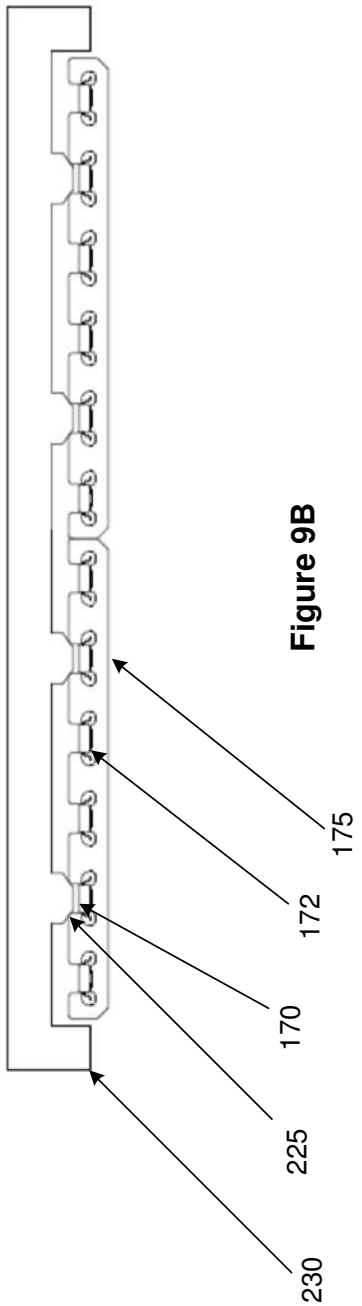

Figure 9B