(12) INTERNATIONAL APPLICATION PUBLISHED UNDER THE PATENT COOPERATION TREATY (PCT)

(19) World Intellectual Property Organization
International Bureau

(43) International Publication Date
25 November 2010 (25.11.2010)

PCT

(10) International Publication Number
WO 2010/134075 A1

(51) International Patent Classification:
G01C 11/02 (2006.01) *G01C 11/06* (2006.01)

(21) International Application Number:
PCT/IL2010/000401

(22) International Filing Date:
20 May 2010 (20.05.2010)

(25) Filing Language: English

(26) Publication Language: English

(30) Priority Data:
198883 21 May 2009 (21.05.2009) IL

(71) Applicant *(for all designated States except US)*: **ELTA SYSTEMS LTD.** [IL/IL]; 100 Yitzchak Hanassi Blvd., P.O.B. 330, 77102 Ashdod (IL).

(72) Inventors; and
(75) Inventors/Applicants *(for US only)*: **GOSTYNSKI, Victor** [IL/IL]; 38 Methada Street, 77711 Ashdod (IL). **LUBIN, Dror** [IL/IL]; 10 Toledano Street, Tel Aviv (IL).

(74) Agent: **REINHOLD COHN AND PARTNERS**; P.O.B.13239, 61131 Tel Aviv (IL).

(81) Designated States *(unless otherwise indicated, for every kind of national protection available)*: AE, AG, AL, AM, AO, AT, AU, AZ, BA, BB, BG, BH, BR, BW, BY, BZ, CA, CH, CL, CN, CO, CR, CU, CZ, DE, DK, DM, DO, DZ, EC, EE, EG, ES, FI, GB, GD, GE, GH, GM, GT, HN, HR, HU, ID, IL, IN, IS, JP, KE, KG, KM, KN, KP, KR, KZ, LA, LC, LK, LR, LS, LT, LU, LY, MA, MD, ME, MG, MK, MN, MW, MX, MY, MZ, NA, NG, NI, NO, NZ, OM, PE, PG, PH, PL, PT, RO, RS, RU, SC, SD, SE, SG, SK, SL, SM, ST, SV, SY, TH, TJ, TM, TN, TR, TT, TZ, UA, UG, US, UZ, VC, VN, ZA, ZM, ZW.

(84) Designated States *(unless otherwise indicated, for every kind of regional protection available)*: ARIPO (BW, GH, GM, KE, LR, LS, MW, MZ, NA, SD, SL, SZ, TZ, UG, ZM, ZW), Eurasian (AM, AZ, BY, KG, KZ, MD, RU, TJ, TM), European (AL, AT, BE, BG, CH, CY, CZ, DE, DK, EE, ES, FI, FR, GB, GR, HR, HU, IE, IS, IT, LT, LU, LV, MC, MK, MT, NL, NO, PL, PT, RO, SE, SI, SK, SM, TR), OAPI (BF, BJ, CF, CG, CI, CM, GA, GN, GQ, GW, ML, MR, NE, SN, TD, TG).

Published:

— *with international search report (Art. 21(3))*

— *before the expiration of the time limit for amending the claims and to be republished in the event of receipt of amendments (Rule 48.2(h))*

(54) **Title**: METHOD AND SYSTEM FOR STEREOSCOPIC SCANNING

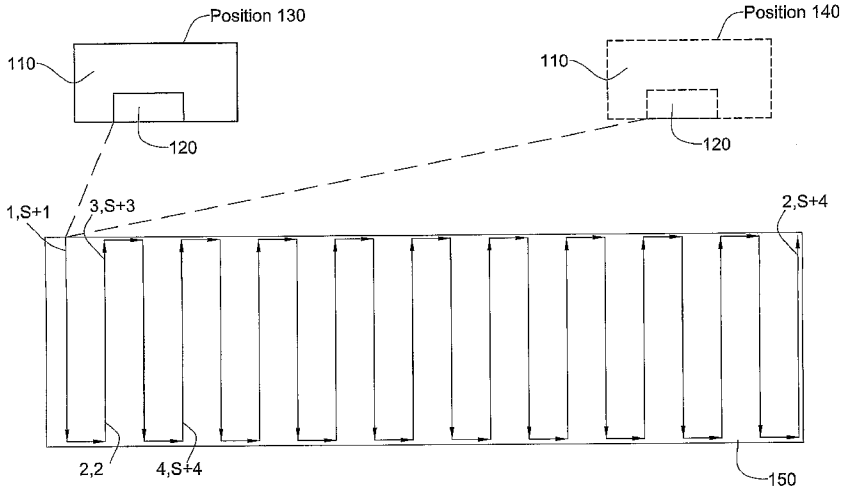

FIG. 1

(57) **Abstract**: A system and methods for scanning frames in a target area, this system being used for producing a stereoscopic view of a target area, wherein for a set of captured frames, an attitude of the camera is not adjusted by more than the field of view between two consecutive frames,- and wherein the camera is configured to complete the capturing of the set, and then repeat the capture of this set, prior to capturing any additional set.

WO 2010/134075 A1