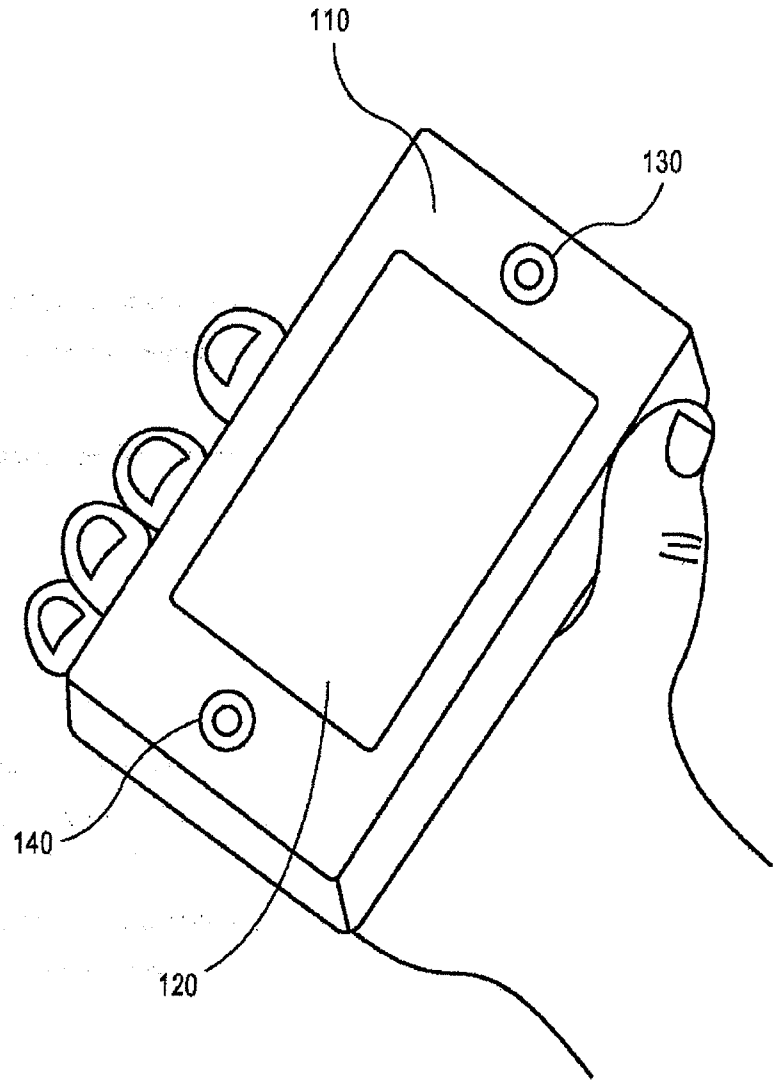

FIG. 1

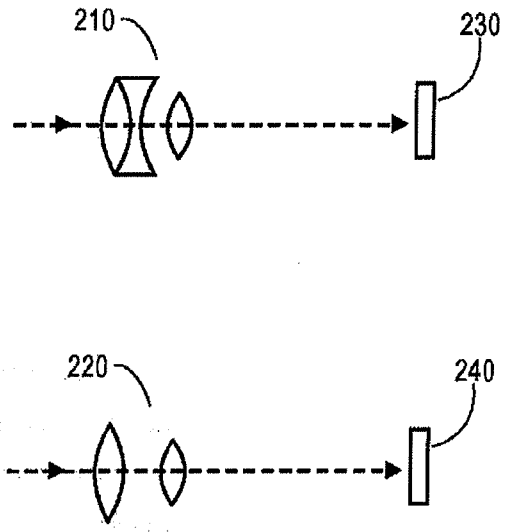

FIG. 2A

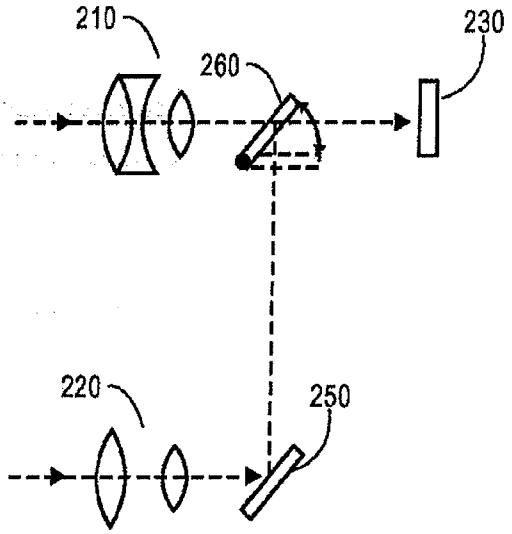

FIG. 2B

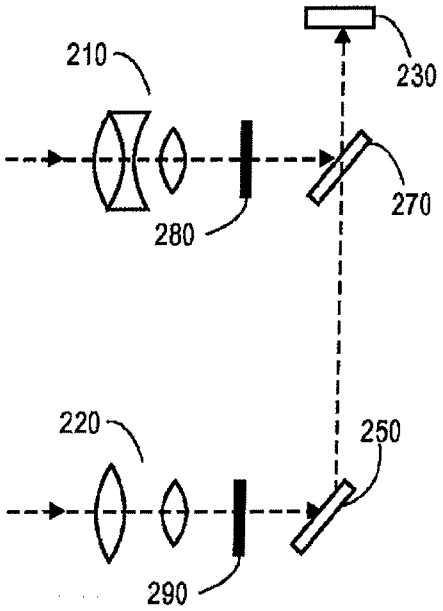

FIG. 2C

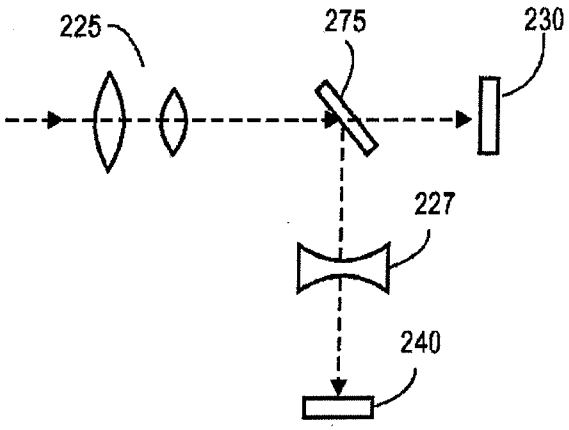

FIG. 2D

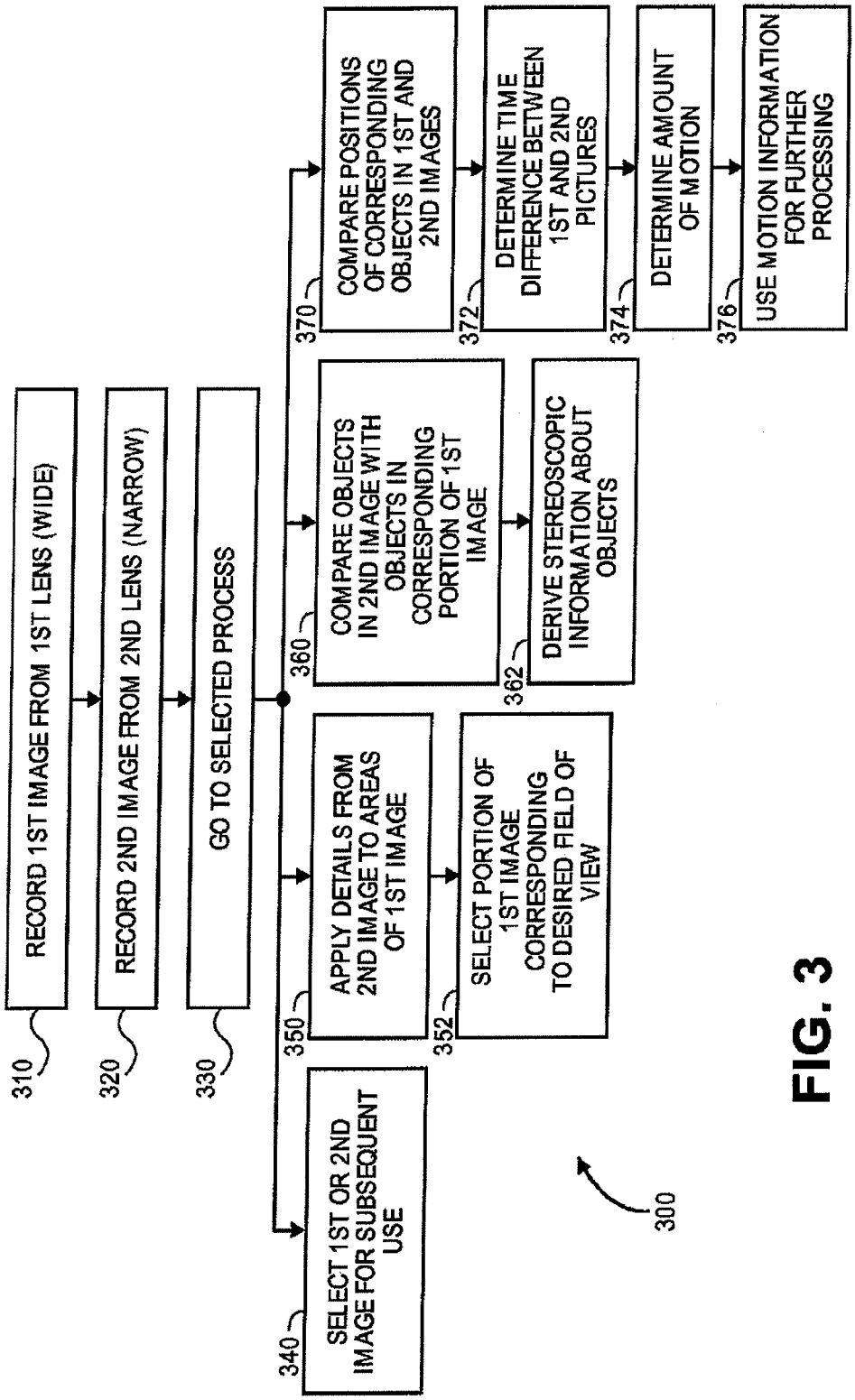
RECORD 1ST IMAGE FROM 1ST LENS (WIDE)
RECORD 2ND IMAGE FROM 2ND LENS (NARROW)
GO TO SELECTED PROCESS
SELECT 1ST OR 2ND IMAGE FOR SUBSEQUENT USE
APPLY DETAILS FROM 2ND IMAGE TO AREAS OF 1ST IMAGE
SELECT PORTION OF 1ST IMAGE CORRESPONDING TO DESIRED FIELD OF VIEW
COMPARE OBJECTS IN 2ND IMAGE WITH OBJECTS IN CORRESPONDING PORTION OF 1ST IMAGE
DERIVE STEREOSCOPIC INFORMATION ABOUT OBJECTS
COMPARE POSITIONS OF CORRESPONDING OBJECTS IN 1ST AND 2ND IMAGES
DETERMINE TIME DIFFERENCE BETWEEN 1ST AND 2ND PICTURES
DETERMINE AMOUNT OF MOTION
USE MOTION INFORMATION FOR FURTHER PROCESSING
310
320
330
340
350
352
360
362
370
372
374
376
300

FIG. 3

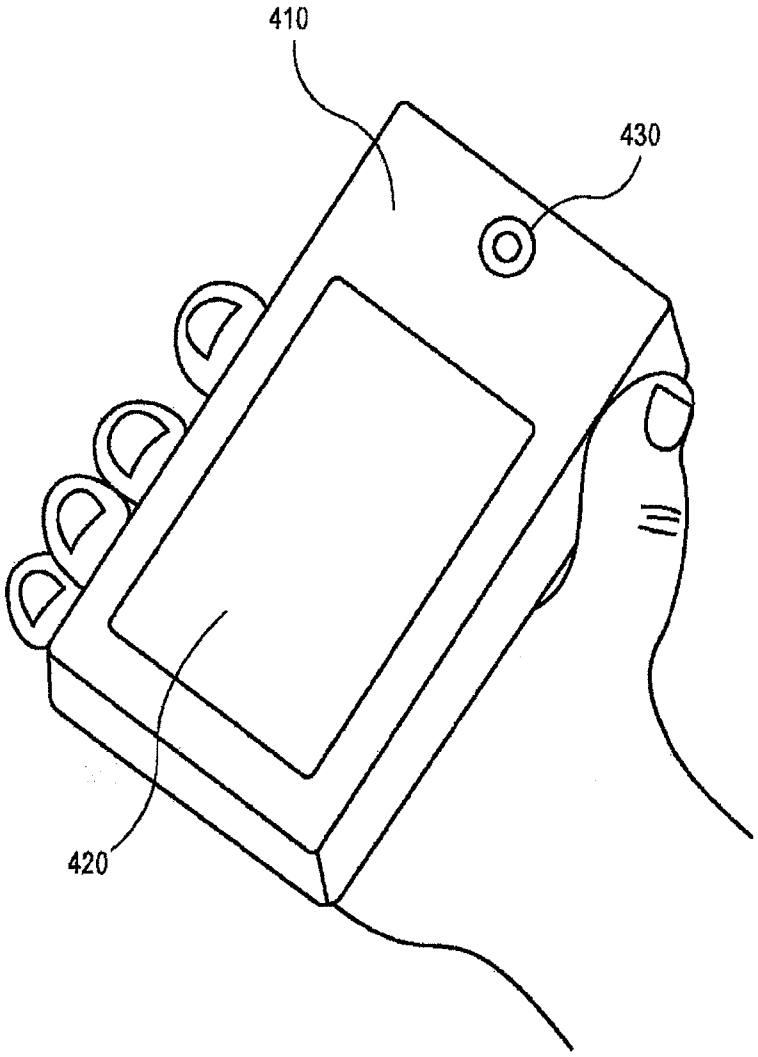

FIG. 4

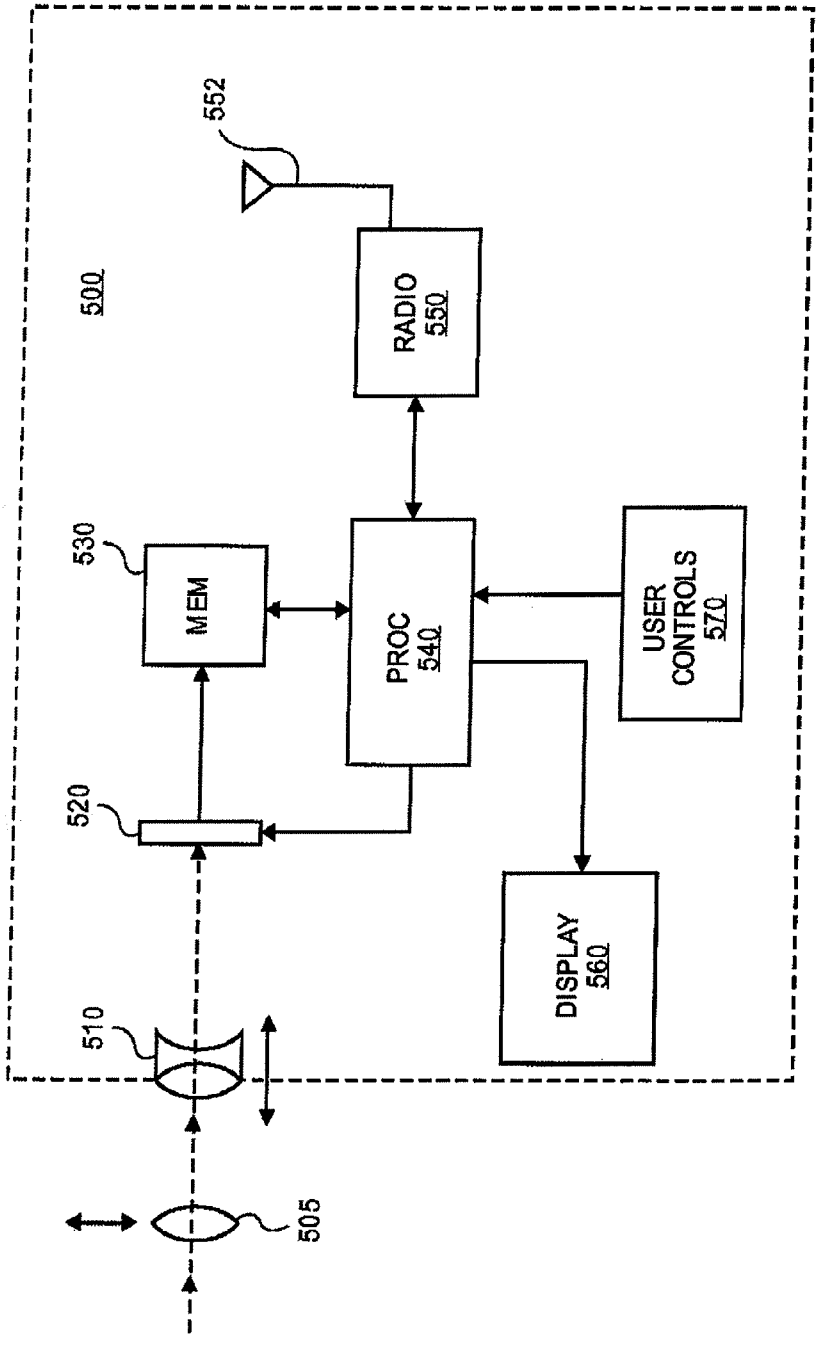
552
500
RADIO
550
530
MEM
PROC
540
USER
CONTROLS
570
520
DISPLAY
560
510
505

FIG. 5

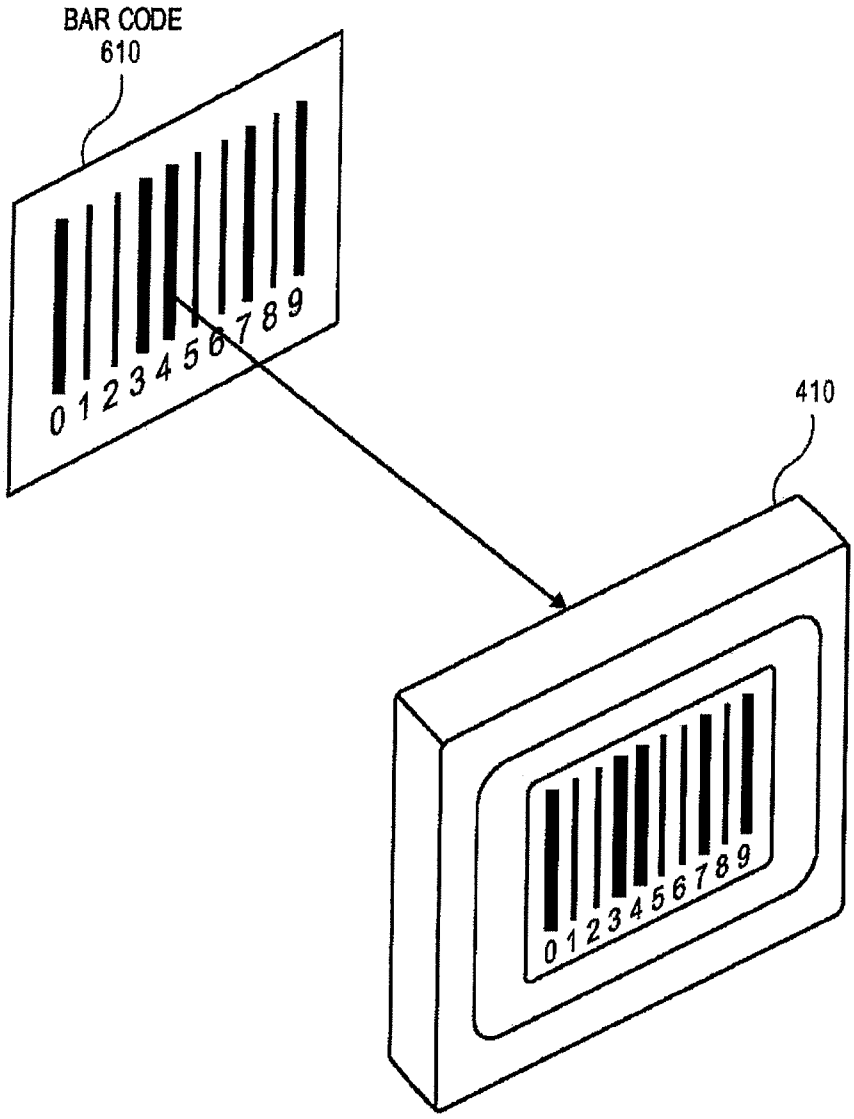

FIG. 6

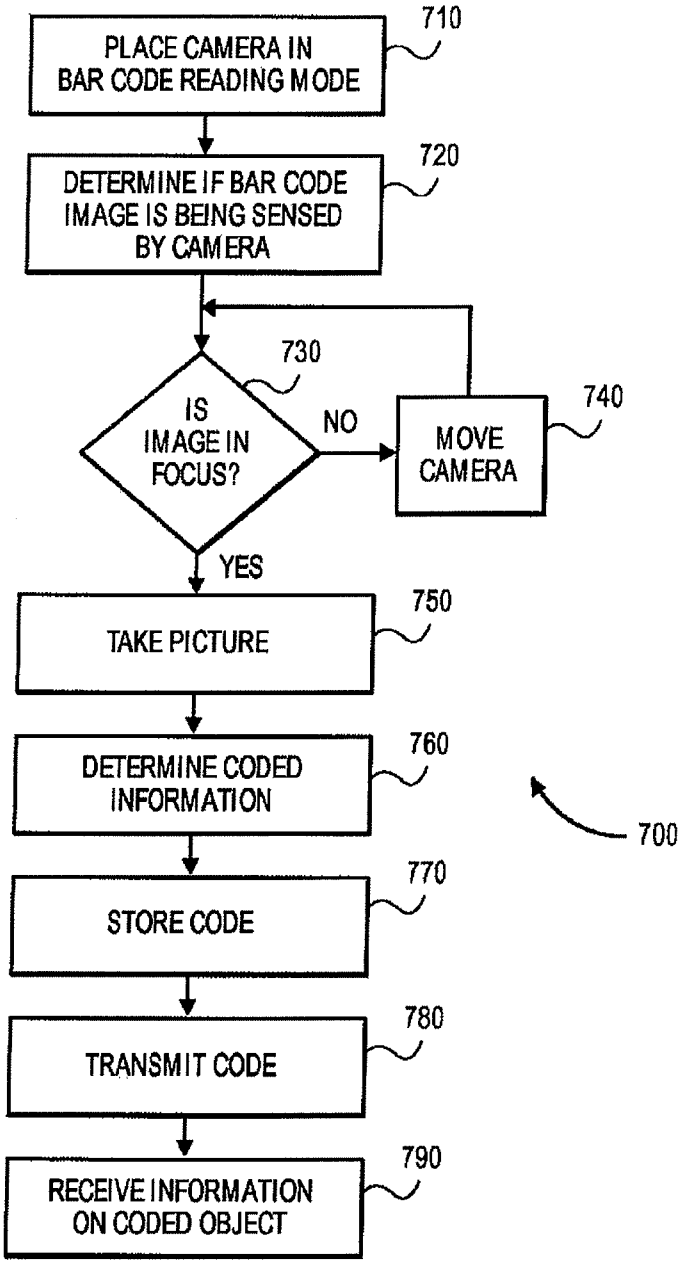
PLACE CAMERA IN BAR CODE READING MODE
710
DETERMINE IF BAR CODE IMAGE IS BEING SENSED BY CAMERA
720
IS IMAGE IN FOCUS?
730
NO
MOVE CAMERA
740
YES
TAKE PICTURE
750
DETERMINE CODED INFORMATION
760
700
STORE CODE
770
TRANSMIT CODE
780
RECEIVE INFORMATION ON CODED OBJECT
790

FIG. 7

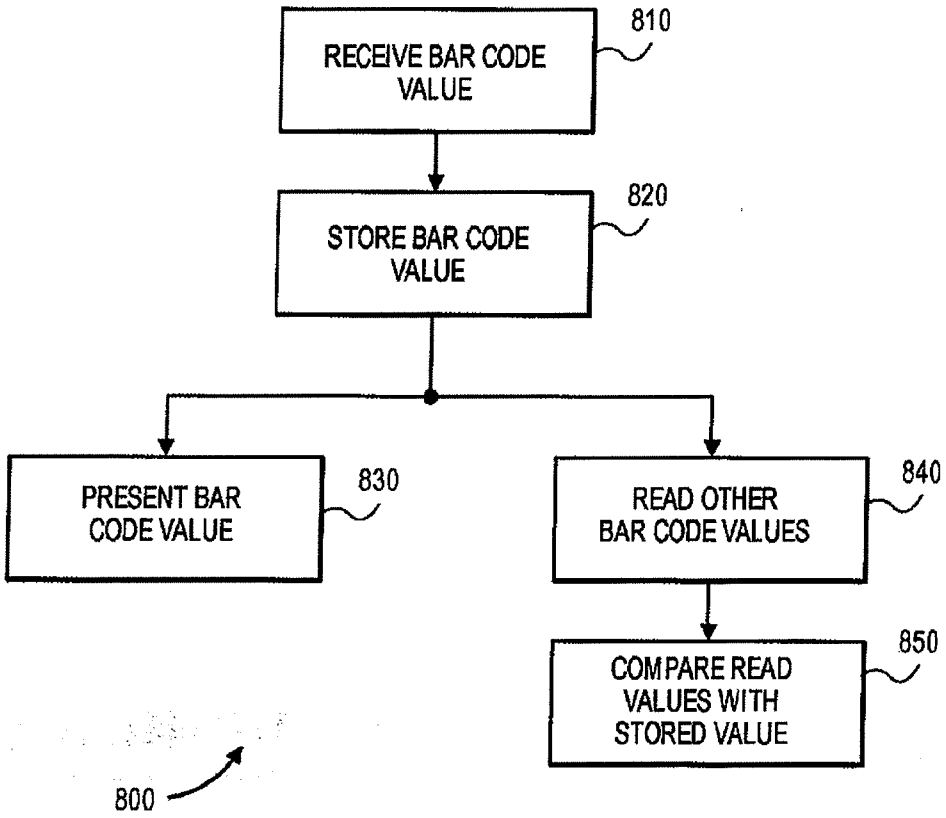
RECEIVE BAR CODE VALUE
810
STORE BAR CODE VALUE
820
PRESENT BAR CODE VALUE
830
READ OTHER BAR CODE VALUES
840
COMPARE READ VALUES WITH STORED VALUE
850
800

FIG. 8