(12) INTERNATIONAL APPLICATION PUBLISHED UNDER THE PATENT COOPERATION TREATY (PCT)

(19) World Intellectual Property Organization
International Bureau

(43) International Publication Date
26 January 2012 (26.01.2012)

PCT

(10) International Publication Number
WO 2012/011989 A1

(51) International Patent Classification:
B01J 8/04 (2006.01) *C10G 49/00* (2006.01)
B01J 19/26 (2006.01)

(21) International Application Number:
PCT/US2011/033281

(22) International Filing Date:
20 April 2011 (20.04.2011)

(25) Filing Language: English

(26) Publication Language: English

(30) Priority Data:
12/839,227 19 July 2010 (19.07.2010) US

(71) Applicant *(for all designated States except US)*: **CHEVRON U.S.A. INC.** [US/US]; 6001 Bollinger Canyon Road, San Ramon, California 94583 (US).

(72) Inventors; and

(75) Inventors/Applicants *(for US only)*: **KILLEN, Ralph E.** [US/US]; 70 Martha Avenue, San Francisco, California 94131 (US). **BOYAK, Craig** [US/US]; 901 Avis Drive, El Cerrito, California 94530 (US). **SONG, Steven X.** [CA/US]; 555 Pierce Street, Apt # 1341, Albany, California 94706 (US). **KEMOUN, Abdenour** [CA/US]; 455 Viking Drive, Pleasant Hill, California 94523 (US). **SOUERS, Steve** [US/US]; 3801 Bergerac Lane, Ocean Springs, Mississippi 39564 (US). **PARIMI, Krishniah** [US/US]; 2426 Heritage Oaks Drive, Alamo, California 94507 (US). **AKIN, Zackory** [US/US]; 1444 Cloudview Drive, Pleasant Hill, California 94523 (US).

(74) Agents: **KLAASSEN, Alan W.** et al.; Chevron Corporation, Law Department, Post Office Box 6006, San Ramon, California 94583-0806 (US).

(81) Designated States *(unless otherwise indicated, for every kind of national protection available)*: AE, AG, AL, AM, AO, AT, AU, AZ, BA, BB, BG, BH, BR, BW, BY, BZ, CA, CH, CL, CN, CO, CR, CU, CZ, DE, DK, DM, DO, DZ, EC, EE, EG, ES, FI, GB, GD, GE, GH, GM, GT, HN, HR, HU, ID, IL, IN, IS, JP, KE, KG, KM, KN, KP, KR, KZ, LA, LC, LK, LR, LS, LT, LU, LY, MA, MD, ME, MG, MK, MN, MW, MX, MY, MZ, NA, NG, NI, NO, NZ, OM, PE, PG, PH, PL, PT, RO, RS, RU, SC, SD, SE, SG, SK, SL, SM, ST, SV, SY, TH, TJ, TM, TN, TR, TT, TZ, UA, UG, US, UZ, VC, VN, ZA, ZM, ZW.

(84) Designated States *(unless otherwise indicated, for every kind of regional protection available)*: ARIPO (BW, GH, GM, KE, LR, LS, MW, MZ, NA, SD, SL, SZ, TZ, UG, ZM, ZW), Eurasian (AM, AZ, BY, KG, KZ, MD, RU, TJ, TM), European (AL, AT, BE, BG, CH, CY, CZ, DE, DK, EE, ES, FI, FR, GB, GR, HR, HU, IE, IS, IT, LT, LU, LV, MC, MK, MT, NL, NO, PL, PT, RO, RS, SE, SI, SK, SM, TR), OAPI (BF, BJ, CF, CG, CI, CM, GA, GN, GQ, GW, ML, MR, NE, SN, TD, TG).

Declarations under Rule 4.17:

— *as to applicant's entitlement to apply for and be granted a patent (Rule 4.17(ii))*

— *as to the applicant's entitlement to claim the priority of the earlier application (Rule 4.17(iii))*

Published:

— *with international search report (Art. 21(3))*

[Continued on next page]

(54) **Title**: MULTIPHASE CONTACT AND DISTRIBUTION APPARATUS FOR HYDRO PROCESSING

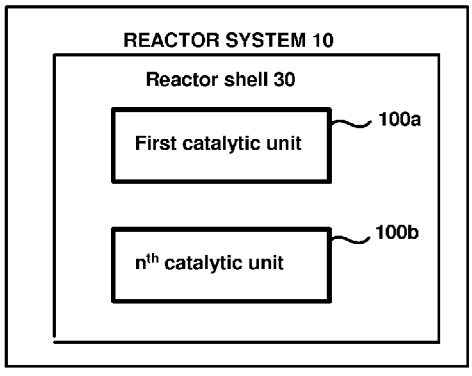

FIG. 1

(57) **Abstract**: Systems and apparatus for mixing, cooling, and distributing multiphase fluid mixtures within a reactor, wherein reactor internal apparatus of the present invention provides not only improved fluid mixing and distribution to each underlying catalyst bed surface, but also offers other advantages including: decreased mixing tray height; easier maintenance, assembly and disassembly; and decreased amounts of fabrication material. In an embodiment, fluid may be evenly distributed to a catalyst bed from a fluid distribution unit comprising a nozzle tray including a plurality of nozzles, wherein the nozzles include at least one liquid inlet disposed tangentially to an inner surface of the nozzle.

WO 2012/011989 A1

— *before the expiration of the time limit for amending the claims and to be republished in the event of receipt of amendments (Rule 48.2(h))*