DRAWINGS

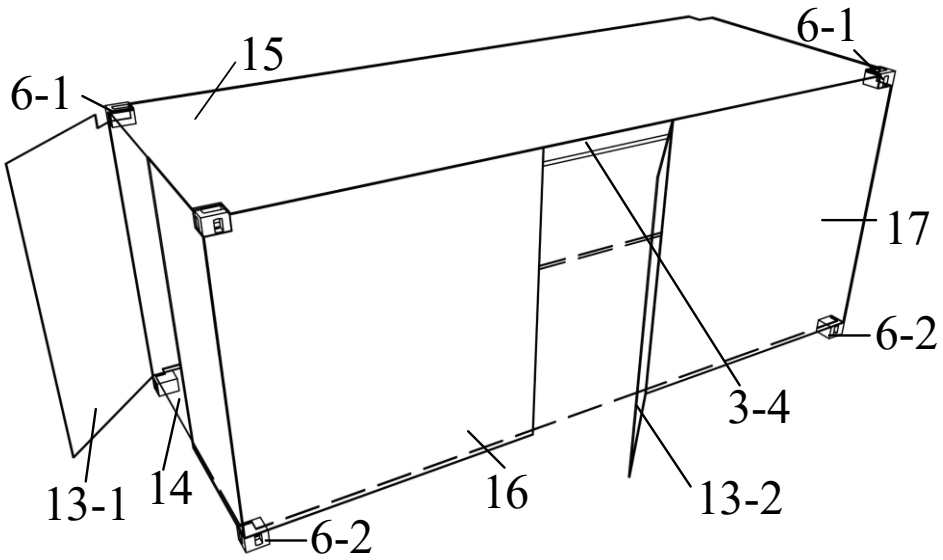

FIG. 1

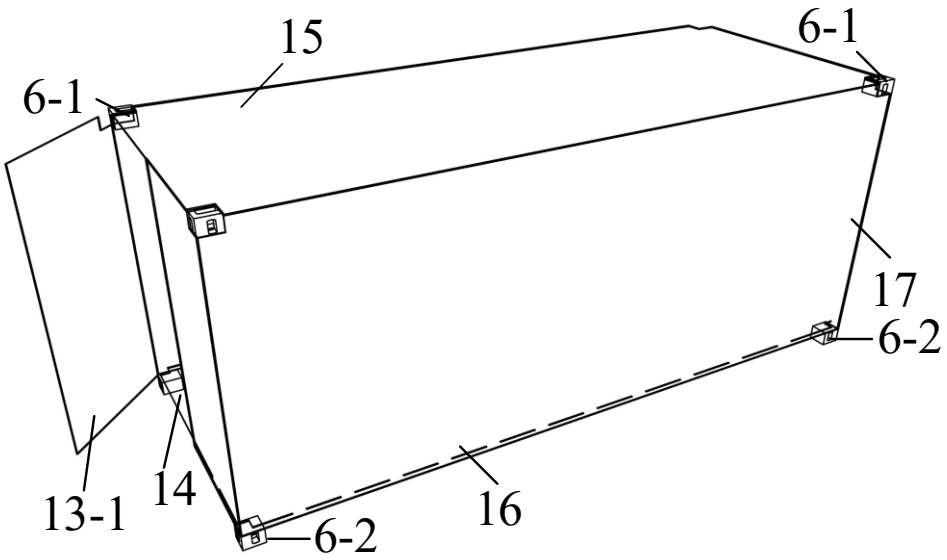

FIG. 2

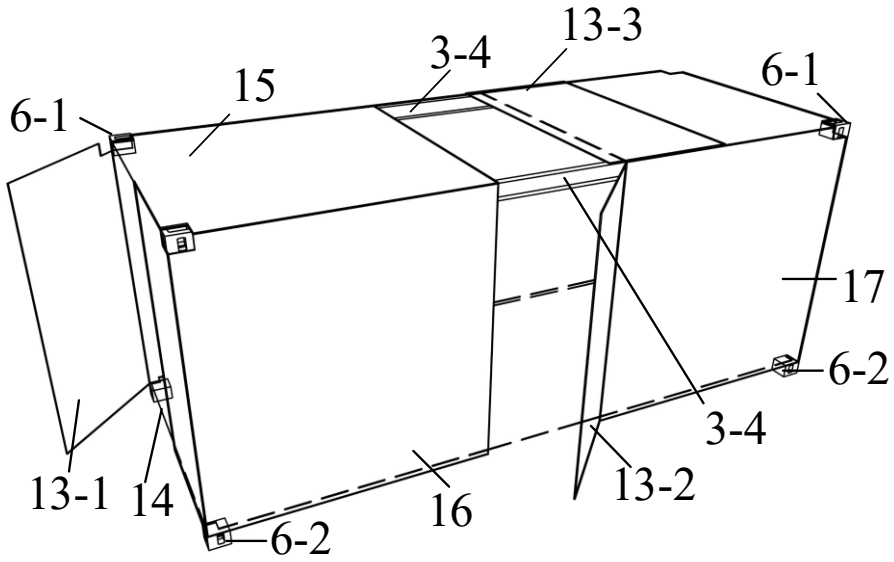

FIG. 3

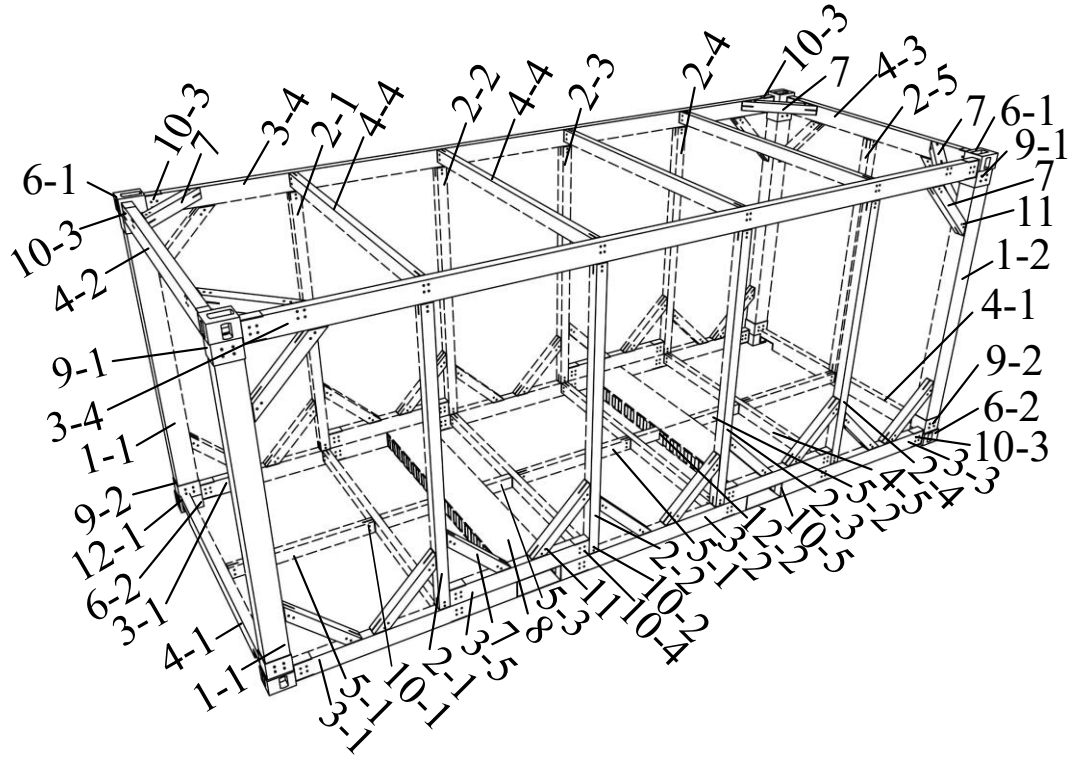
6-1
10-3
4-2
9-1
3-4
1-1
9-2
12-1
6-2
3-1
4-1
1-1
3-1
5-1
10-1
2-1
3-5
8
5-3
11
10-4
2-2
5-1
3-2
12-2
10-5
2-3
5-4
2-5
4-3
7
10-3
2-4
4-4
2-1
3-4
7
10-3
6-1
7
9-1
11
1-2
4-1
9-2
6-2
10-3

FIG. 4

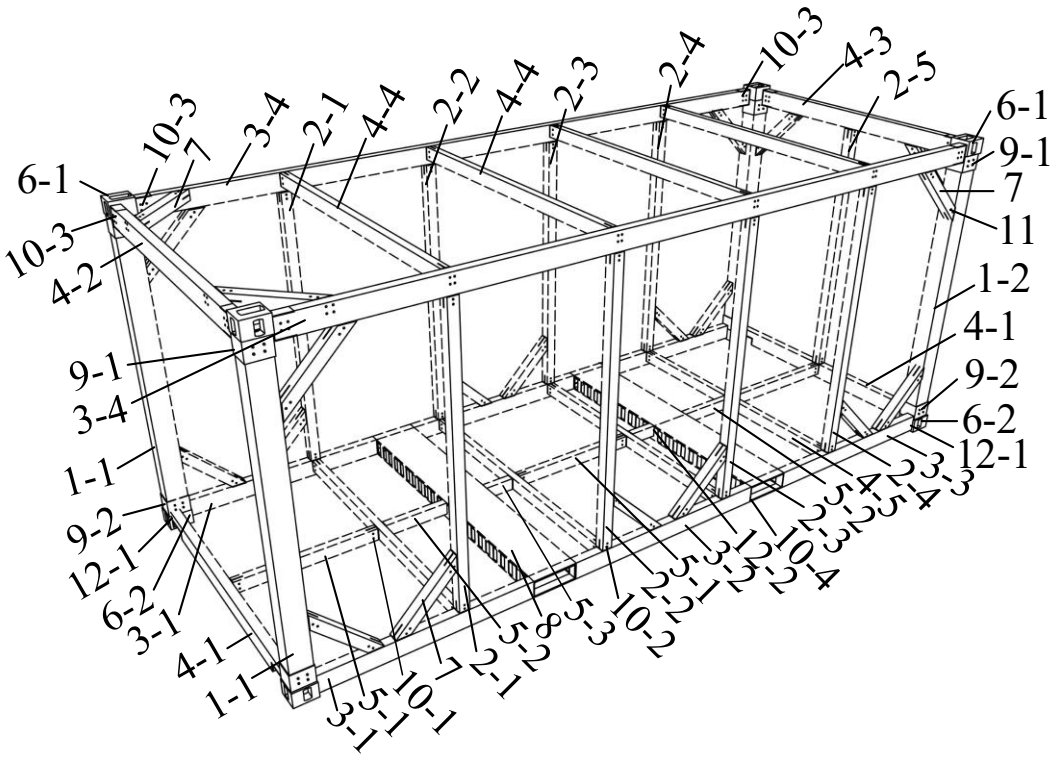
6-1
10-3
7
3-4
2-1
4-4
2-2
4-4
2-3
2-4
10-3
4-3
2-5
6-1
9-1
7
11
10-3
4-2
1-2
4-1
9-1
3-4
9-2
6-2
12-1
1-1
9-2
12-1
6-2
3-1
4-1
1-1
3-1
5-1
10-1
7
2-1
5-2
8
5-3
10-2
2-2
5-1
3-2
12-2
10-4
2-3
5-2
4-5
2-4
3-3

FIG. 5

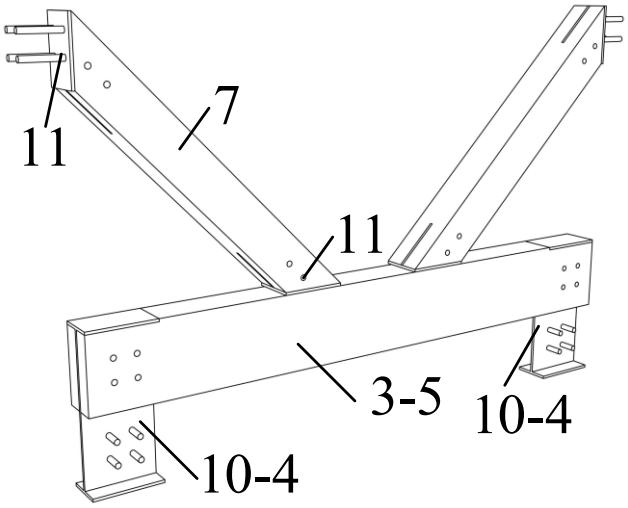

FIG. 6

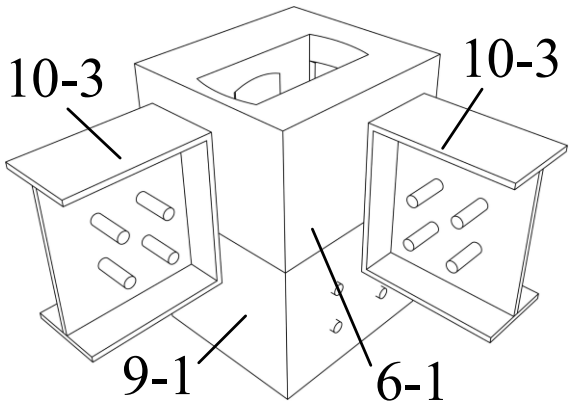

FIG. 7

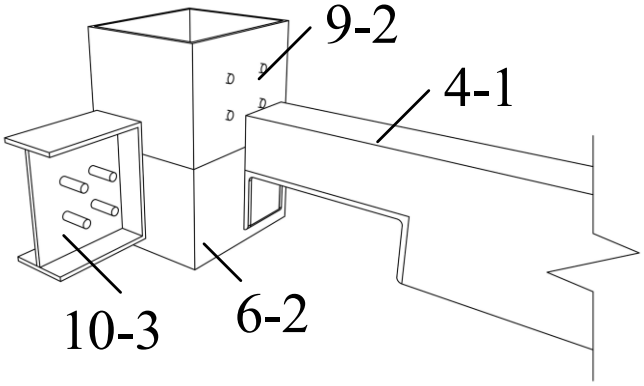

FIG. 8

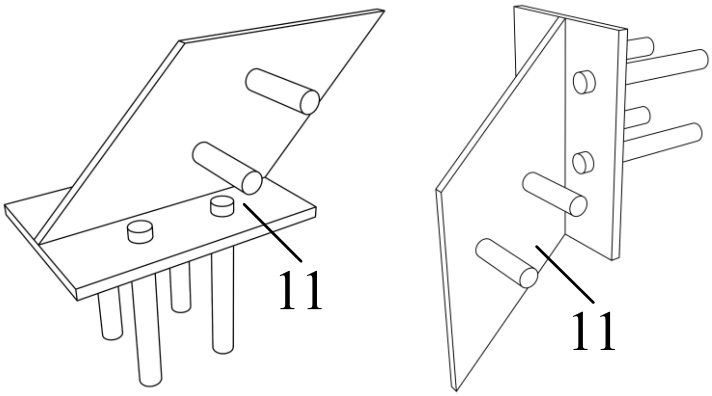

FIG. 9

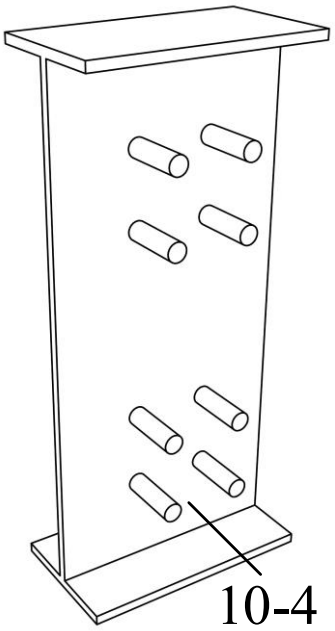

FIG. 10