A

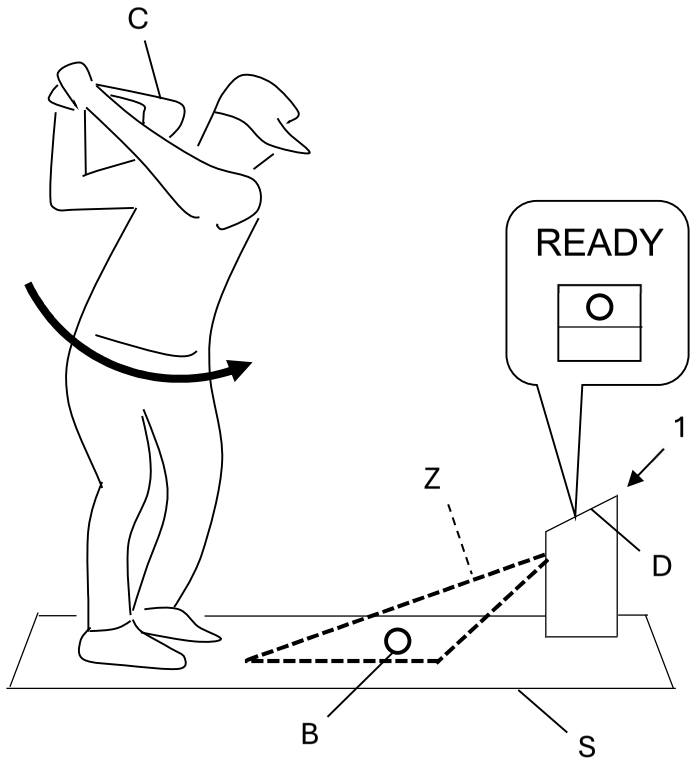

B

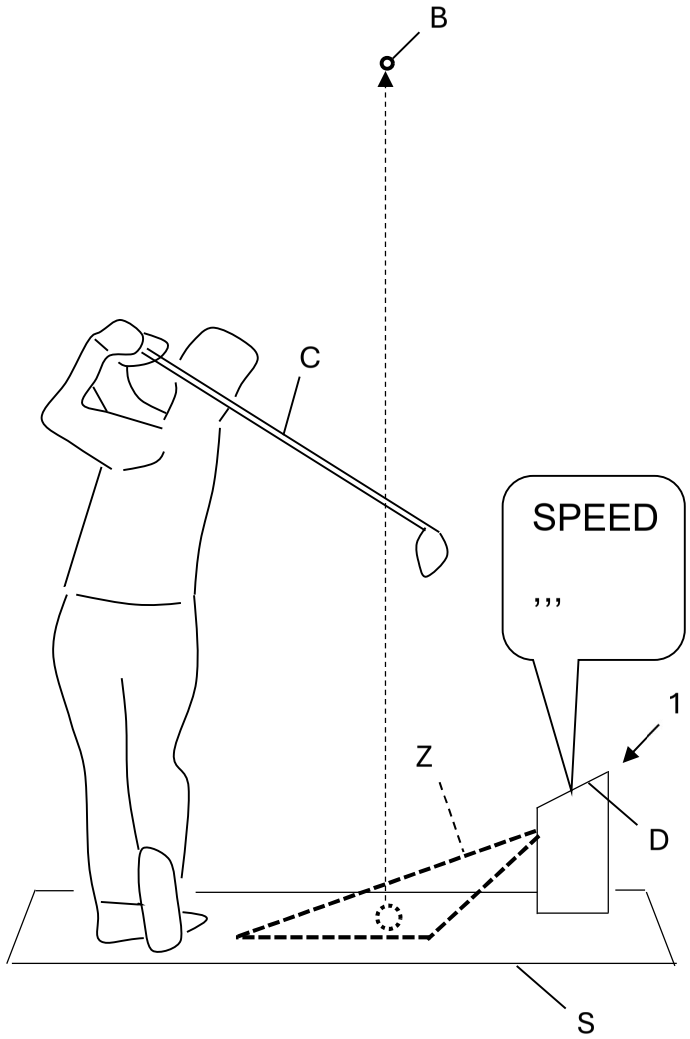

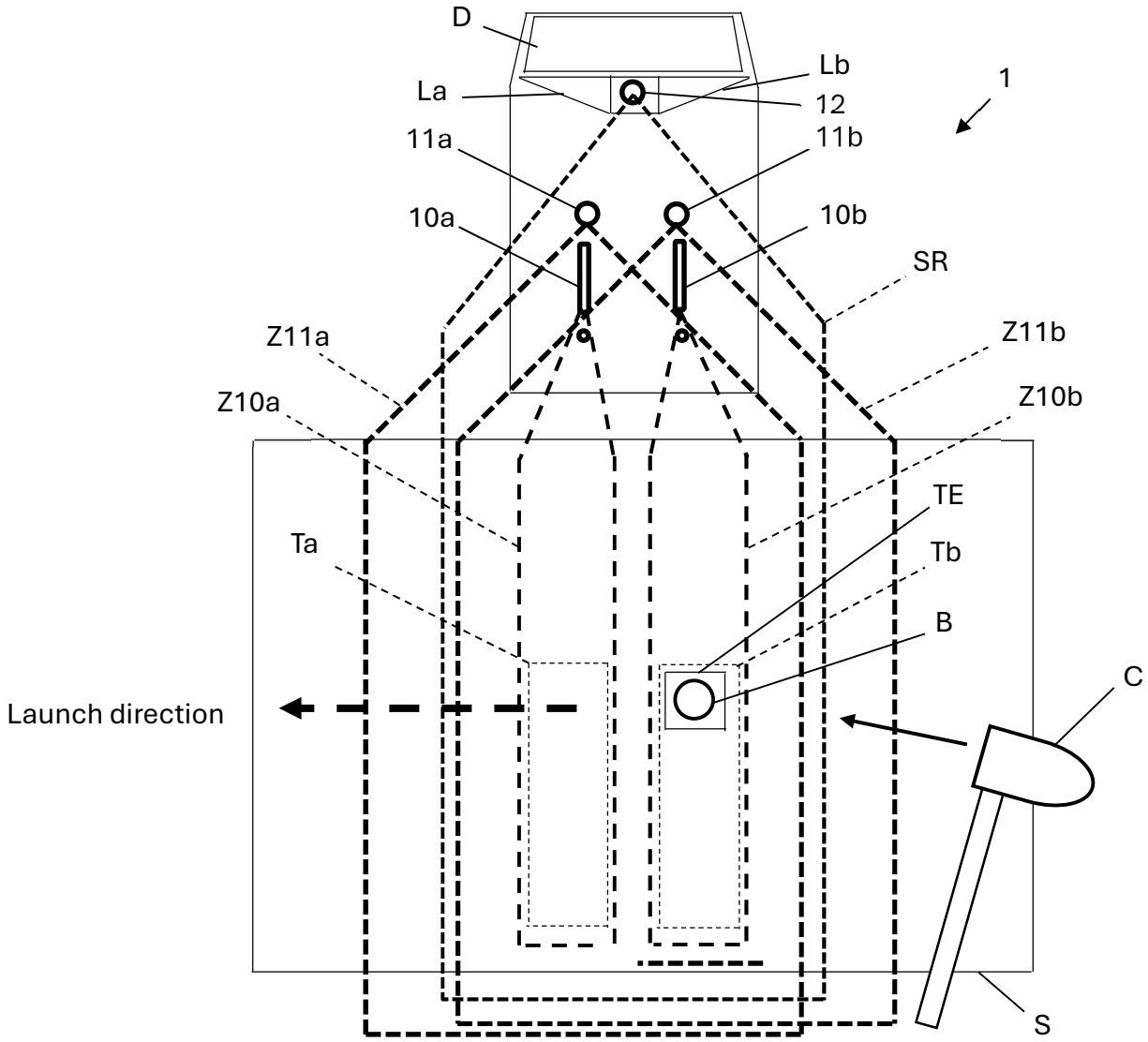
D
Lb
La
12
1
11a
11b
10a
10b
SR
Z11a
Z11b
Z10a
Z10b
TE
Ta
Tb
B
C
Launch direction
S

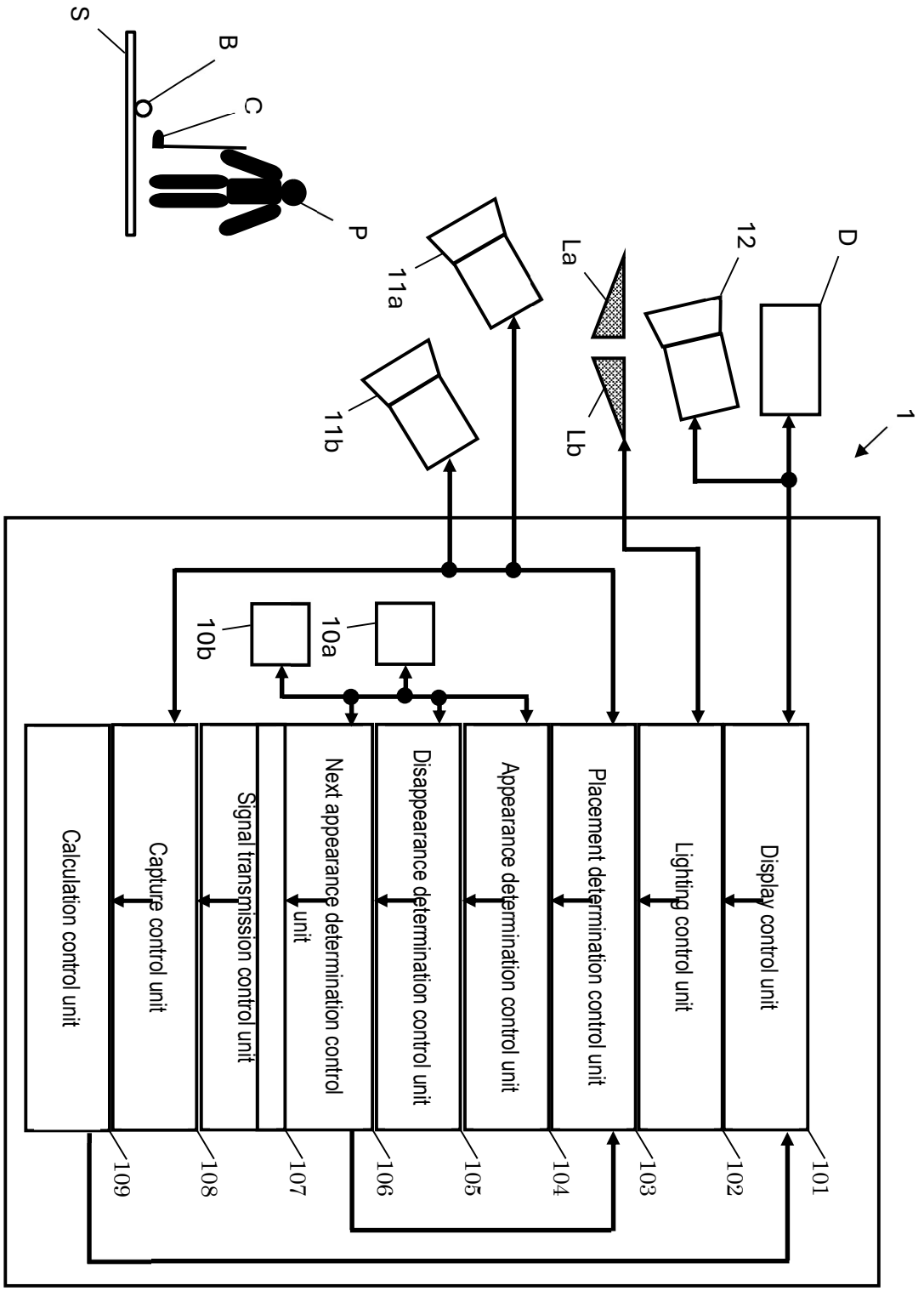
S
B
C
P
11a
11b
La
Lb
12
D
1
10b
10a
Display control unit
Lighting control unit
Placement determination control unit
Appearance determination control unit
Disappearance determination control unit
Next appearance determination control unit
Signal transmission control unit
Capture control unit
Calculation control unit
101
102
103
104
105
106
107
108
109

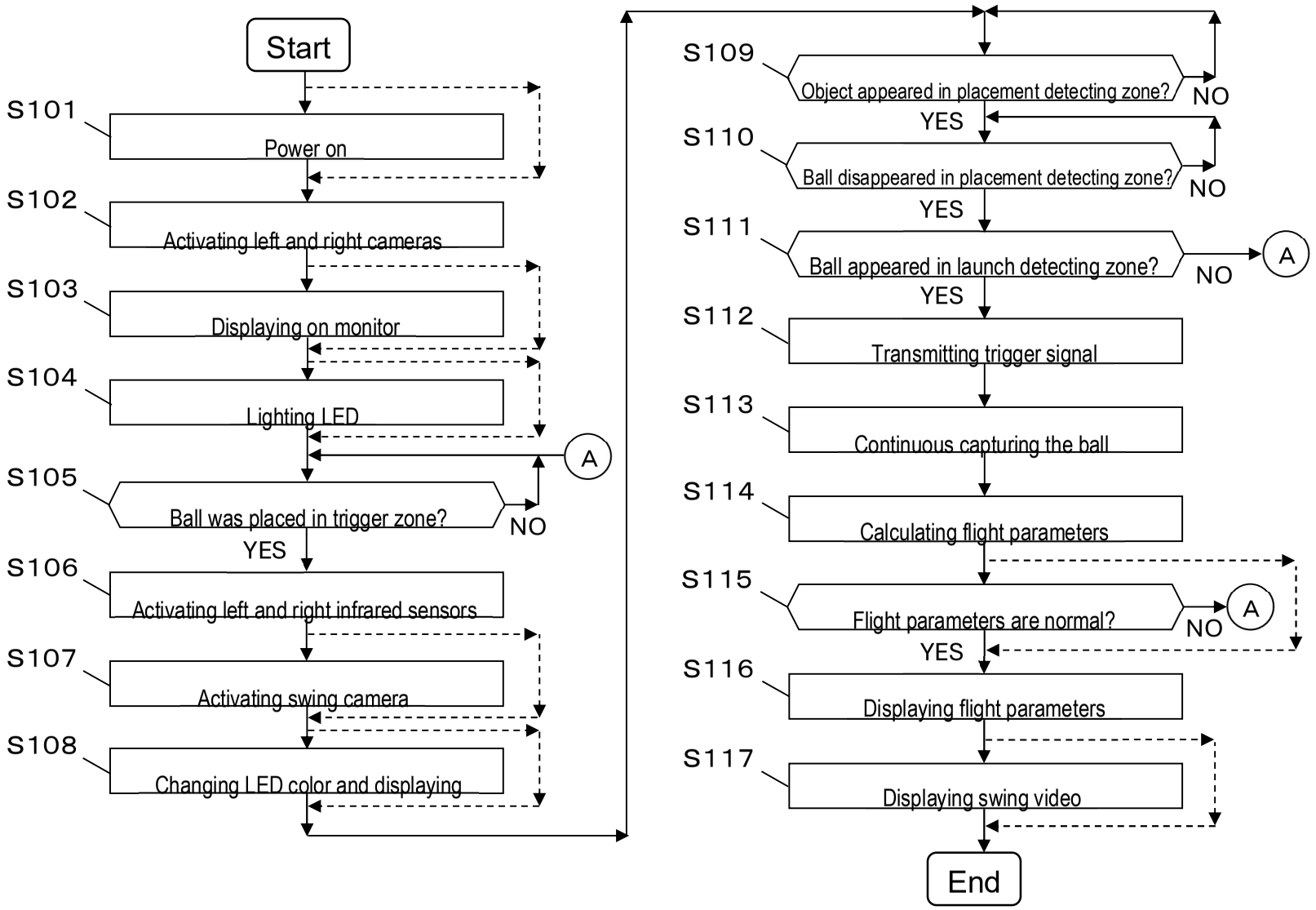
Start
S101
Power on
S102
Activating left and right cameras
S103
Displaying on monitor
S104
Lighting LED
A
S105
Ball was placed in trigger zone?
NO
YES
S106
Activating left and right infrared sensors
S107
Activating swing camera
S108
Changing LED color and displaying
S109
Object appeared in placement detecting zone?
NO
YES
S110
Ball disappeared in placement detecting zone?
NO
YES
S111
Ball appeared in launch detecting zone?
NO
A
YES
S112
Transmitting trigger signal
S113
Continuous capturing the ball
S114
Calculating flight parameters
S115
Flight parameters are normal?
NO
A
YES
S116
Displaying flight parameters
S117
Displaying swing video
End

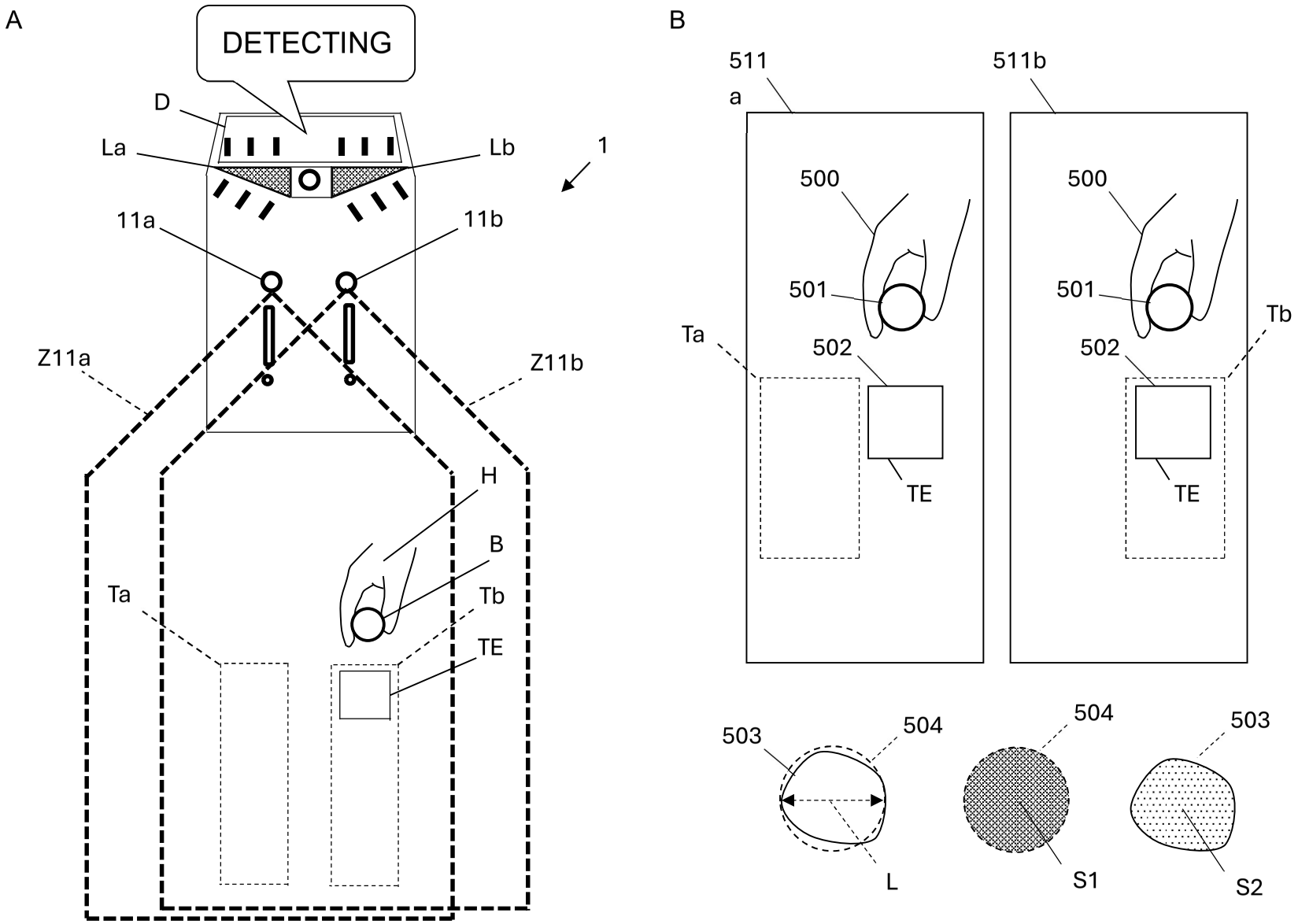
A
DETECTING
D
La
Lb
1
11a
11b
Z11a
Z11b
H
B
Ta
Tb
TE
B
511
a
511b
500
501
502
Ta
Tb
TE
503
504
L
S1
S2

A

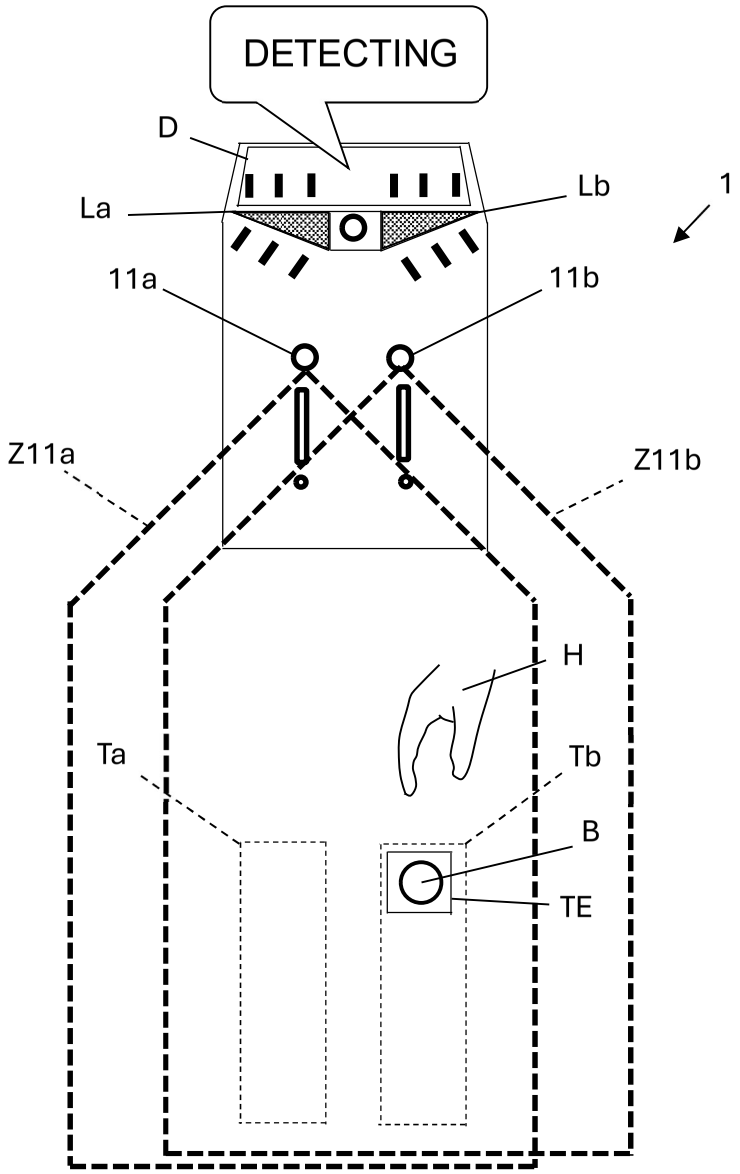
DETECTING
D
La
Lb
1
11a
11b
Z11a
Z11b
H
Ta
Tb
B
TE

B

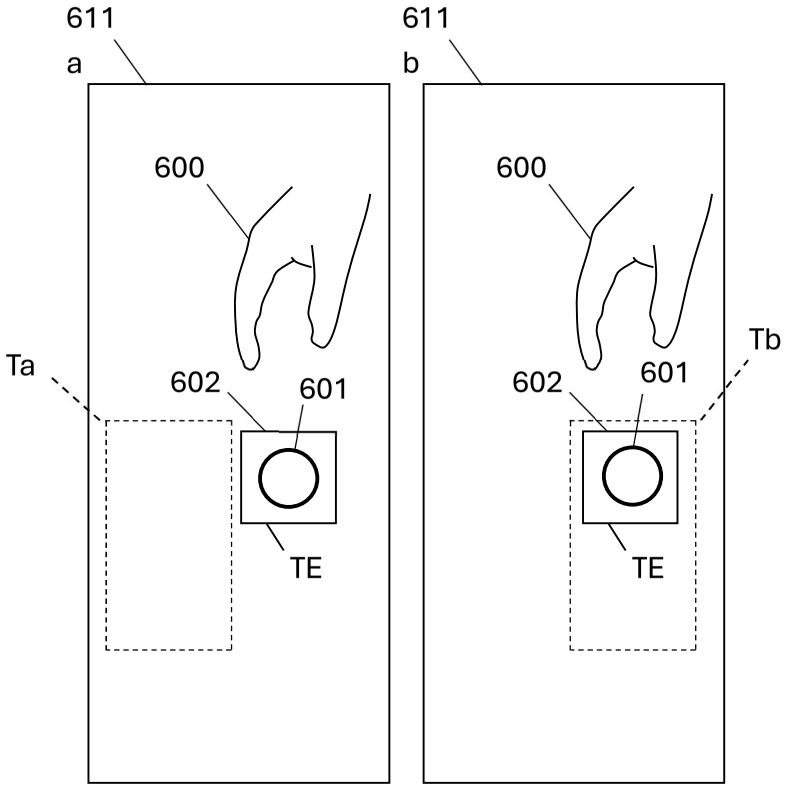
611
a
611
b
600
600
Ta
Tb
602
601
602
601
TE
TE

A

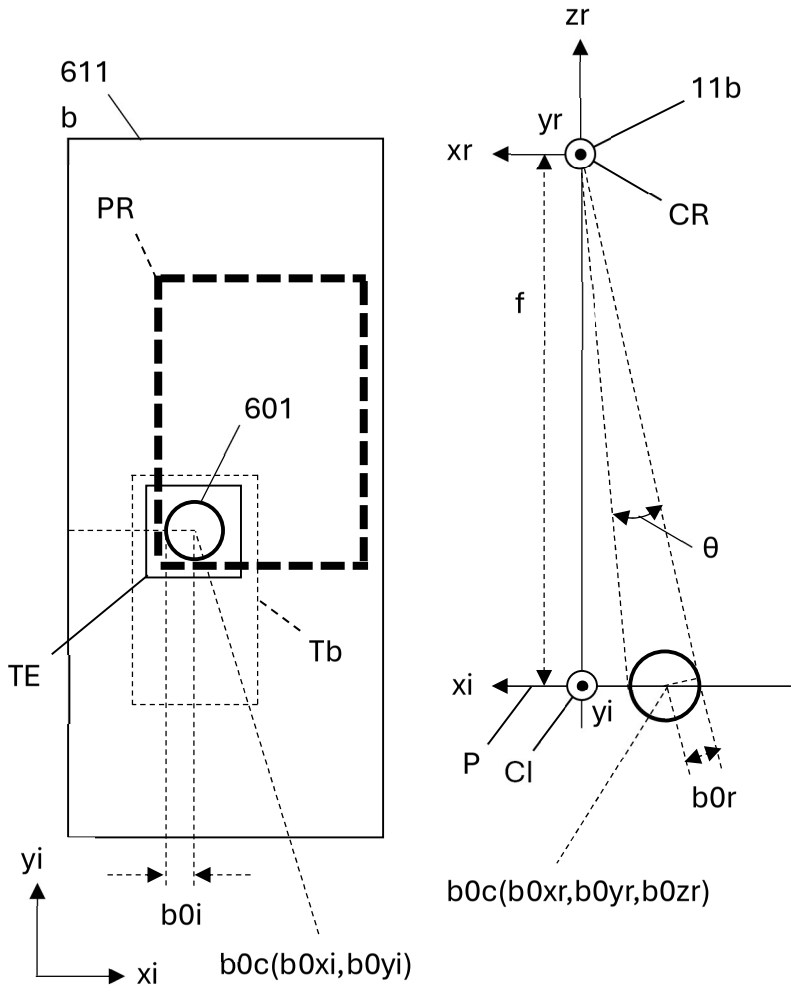
611
b
PR
601
TE
Tb
yi
b0i
xi
b0c(b0xi,b0yi)
zr
11b
yr
xr
CR
f
θ
xi
yi
P
Cl
b0r
b0c(b0xr,b0yr,b0zr)

B

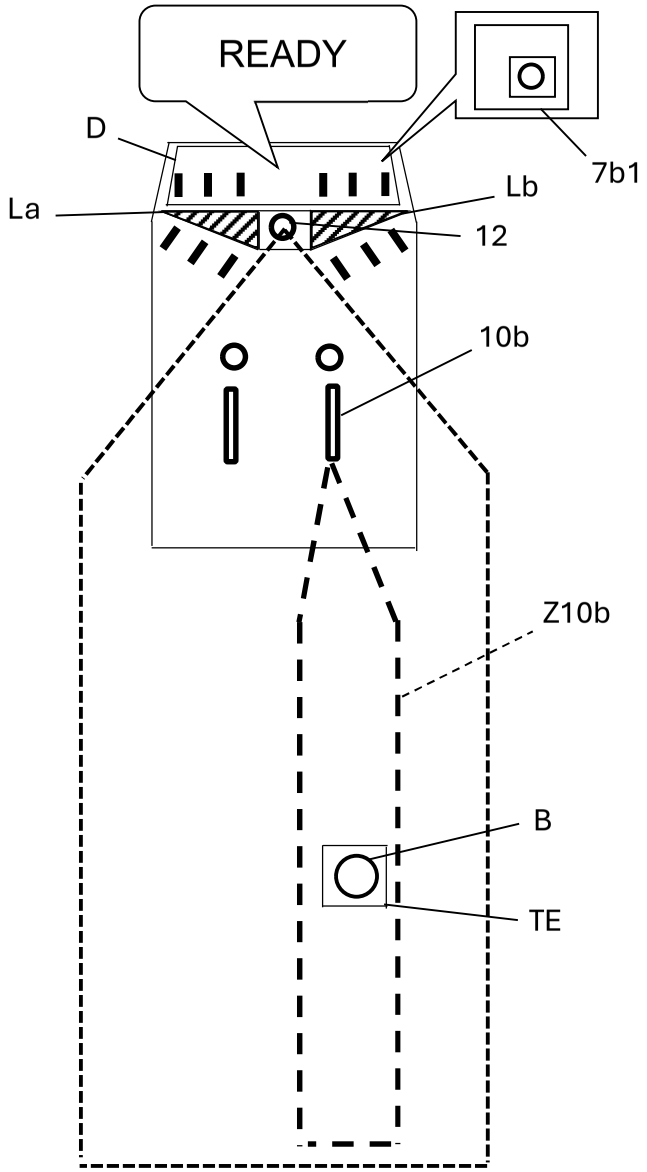
READY
D
7b1
La
Lb
12
10b
Z10b
B
TE

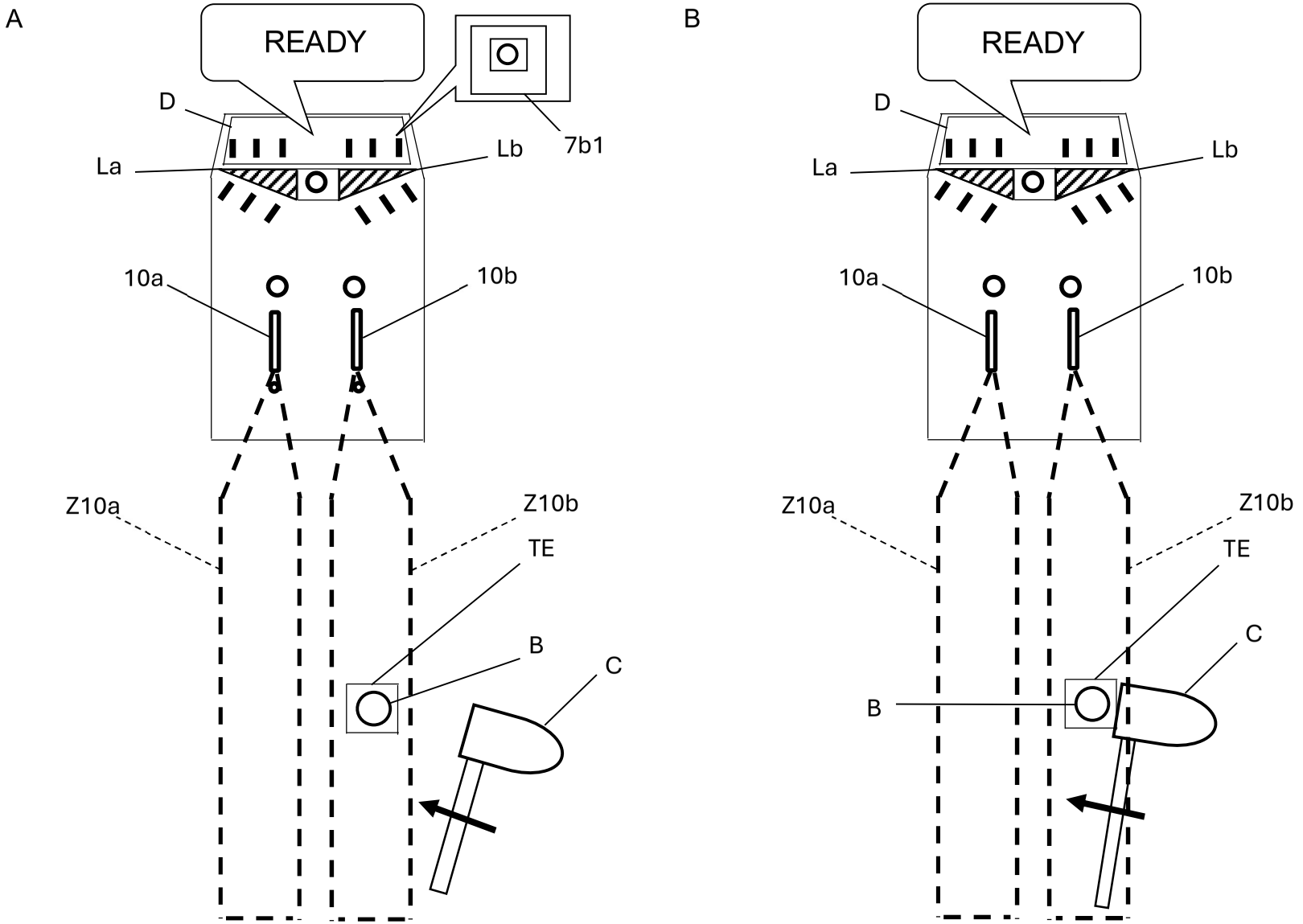
A
READY
D
La
Lb
7b1
10a
10b
Z10a
Z10b
TE
B
C
B
READY
D
La
Lb
10a
10b
Z10a
Z10b
TE
C
B

A

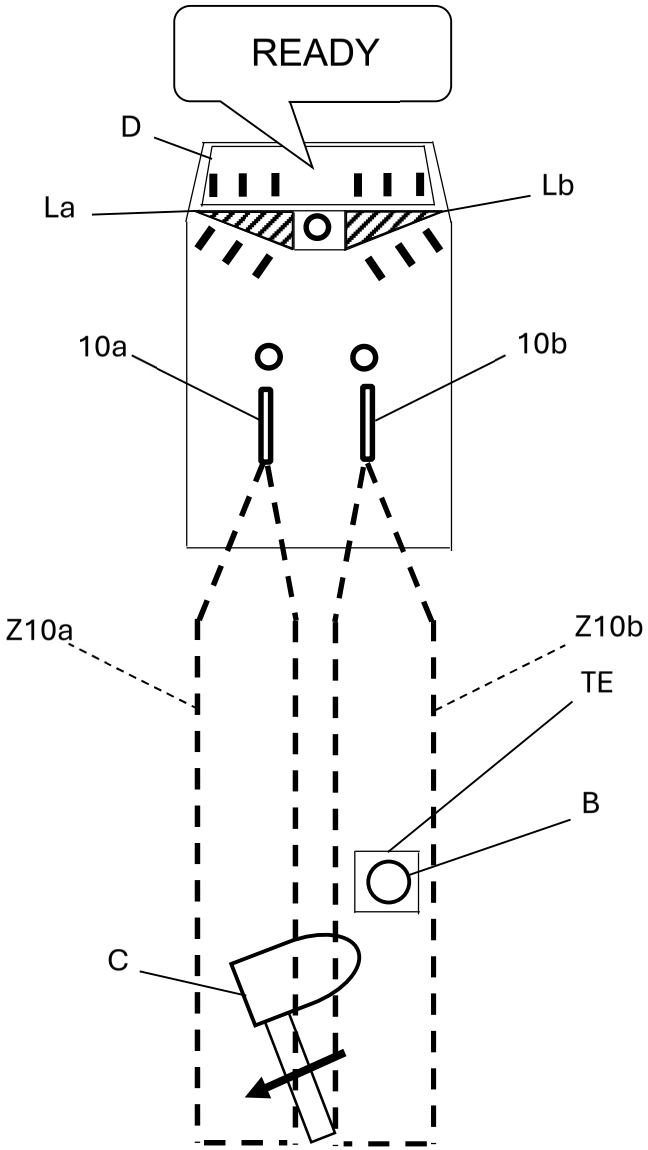
READY
D
La
Lb
10a
10b
Z10a
Z10b
TE
B
C

B

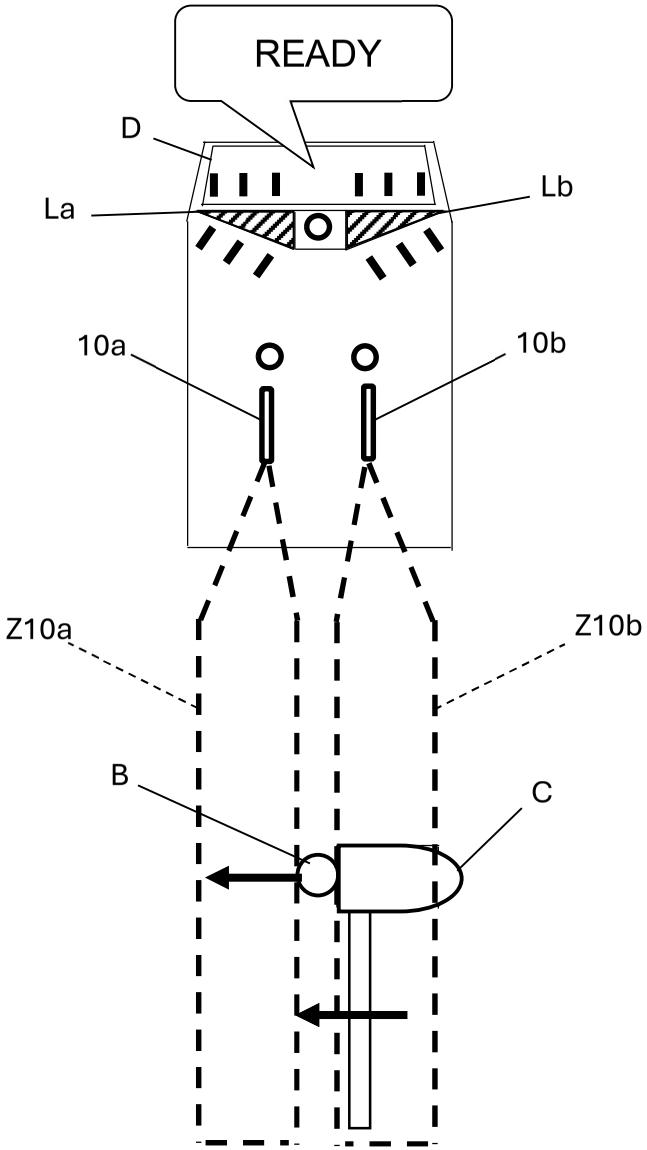
READY
D
La
Lb
10a
10b
Z10a
Z10b
B
C

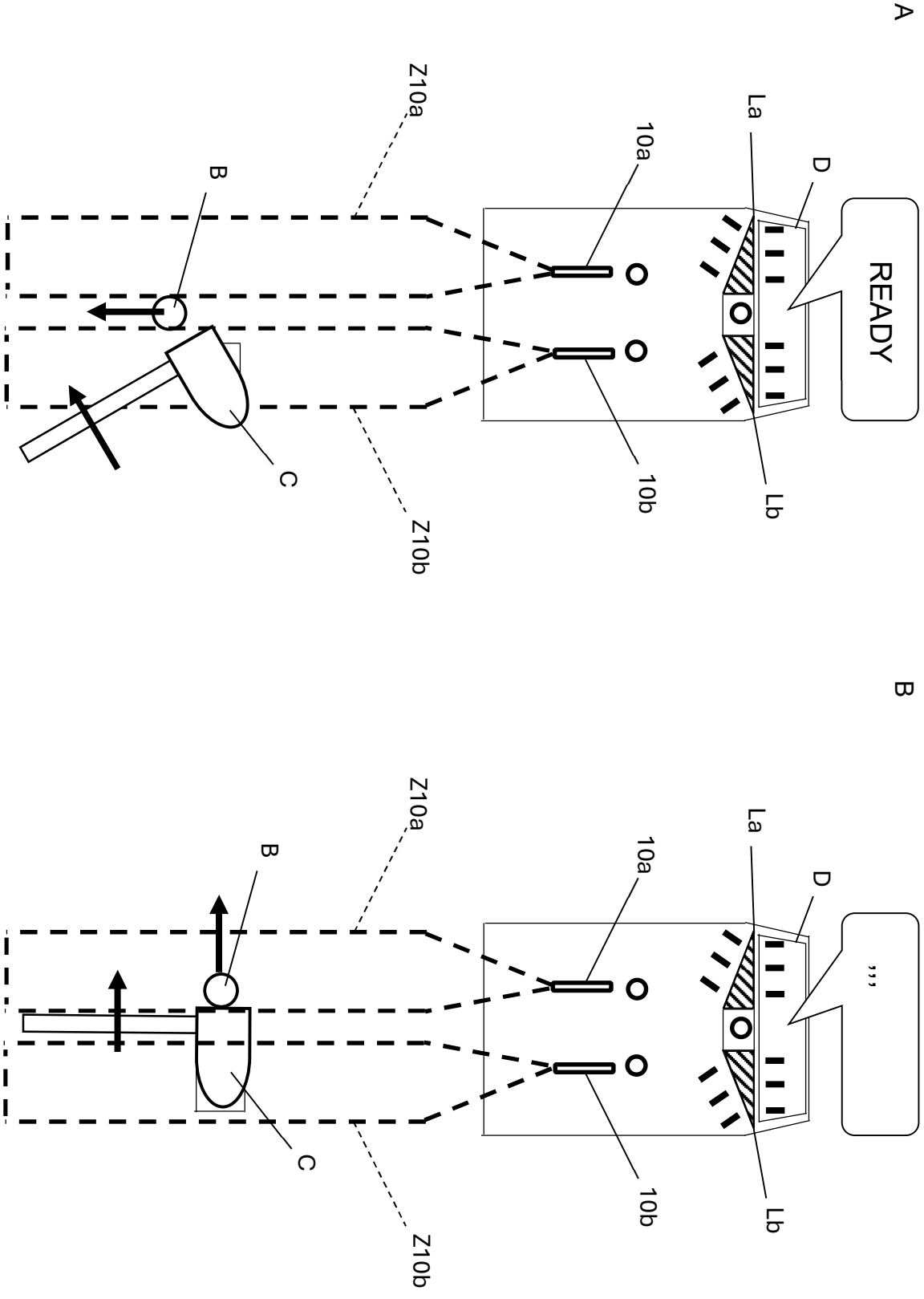
A
READY
D
La
Lb
10a
10b
Z10a
Z10b
B
C
B
,,,
D
La
Lb
10a
10b
Z10a
Z10b
B
C

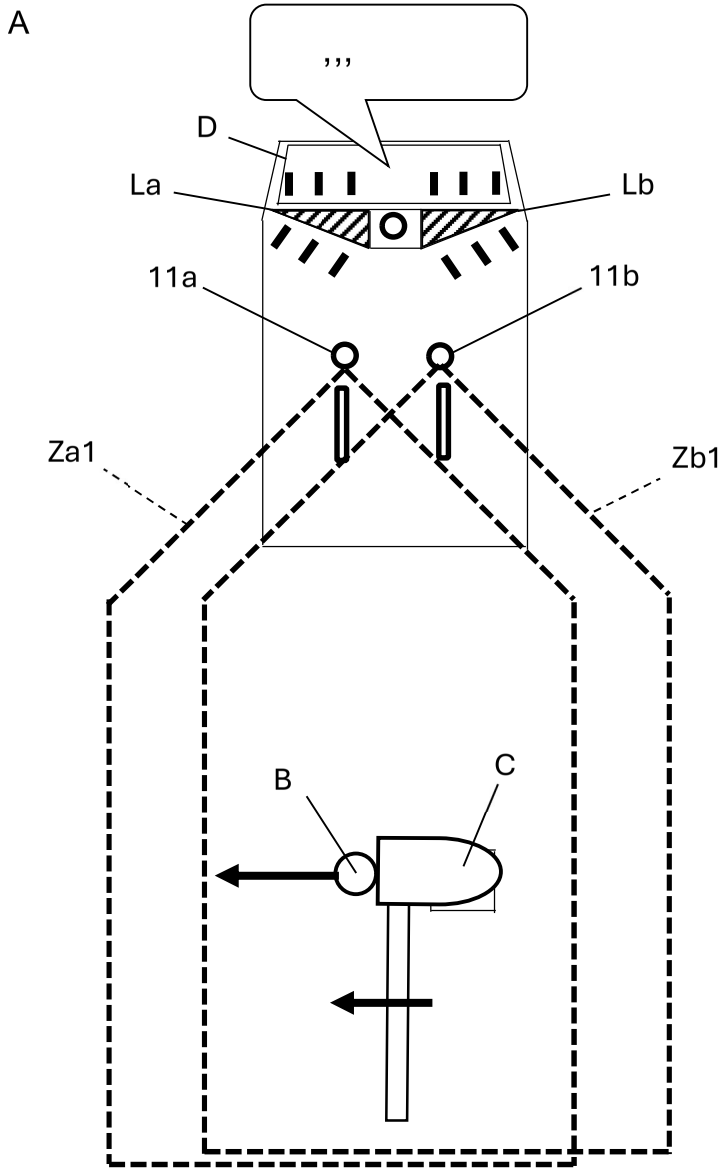
A
,,,
D
La
Lb
11a
11b
Za1
Zb1
B
C

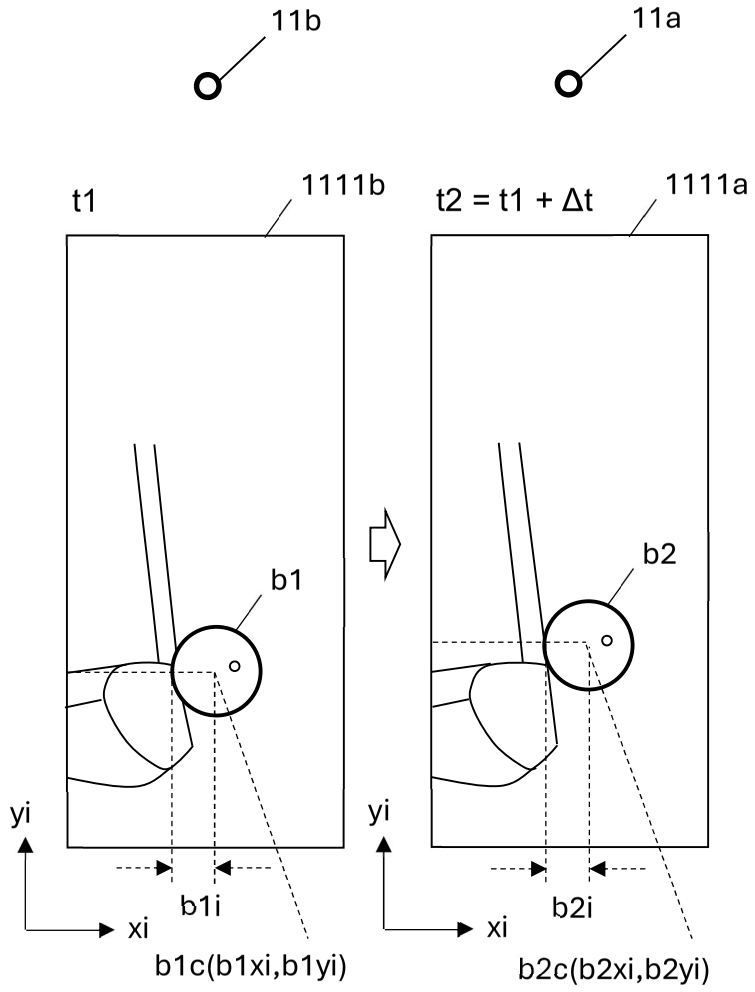
B
11b
11a
t1
1111b
t2 = t1 + Δt
1111a
b1
b2
yi
yi
b1i
b2i
xi
xi
b1c(b1xi,b1yi)
b2c(b2xi,b2yi)

A

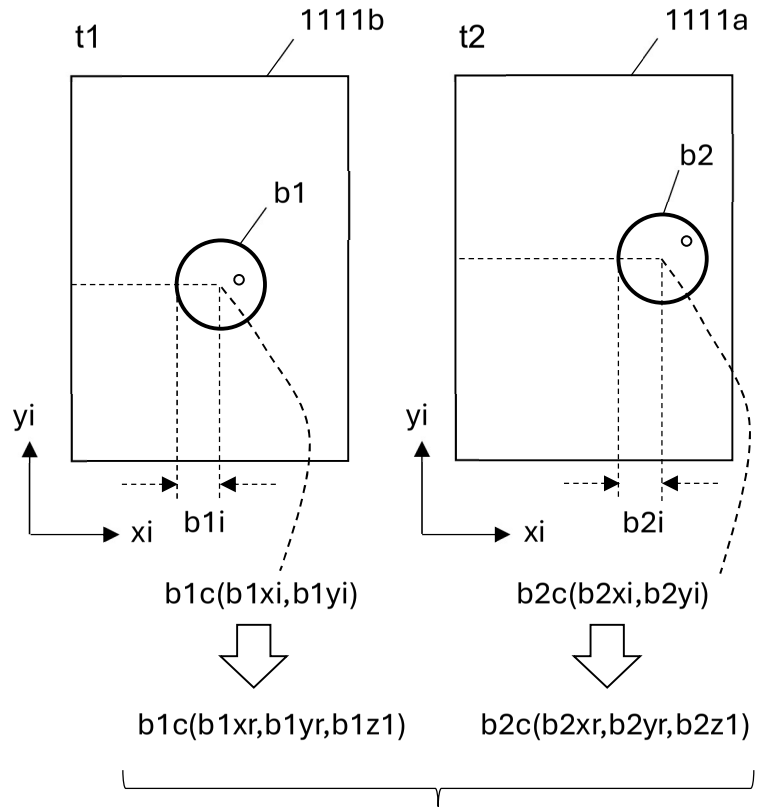

CARRY ,,, YDS

SPEED ,,, M/S

LAUNCH ANGLE ,,, DEG

SIDE ANGLE ,,, DEG

B

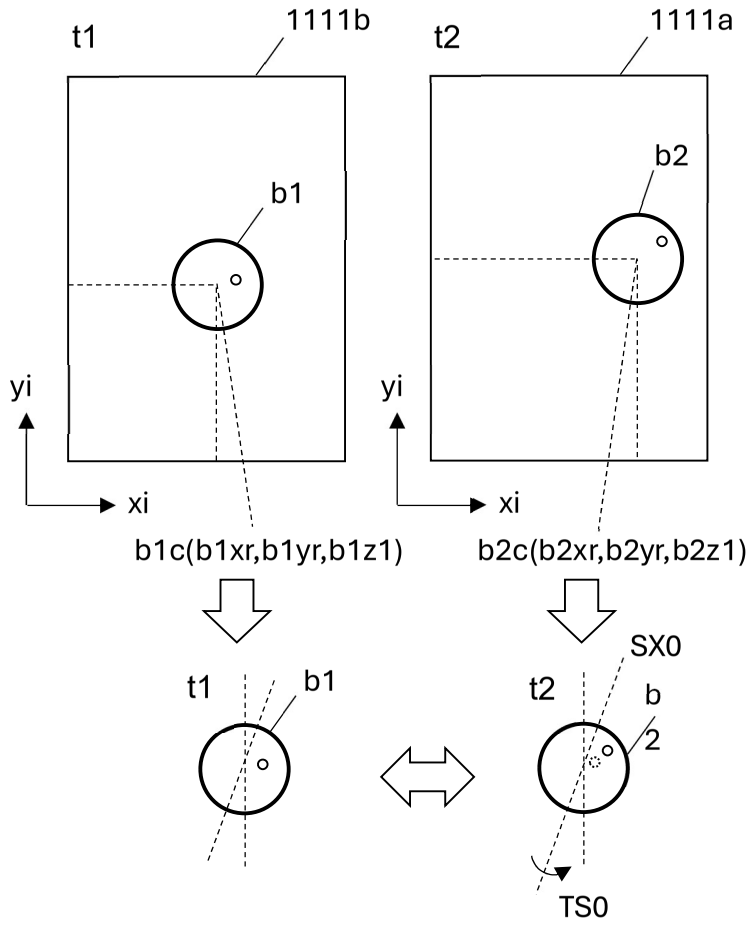

BACK SPIN ,,, RPM

SIDE SPIN ,,, RPM

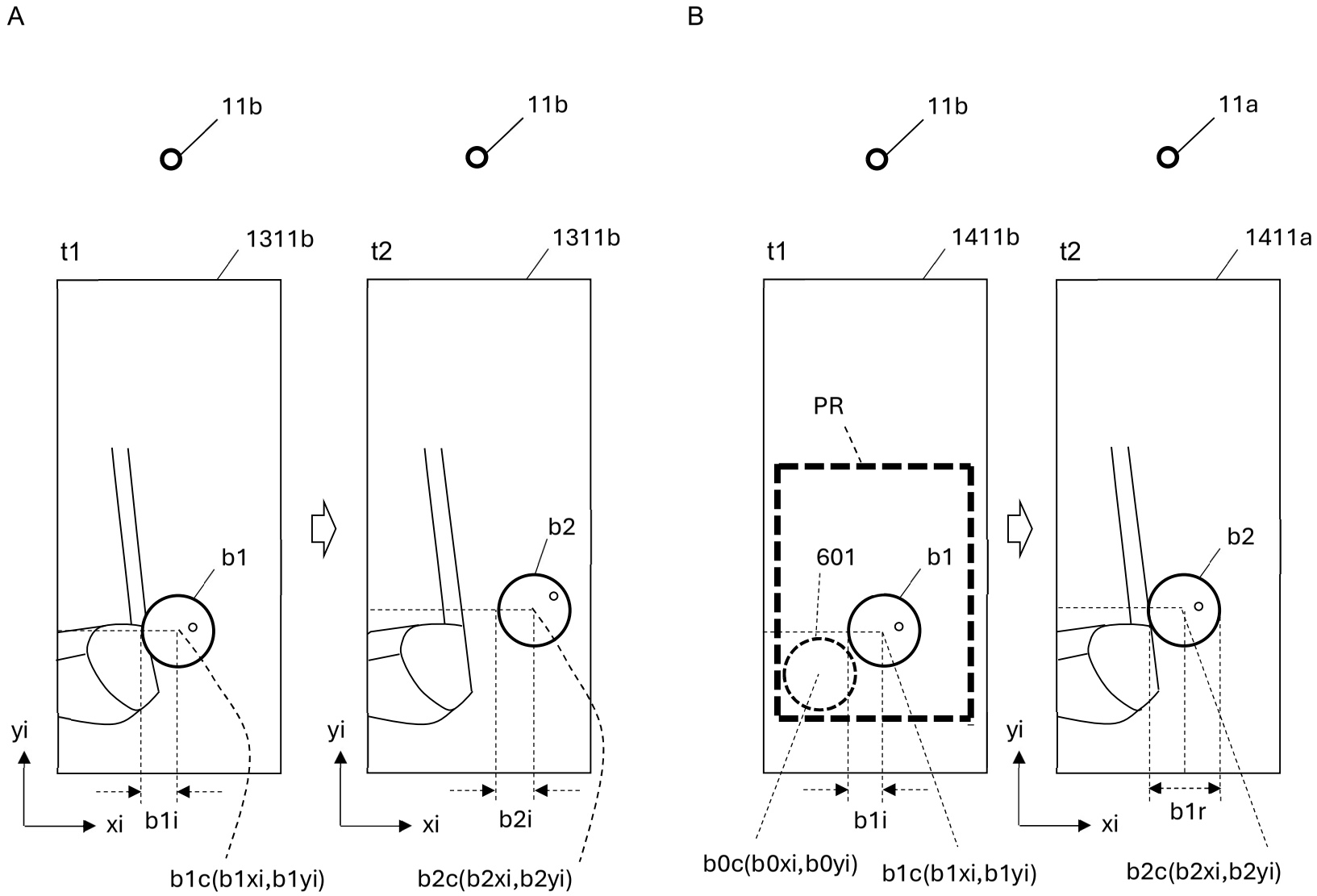
A
11b
11b
t1
1311b
t2
1311b
b1
b2
yi
xi
b1i
b2i
b1c(b1xi,b1yi)
b2c(b2xi,b2yi)
B
11b
11a
t1
1411b
t2
1411a
PR
601
b1
b2
yi
xi
b1i
b1r
b0c(b0xi,b0yi)
b1c(b1xi,b1yi)
b2c(b2xi,b2yi)

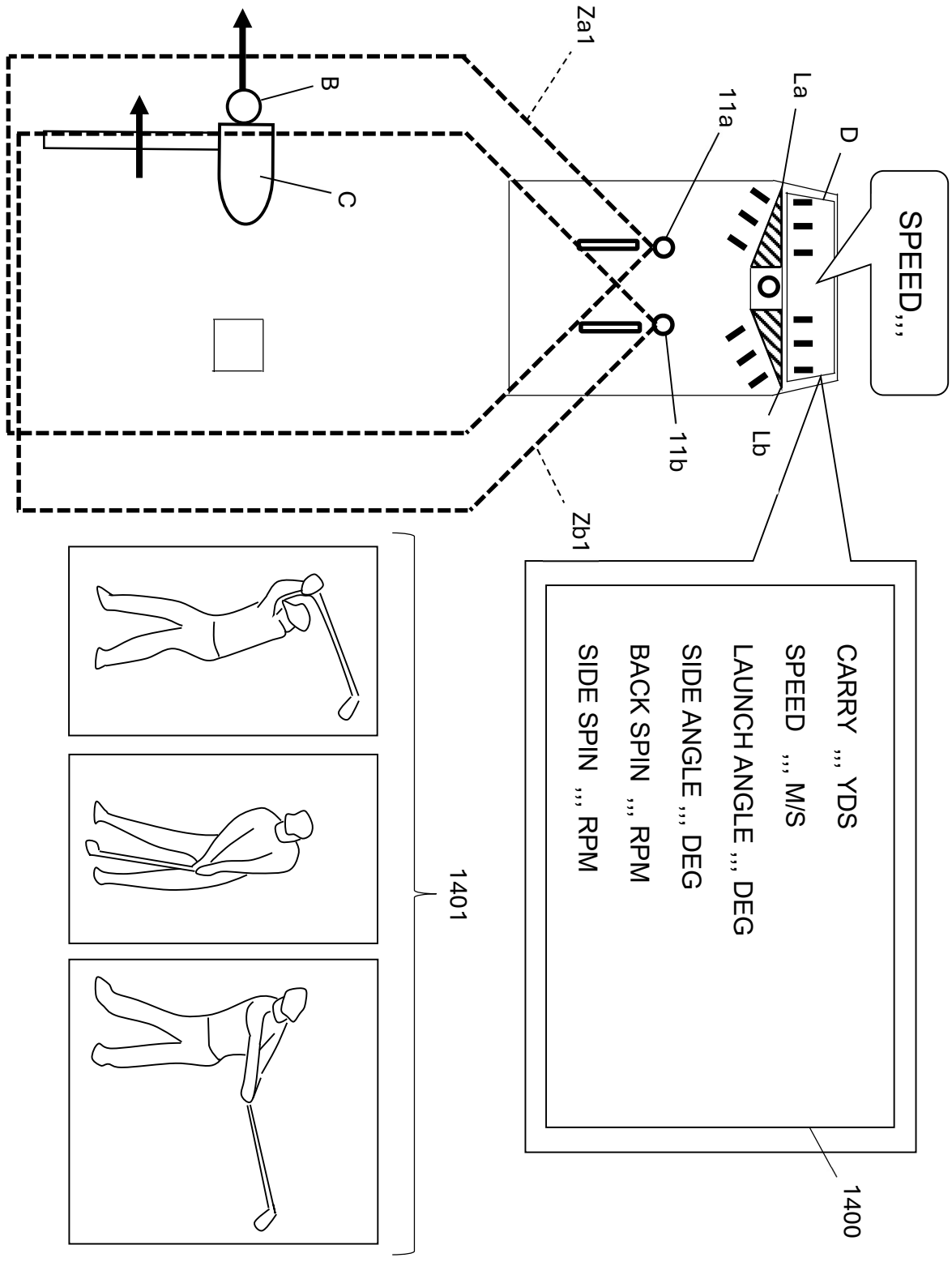
Za1
B
C
11a
La
D
SPEED,,,
11b
Lb
Zb1
CARRY ,,, YDS
SPEED ,,, M/S
LAUNCH ANGLE ,,, DEG
SIDE ANGLE ,,, DEG
BACK SPIN ,,, RPM
SIDE SPIN ,,, RPM
1400
1401

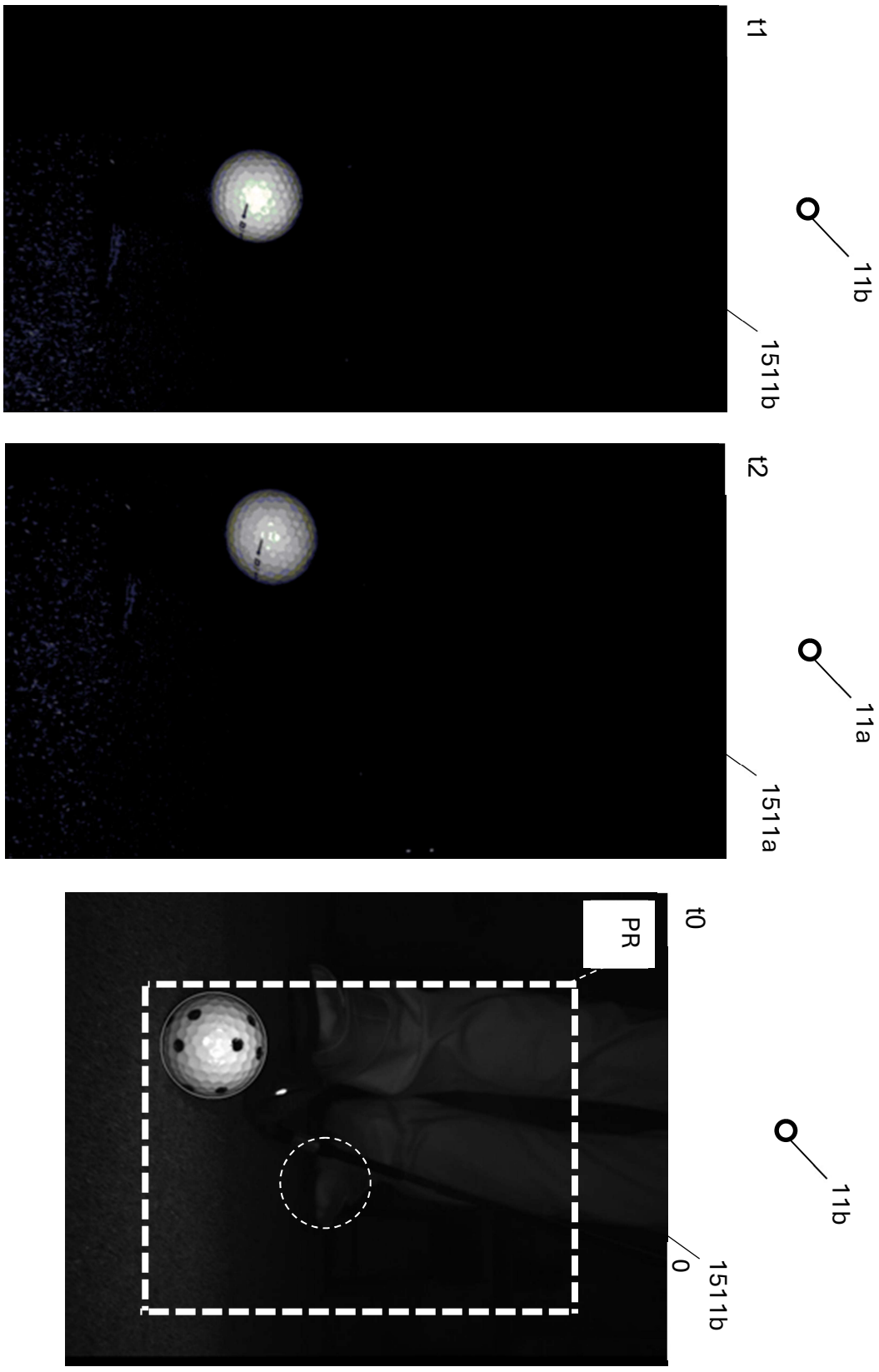
t1
11b
1511b
t2
11a
1511a
t0
PR
11b
1511b
0

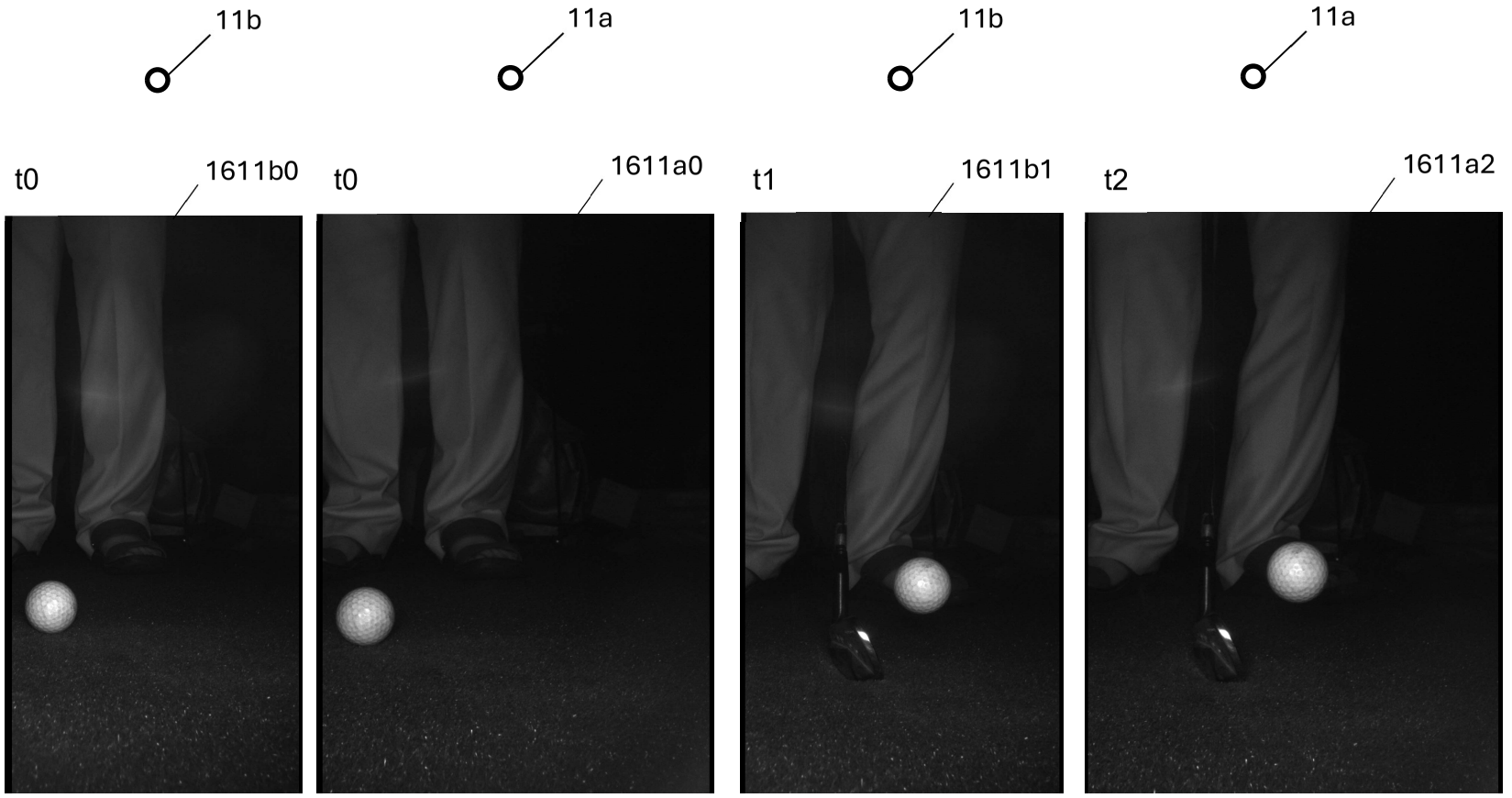

SPEED 28.4 M/S

LAUNCH ANGLE 22.4 DEG

SIDE ANGLE 3.6 DEG

BACK SPIN 3335.1 RPM

SIDE SPIN 487.3 RPM

SPIN AXIS 8.3 RPM

TOTAL SPIN 3370.5 RPM