Figure 1

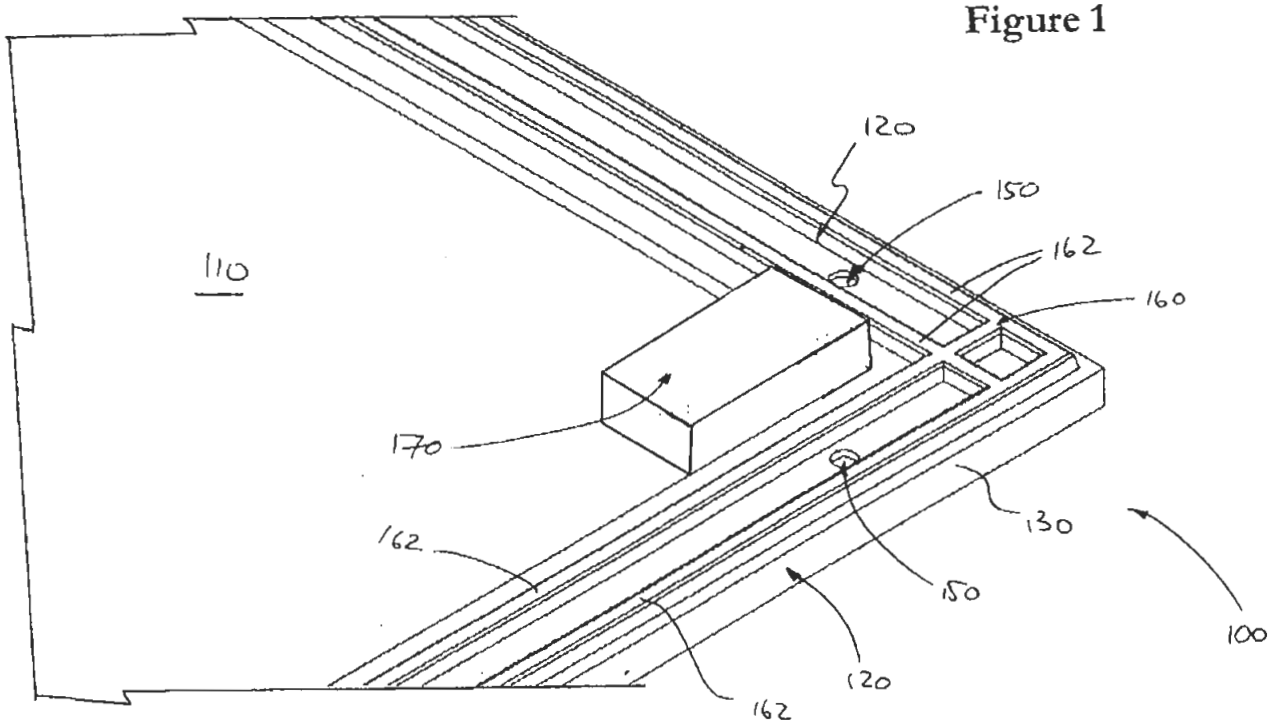


Figure 2

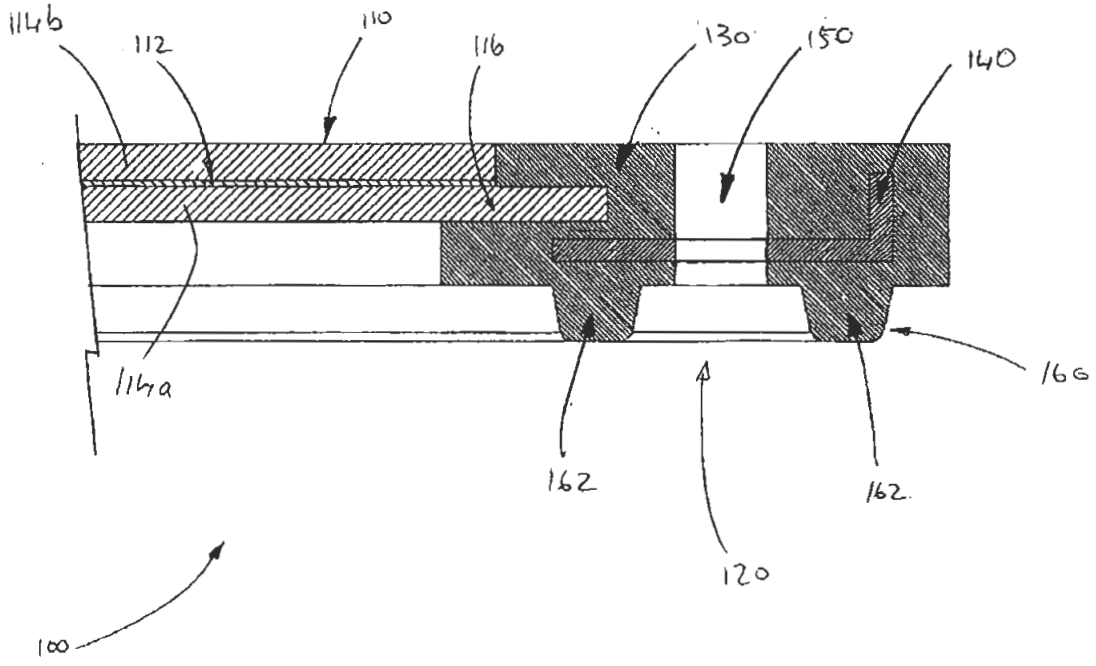

Figure 3

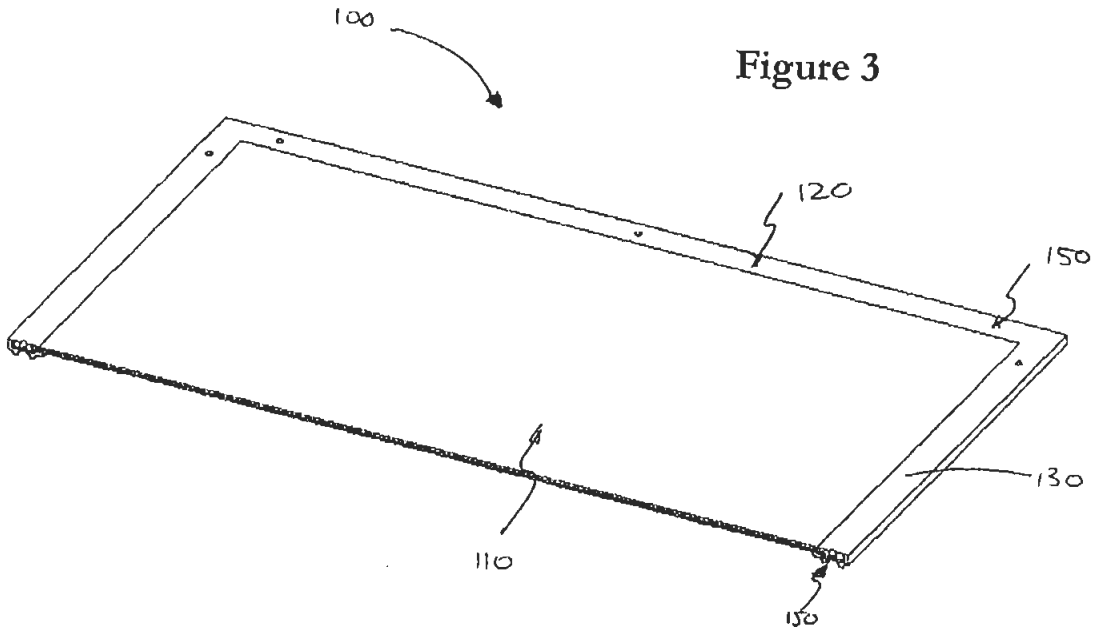


Figure 4

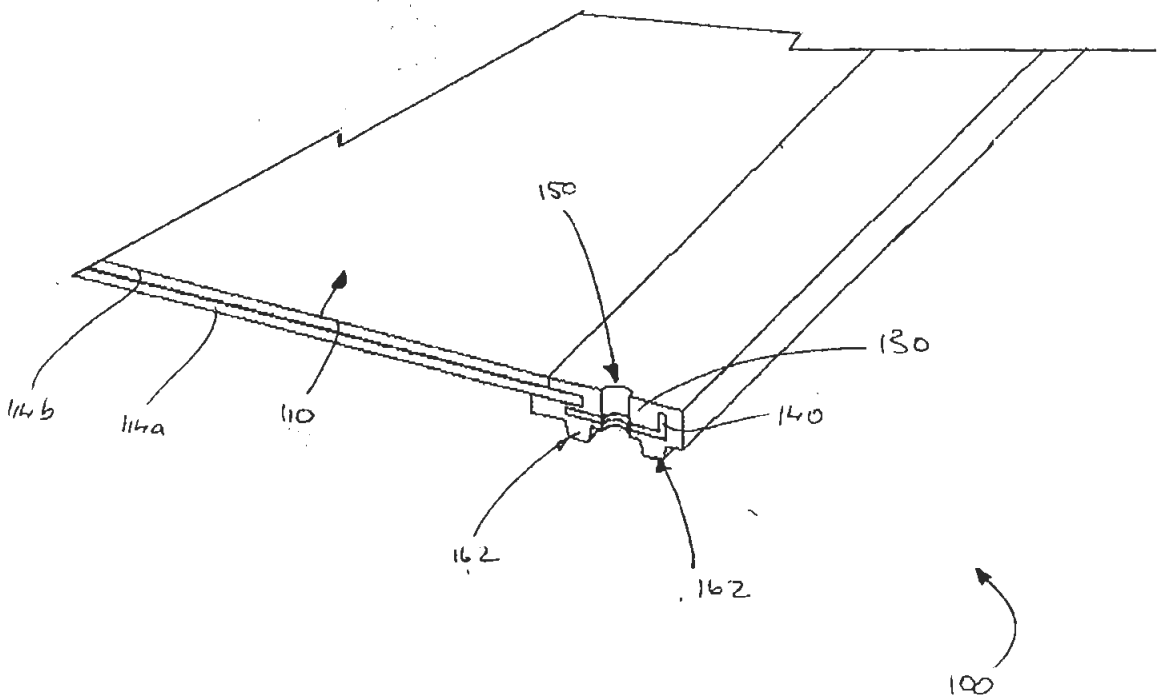

Figure 5

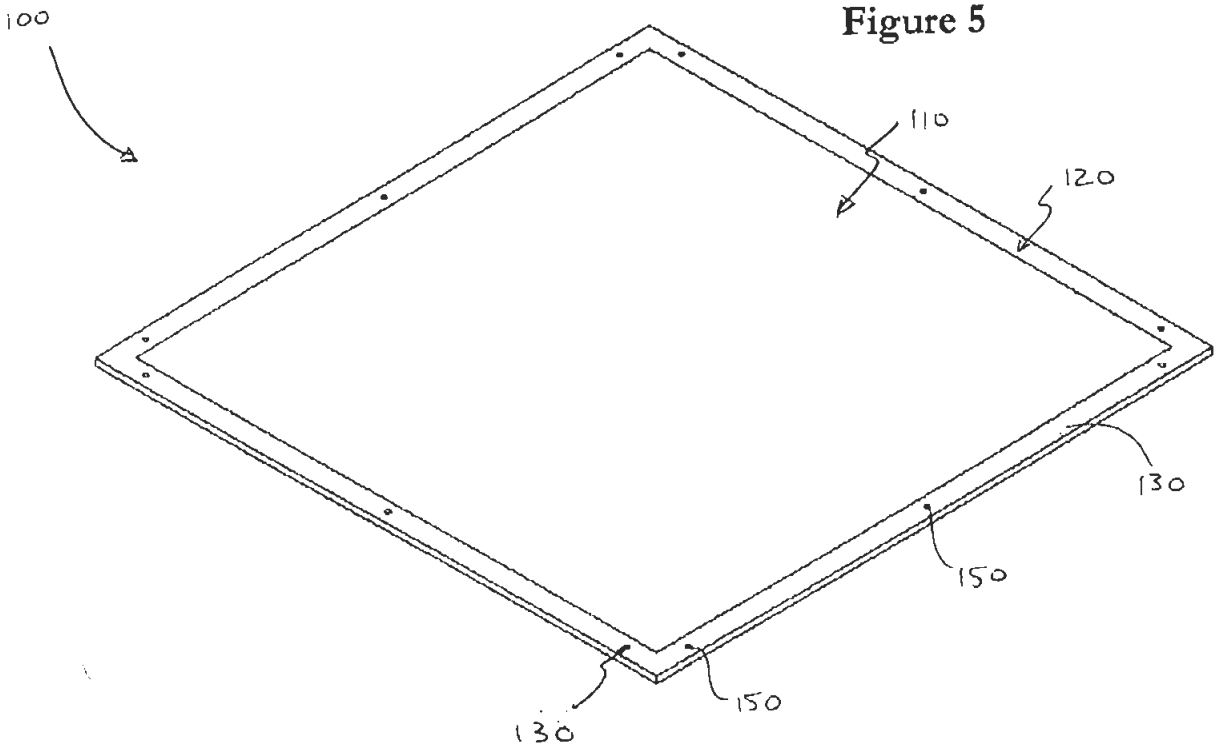


Figure 6

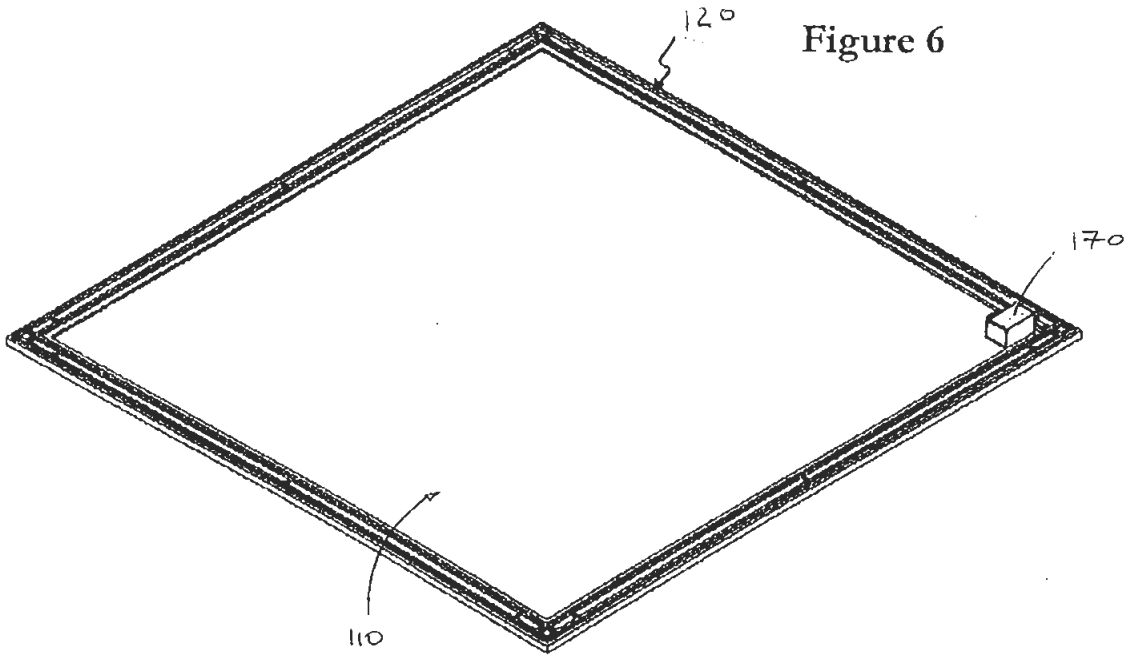

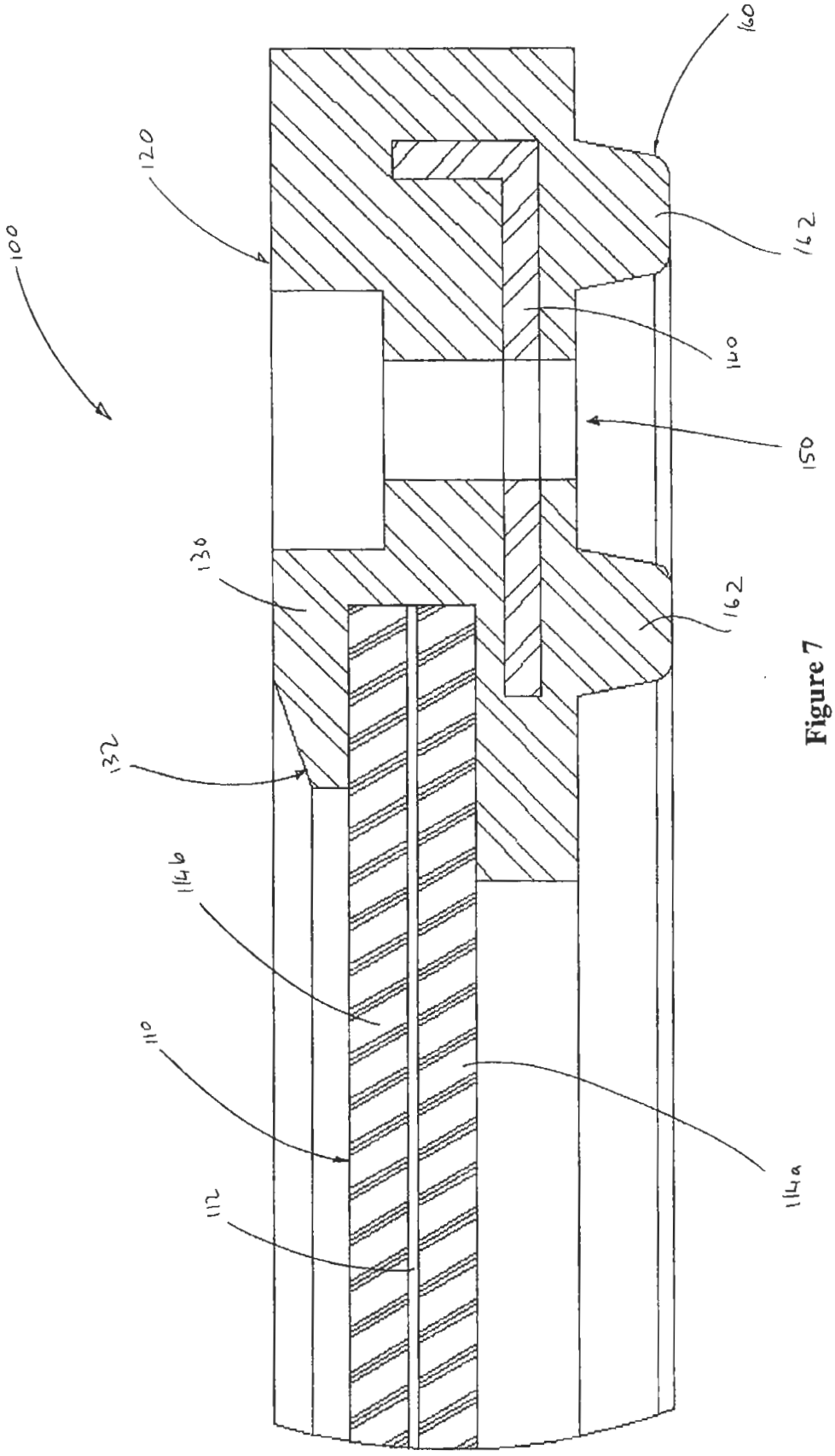


Figure 7

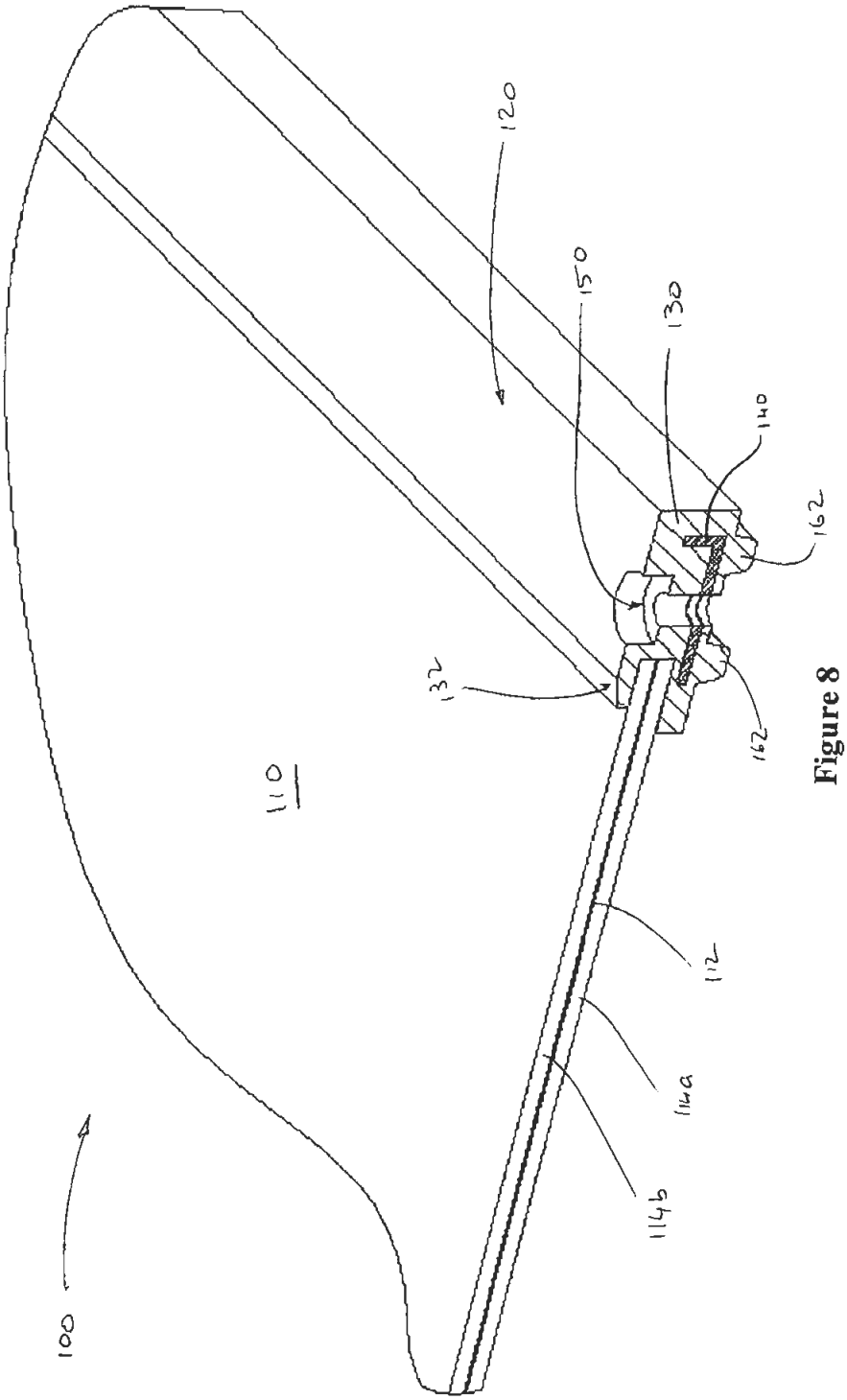


Figure 8

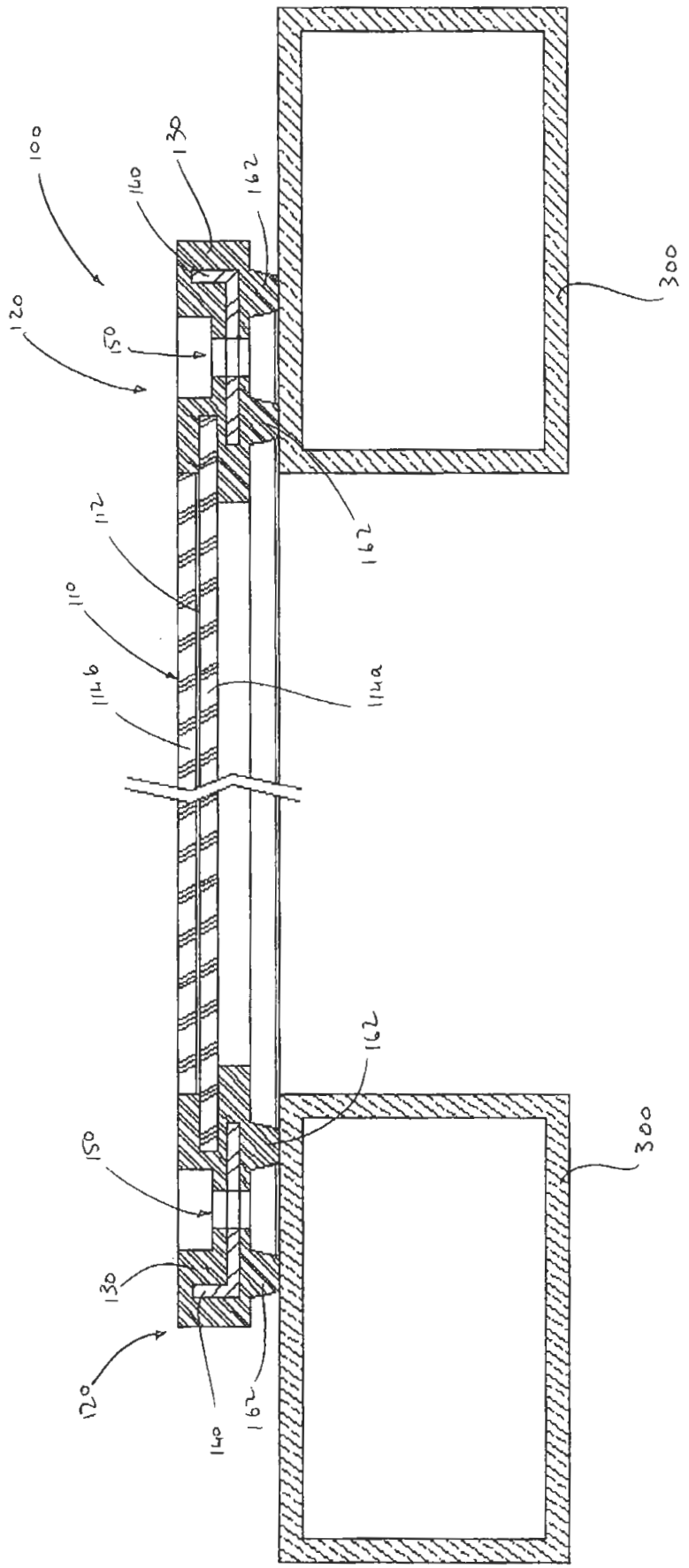
100
160
130
162
300
120
150
117
110
114b
114a
162
150
300
130
120
140
162

Figure 9

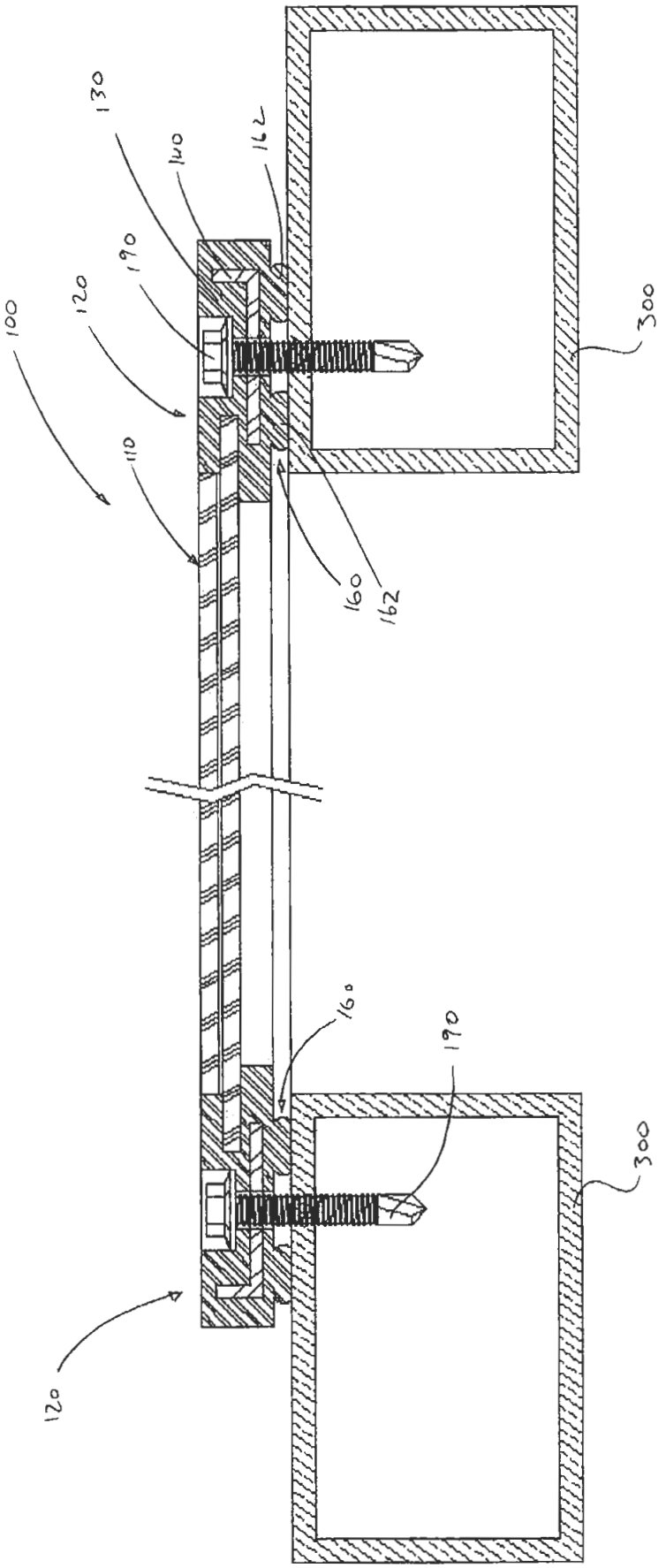


Figure 10

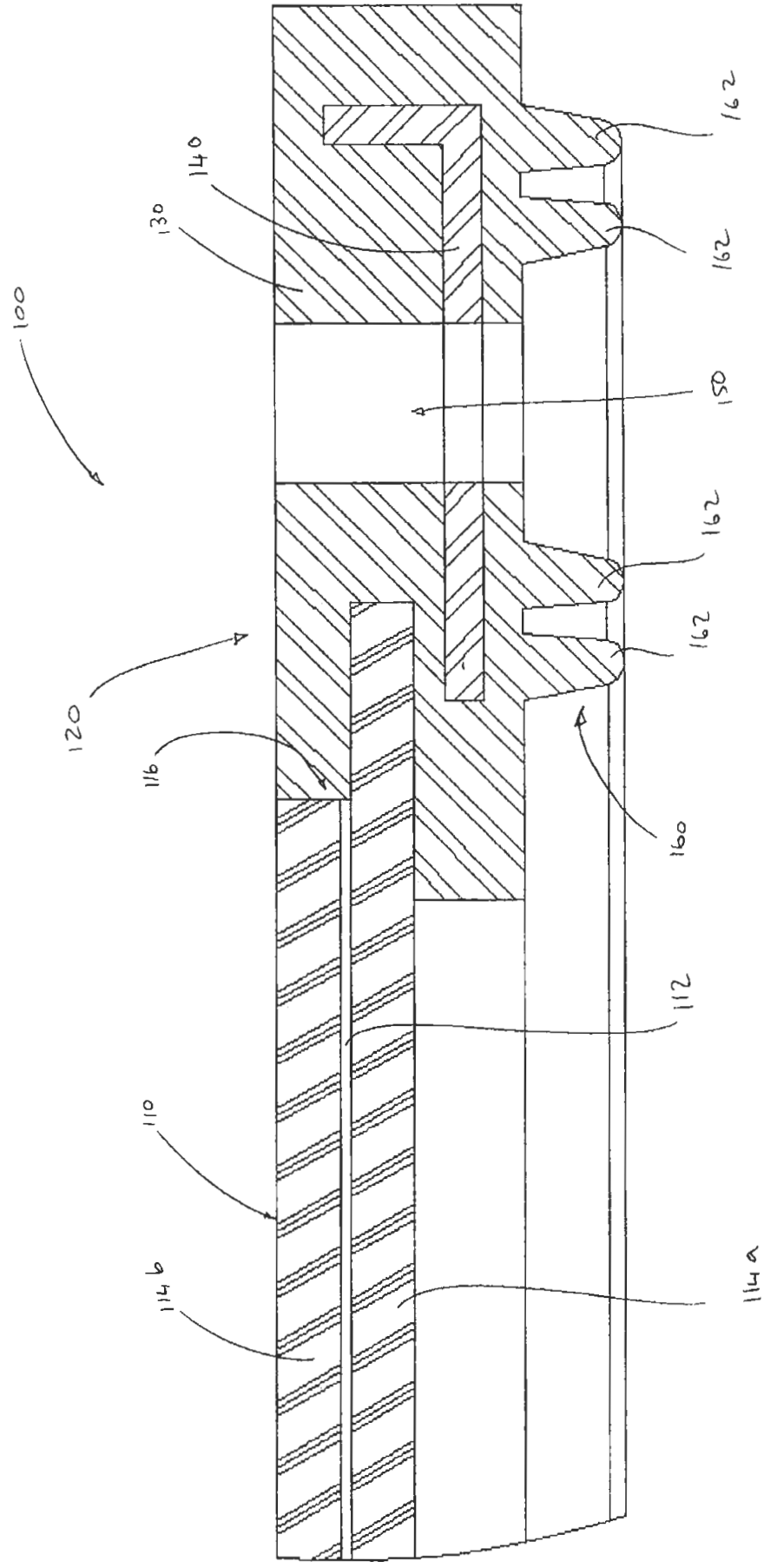


Figure 11

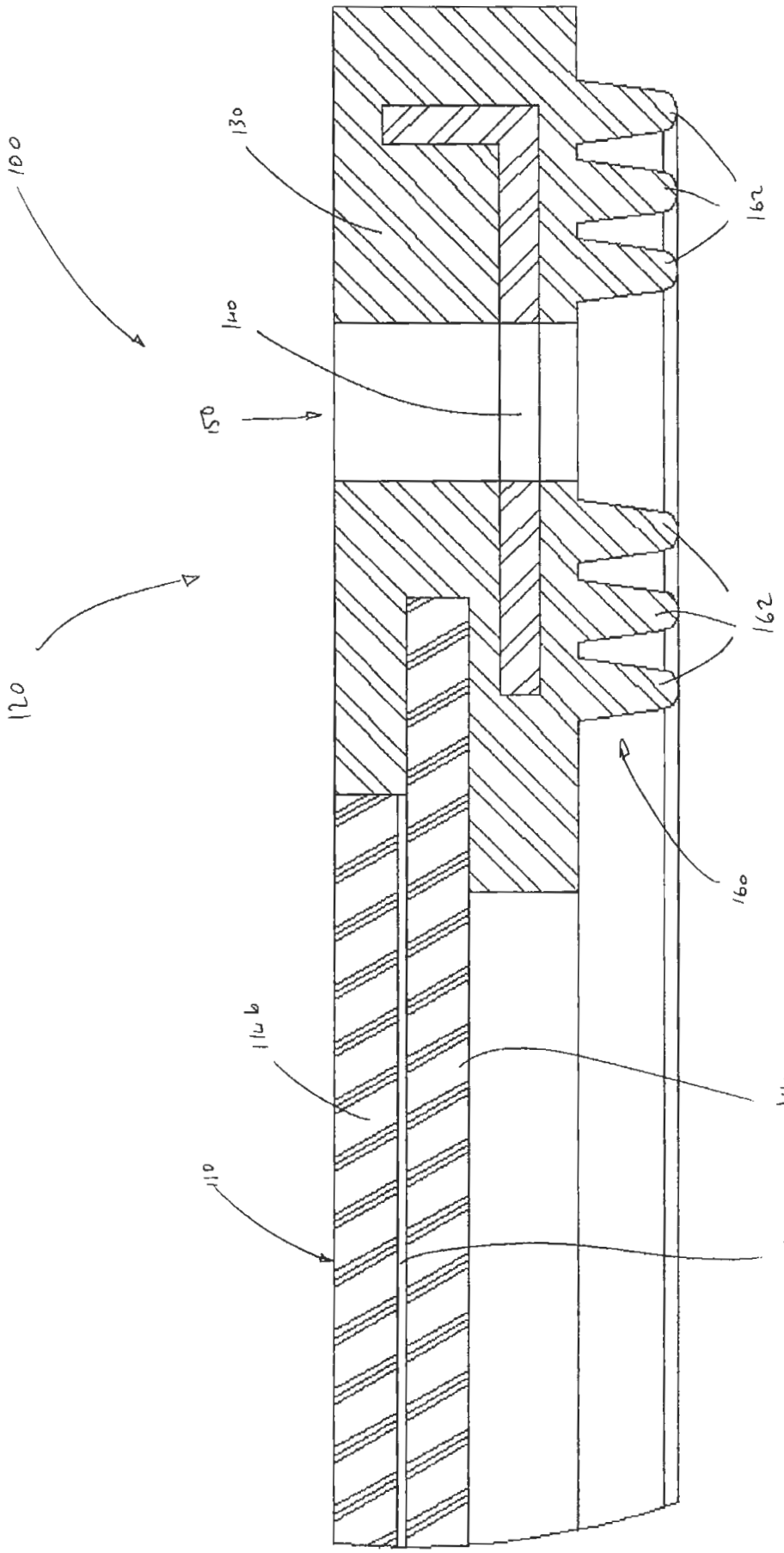


Figure 12

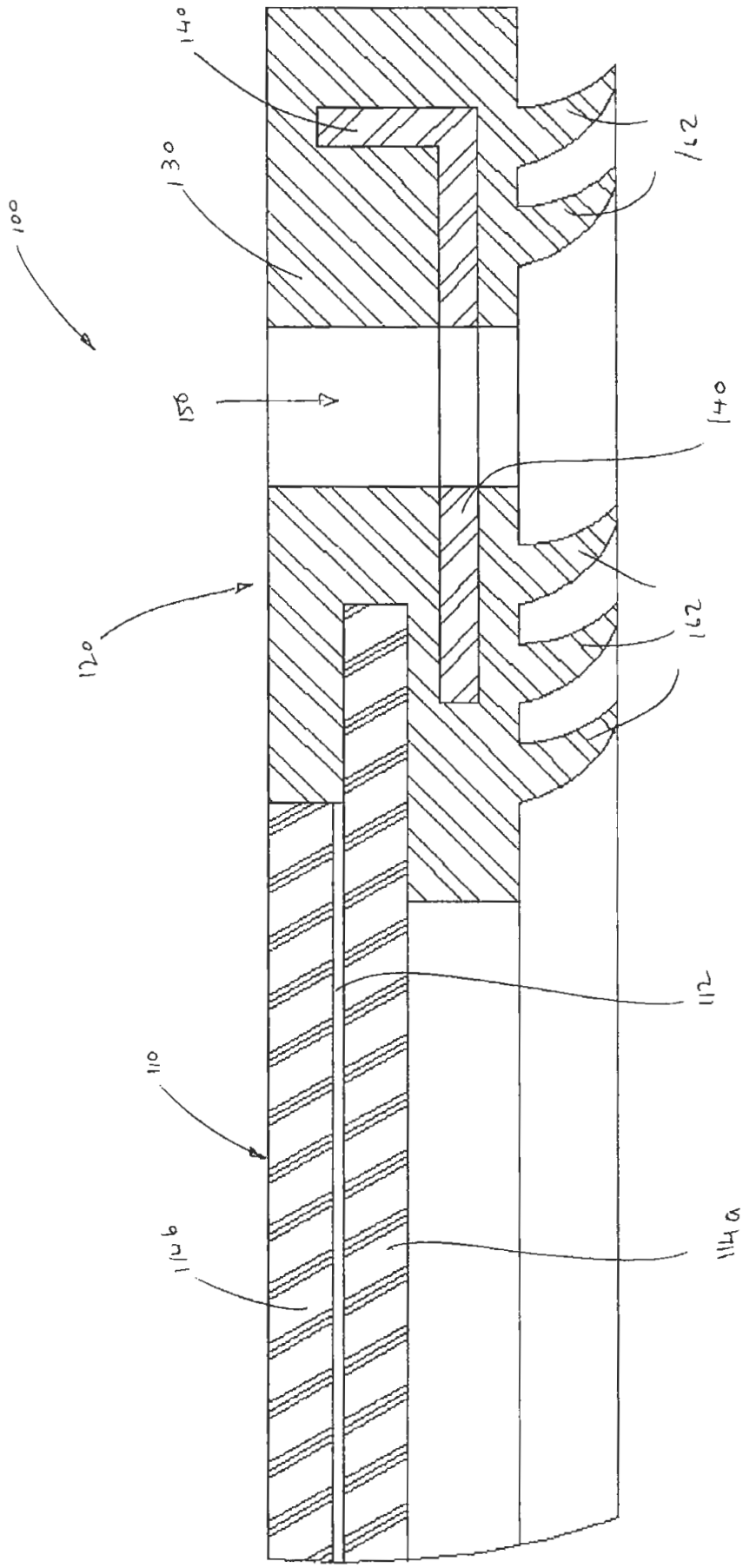


Figure 13

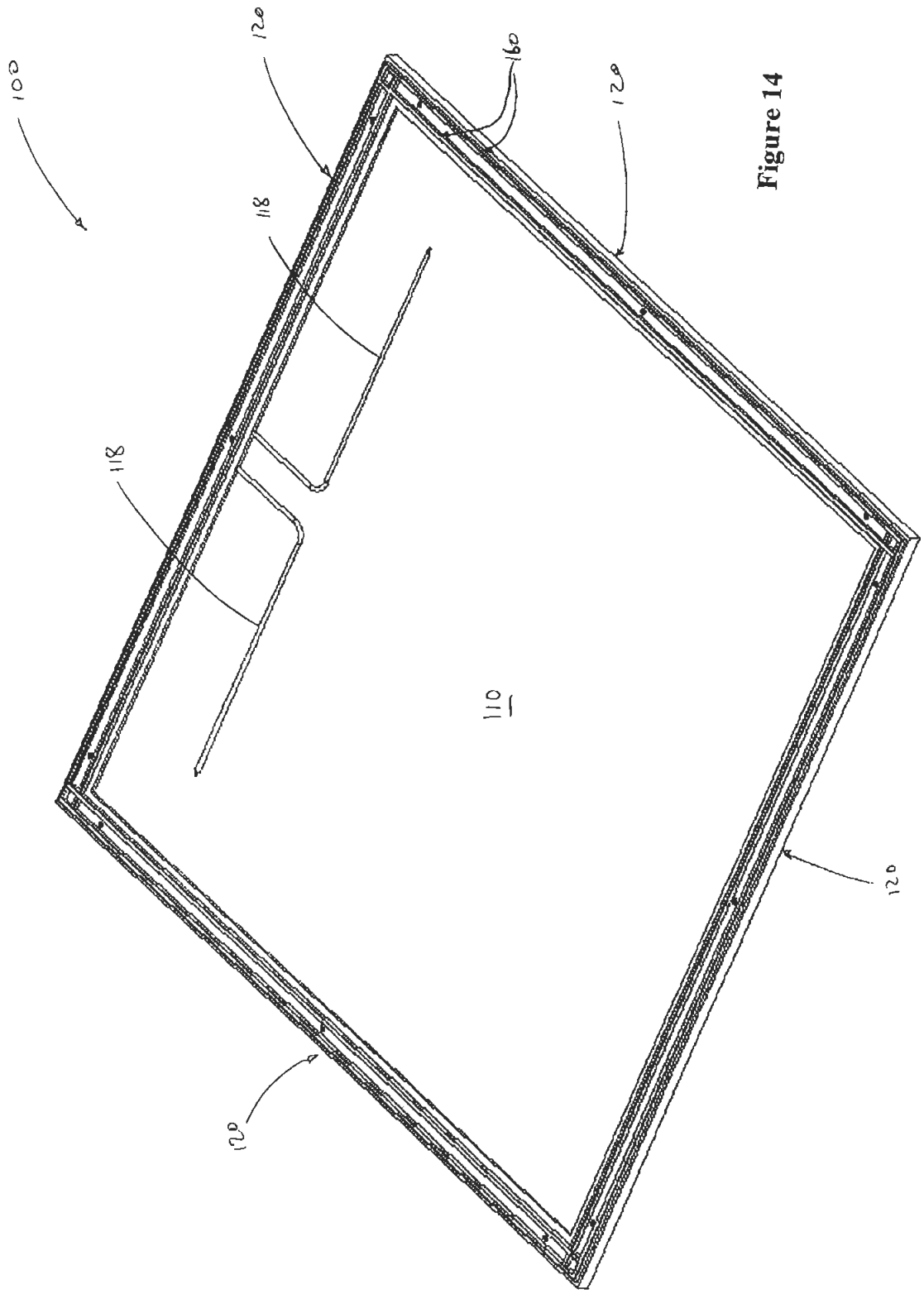


Figure 14

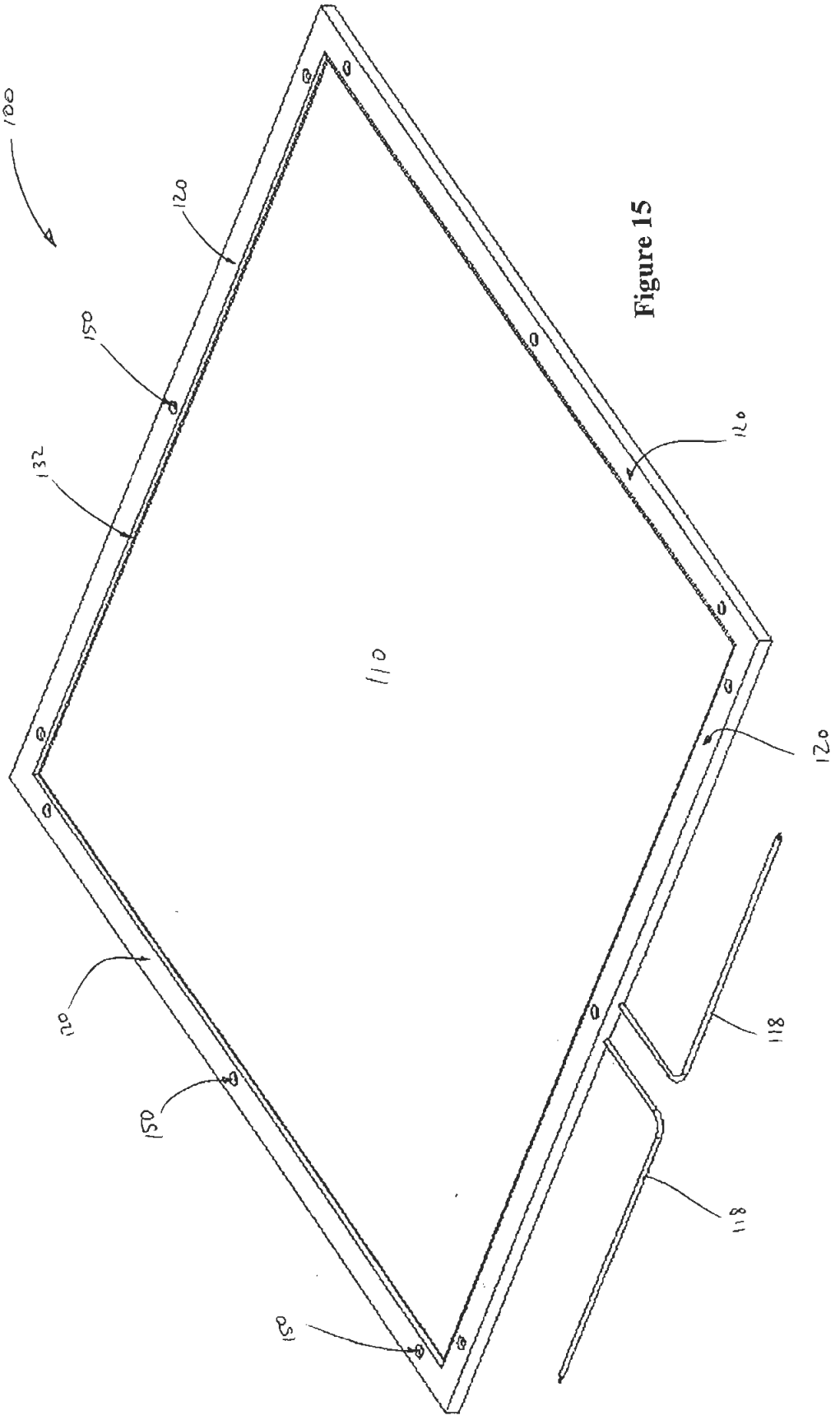


Figure 15

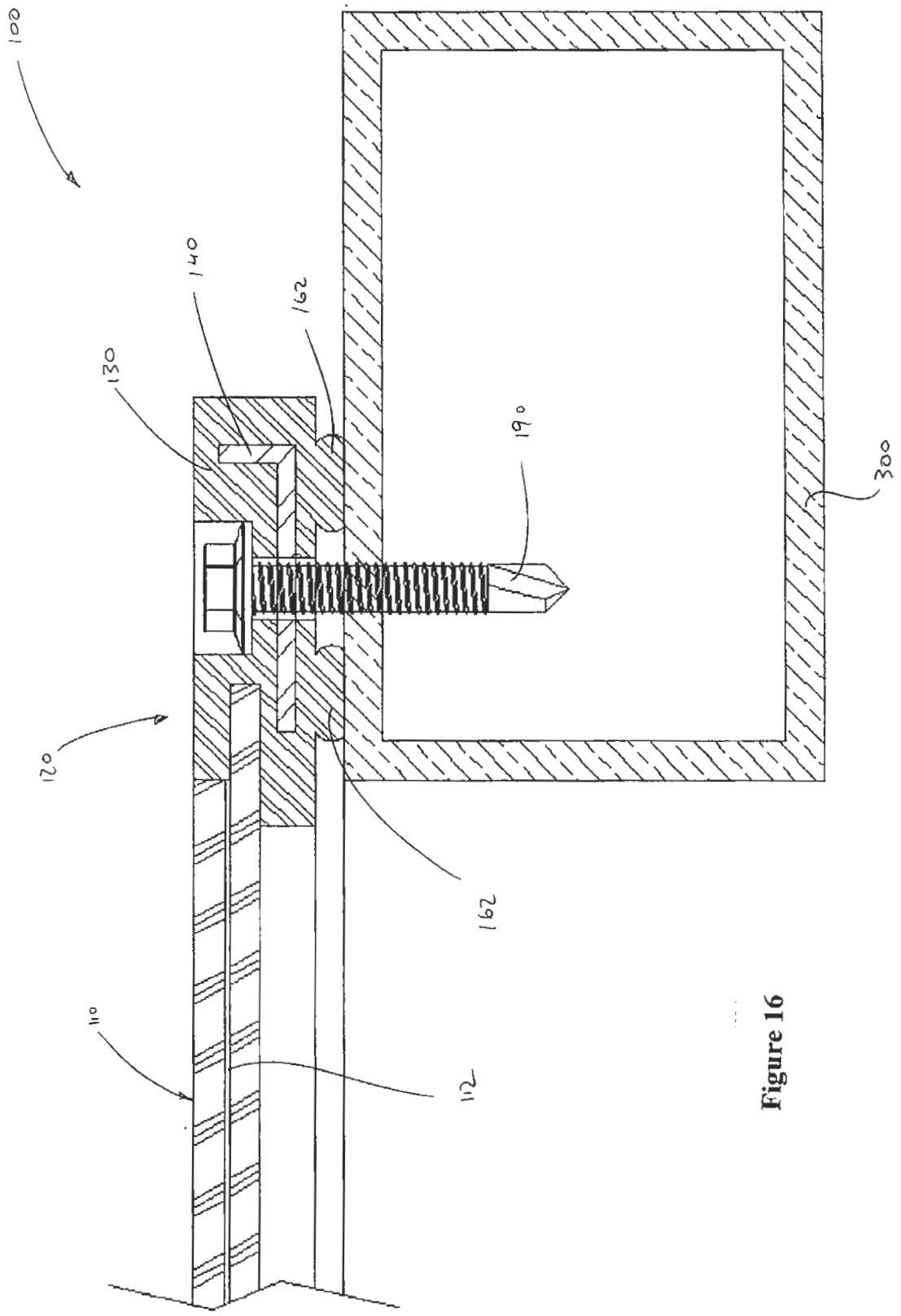


Figure 16

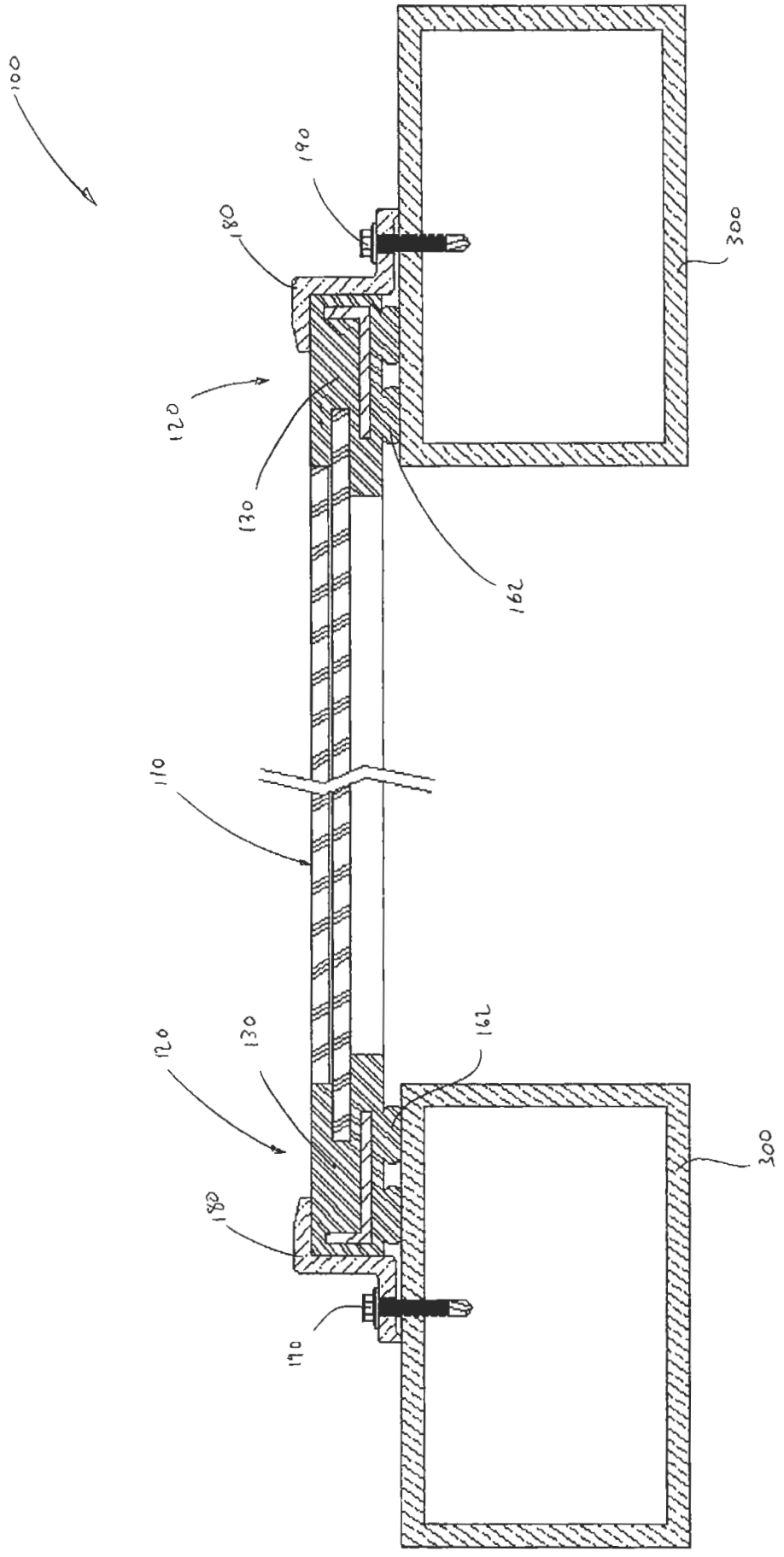


Figure 17

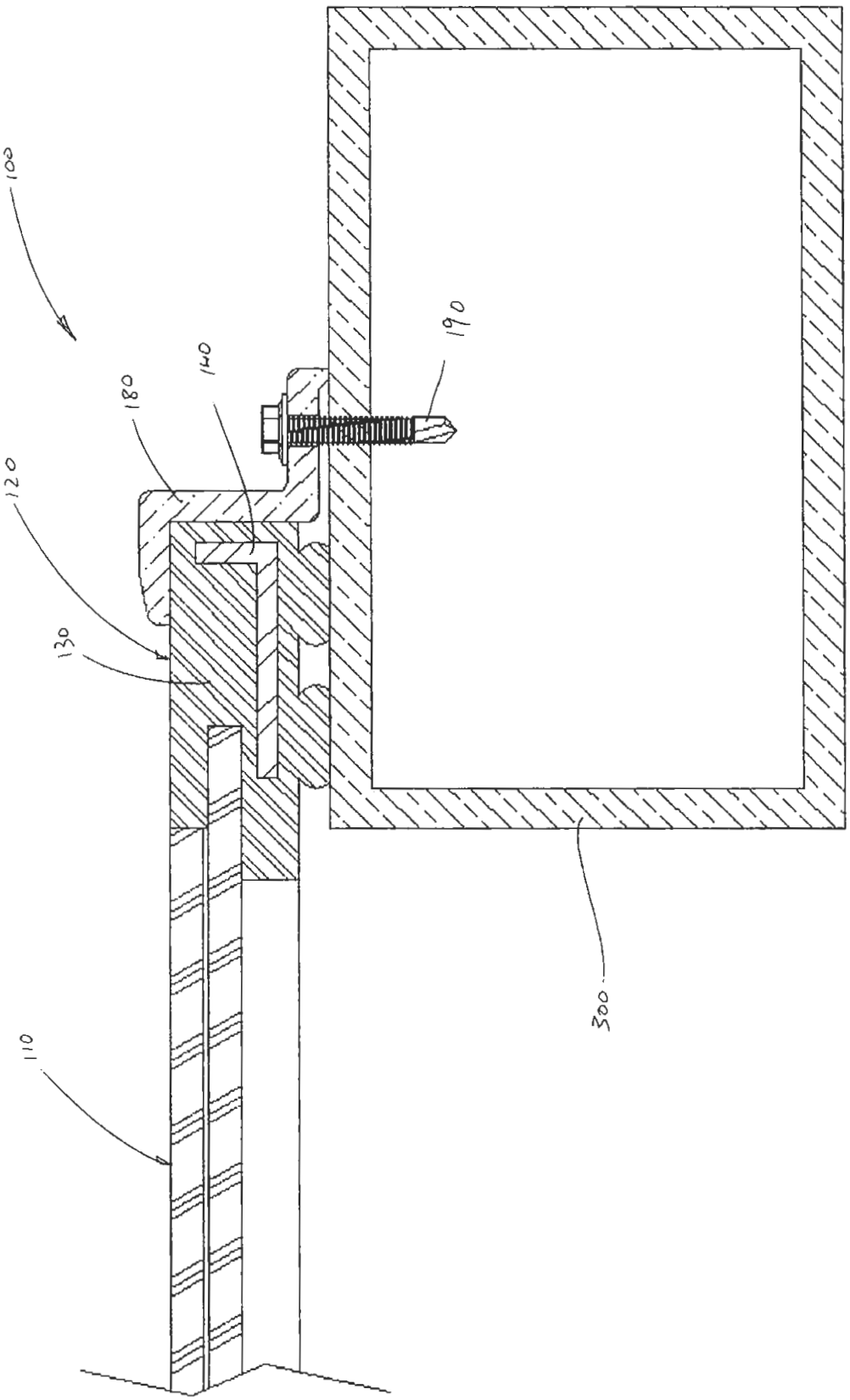


Figure 18