Fig.1

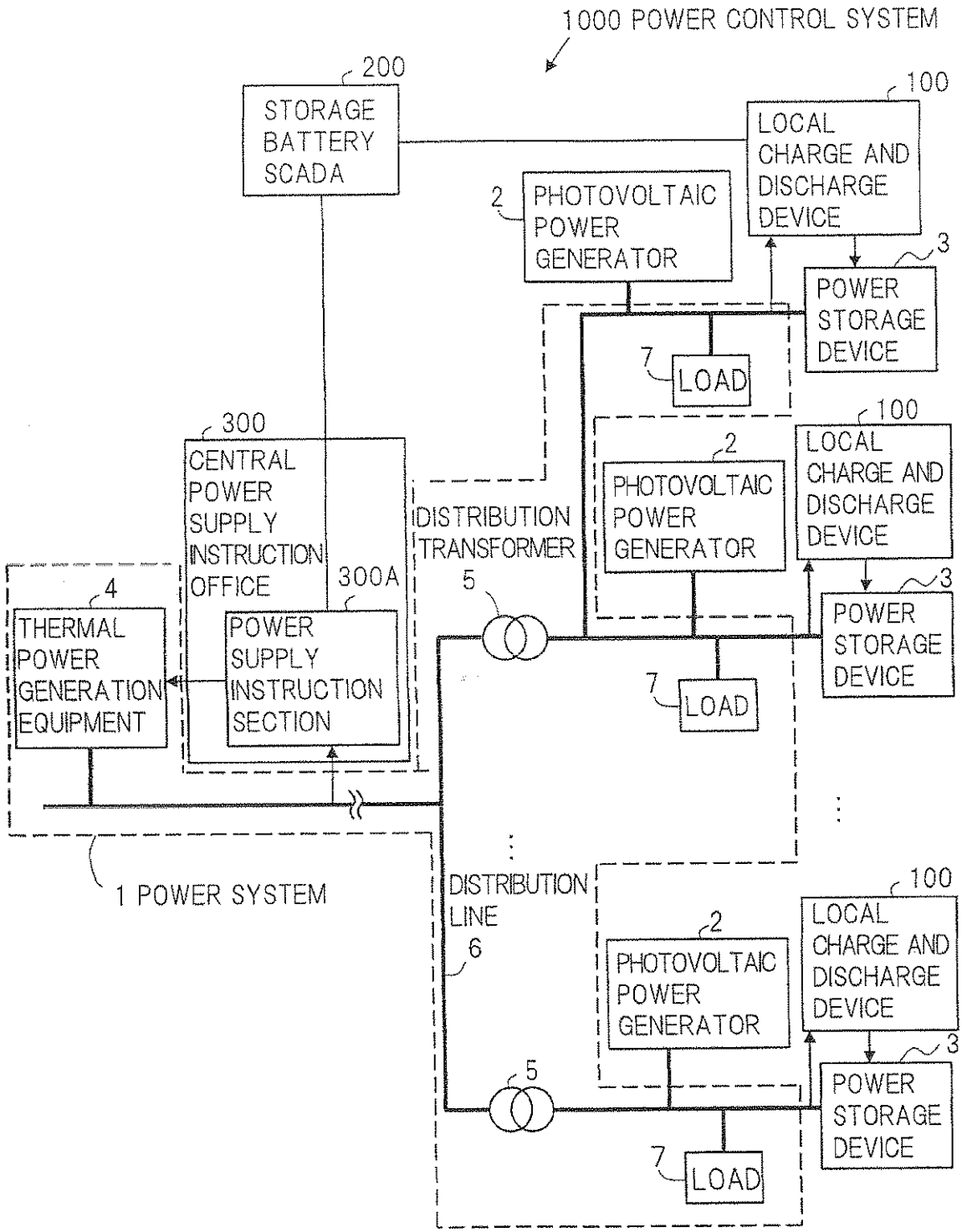
1000 POWER CONTROL SYSTEM
200
STORAGE BATTERY SCADA
100
LOCAL CHARGE AND DISCHARGE DEVICE
2
PHOTOVOLTAIC POWER GENERATOR
3
POWER STORAGE DEVICE
7
LOAD
300
CENTRAL POWER SUPPLY INSTRUCTION OFFICE
300A
POWER SUPPLY INSTRUCTION SECTION
4
THERMAL POWER GENERATION EQUIPMENT
DISTRIBUTION TRANSFORMER
5
1 POWER SYSTEM
DISTRIBUTION LINE
6

Fig.2

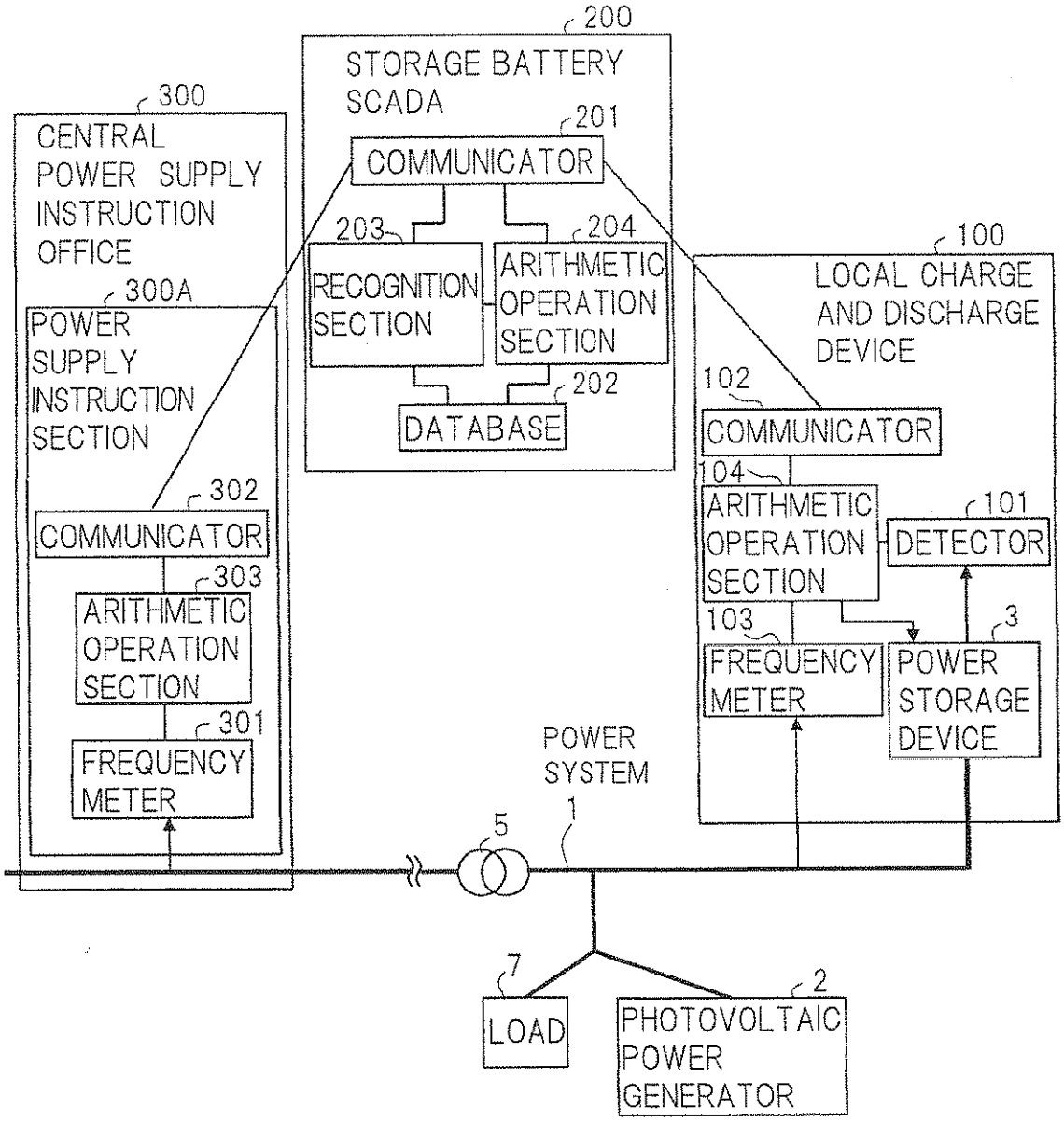
200
STORAGE BATTERY SCADA
201
COMMUNICATOR
203
RECOGNITION SECTION
204
ARITHMETIC OPERATION SECTION
202
DATABASE
300
CENTRAL POWER SUPPLY INSTRUCTION OFFICE
300A
POWER SUPPLY INSTRUCTION SECTION
302
COMMUNICATOR
303
ARITHMETIC OPERATION SECTION
301
FREQUENCY METER
100
LOCAL CHARGE AND DISCHARGE DEVICE
102
COMMUNICATOR
104
ARITHMETIC OPERATION SECTION
101
DETECTOR
103
FREQUENCY METER
3
POWER STORAGE DEVICE
POWER SYSTEM
1
5
7
LOAD
2
PHOTOVOLTAIC POWER GENERATOR

Fig.3A

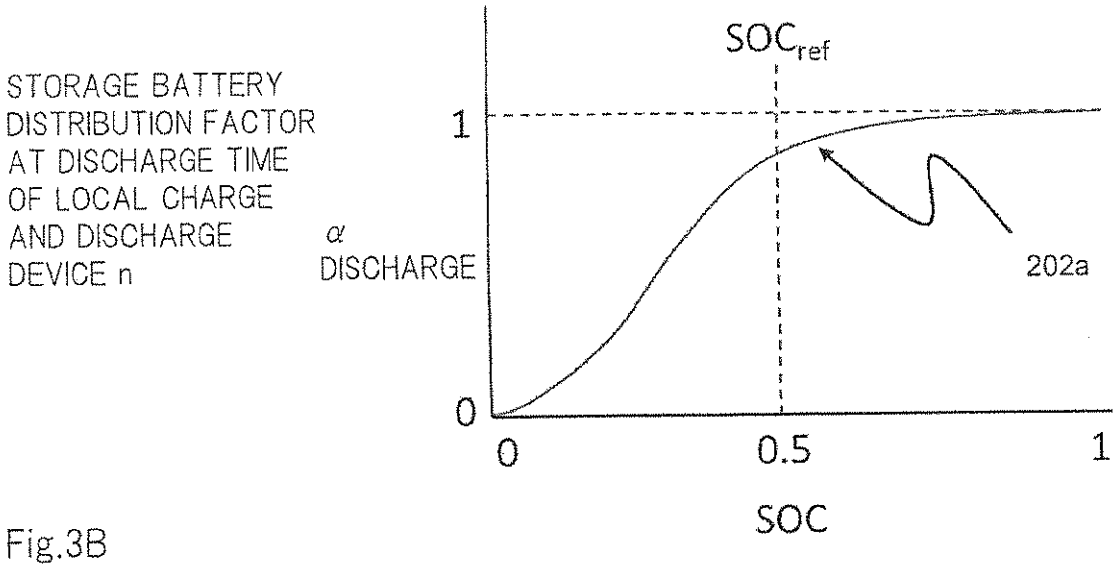
STORAGE BATTERY DISTRIBUTION FACTOR AT DISCHARGE TIME OF LOCAL CHARGE AND DISCHARGE DEVICE n
α DISCHARGE
SOC$_{ref}$
1
0
0
0.5
1
SOC
202a

Fig.3B

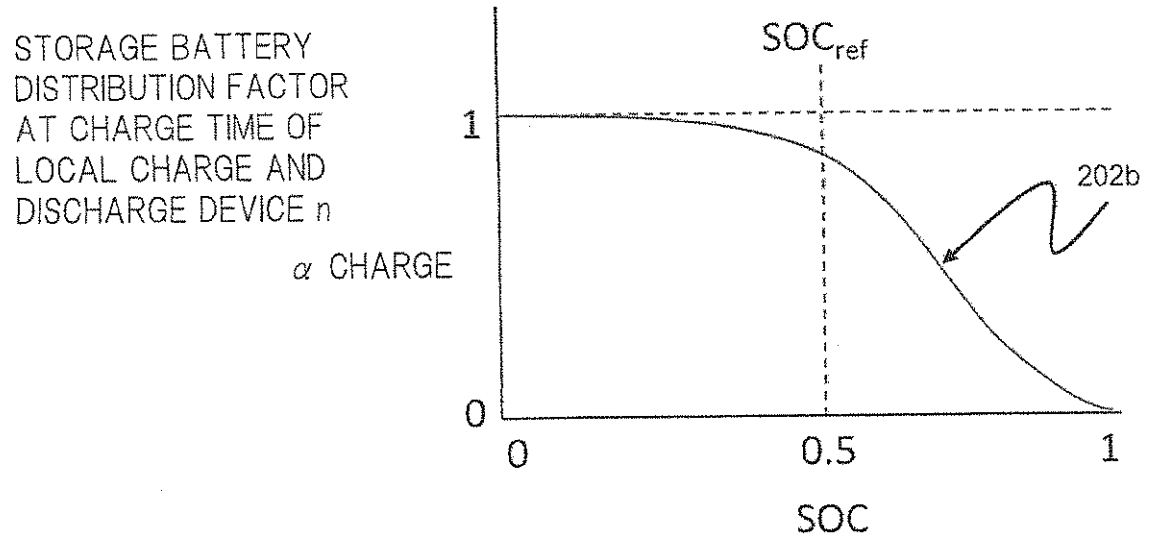
STORAGE BATTERY DISTRIBUTION FACTOR AT CHARGE TIME OF LOCAL CHARGE AND DISCHARGE DEVICE n
α CHARGE
SOC$_{ref}$
1
0
0
0.5
1
SOC
202b

Fig.4

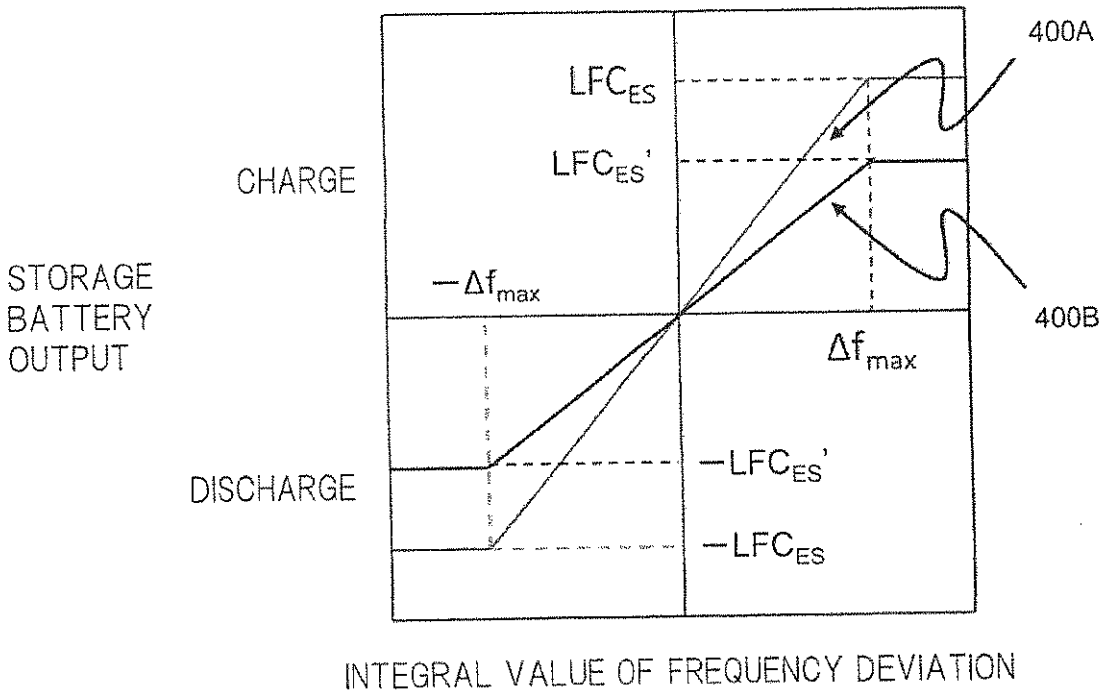
400A
LFC$_{ES}$
LFC$_{ES}$'
CHARGE
STORAGE BATTERY OUTPUT
$-\Delta f_{max}$
400B
Δf_{max}
DISCHARGE
$-$LFC$_{ES}$'
$-$LFC$_{ES}$
INTEGRAL VALUE OF FREQUENCY DEVIATION

Fig.5

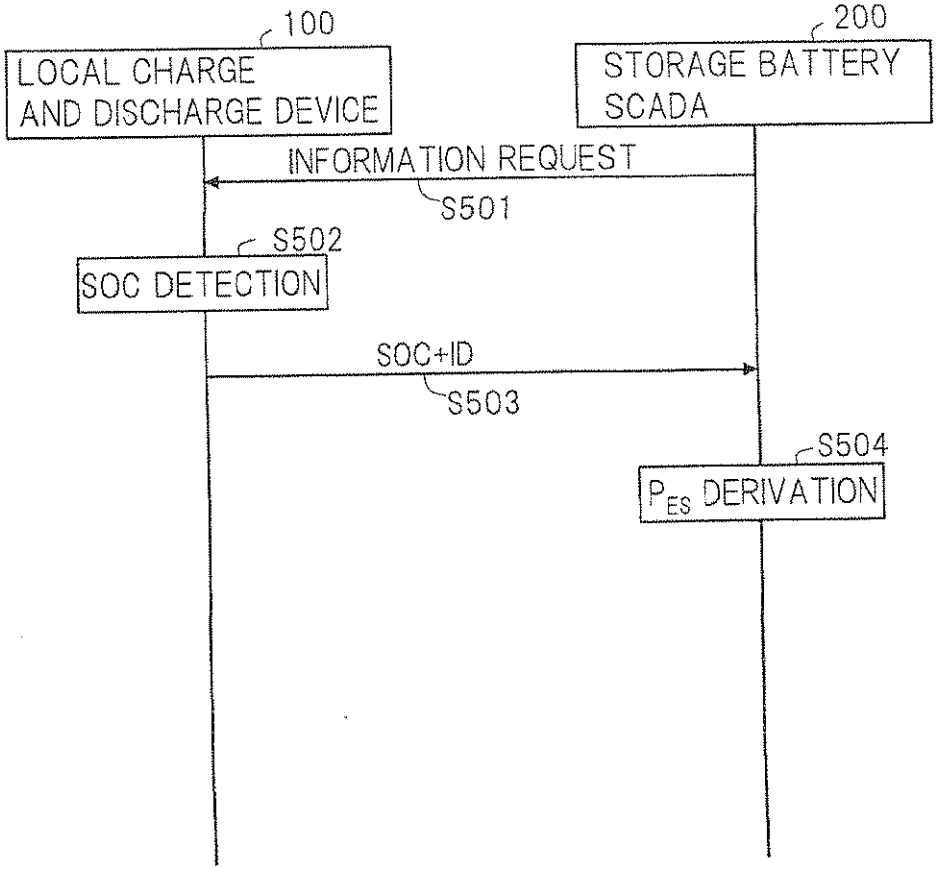
100
LOCAL CHARGE AND DISCHARGE DEVICE
200
STORAGE BATTERY SCADA
INFORMATION REQUEST
S501
S502
SOC DETECTION
SOC+ID
S503
S504
P_{ES} DERIVATION

Fig.6

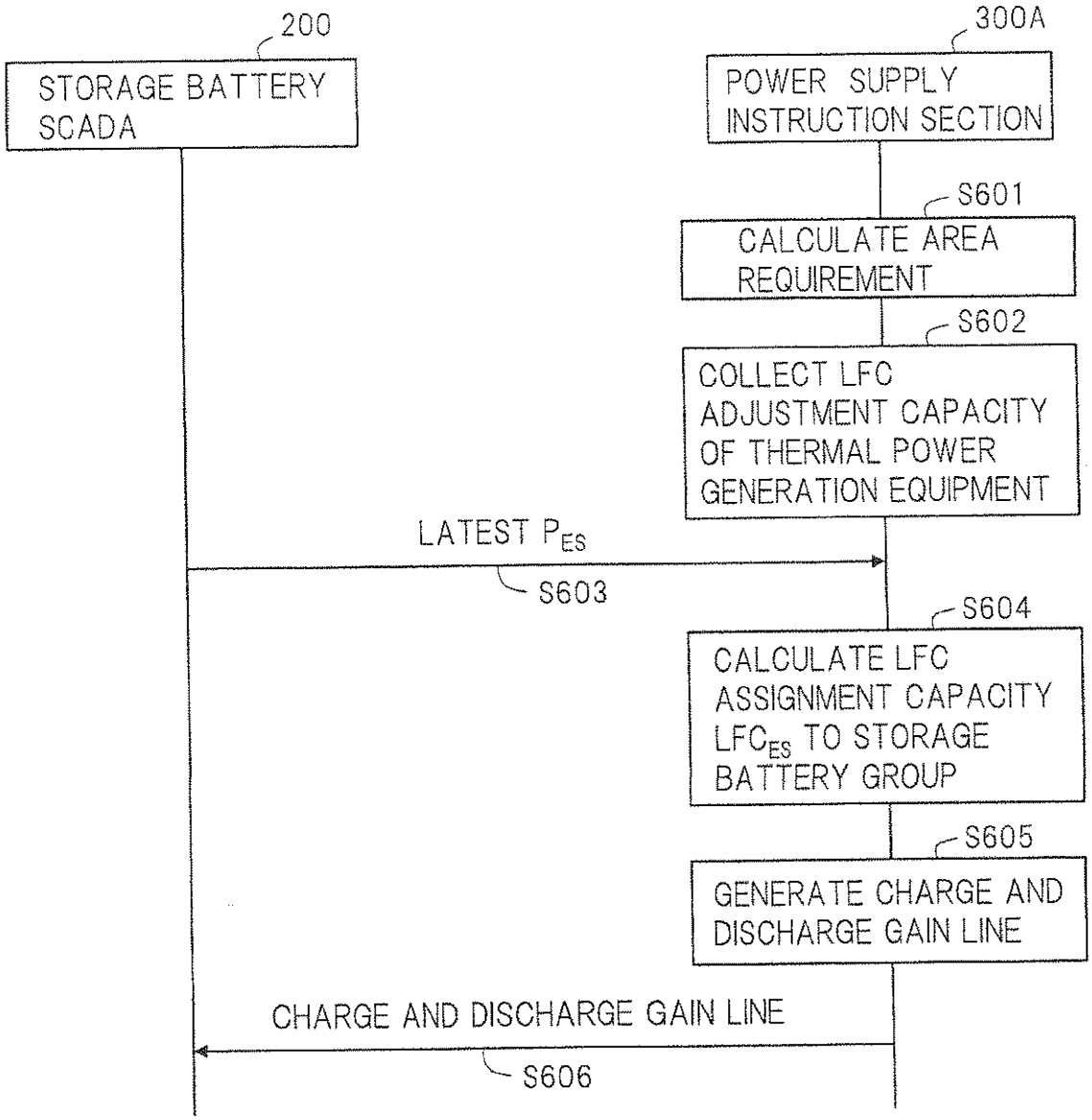
200
STORAGE BATTERY SCADA
300A
POWER SUPPLY INSTRUCTION SECTION
S601
CALCULATE AREA REQUIREMENT
S602
COLLECT LFC ADJUSTMENT CAPACITY OF THERMAL POWER GENERATION EQUIPMENT
LATEST P_{ES}
S603
S604
CALCULATE LFC ASSIGNMENT CAPACITY LFC_{ES} TO STORAGE BATTERY GROUP
S605
GENERATE CHARGE AND DISCHARGE GAIN LINE
CHARGE AND DISCHARGE GAIN LINE
S606

Fig.7

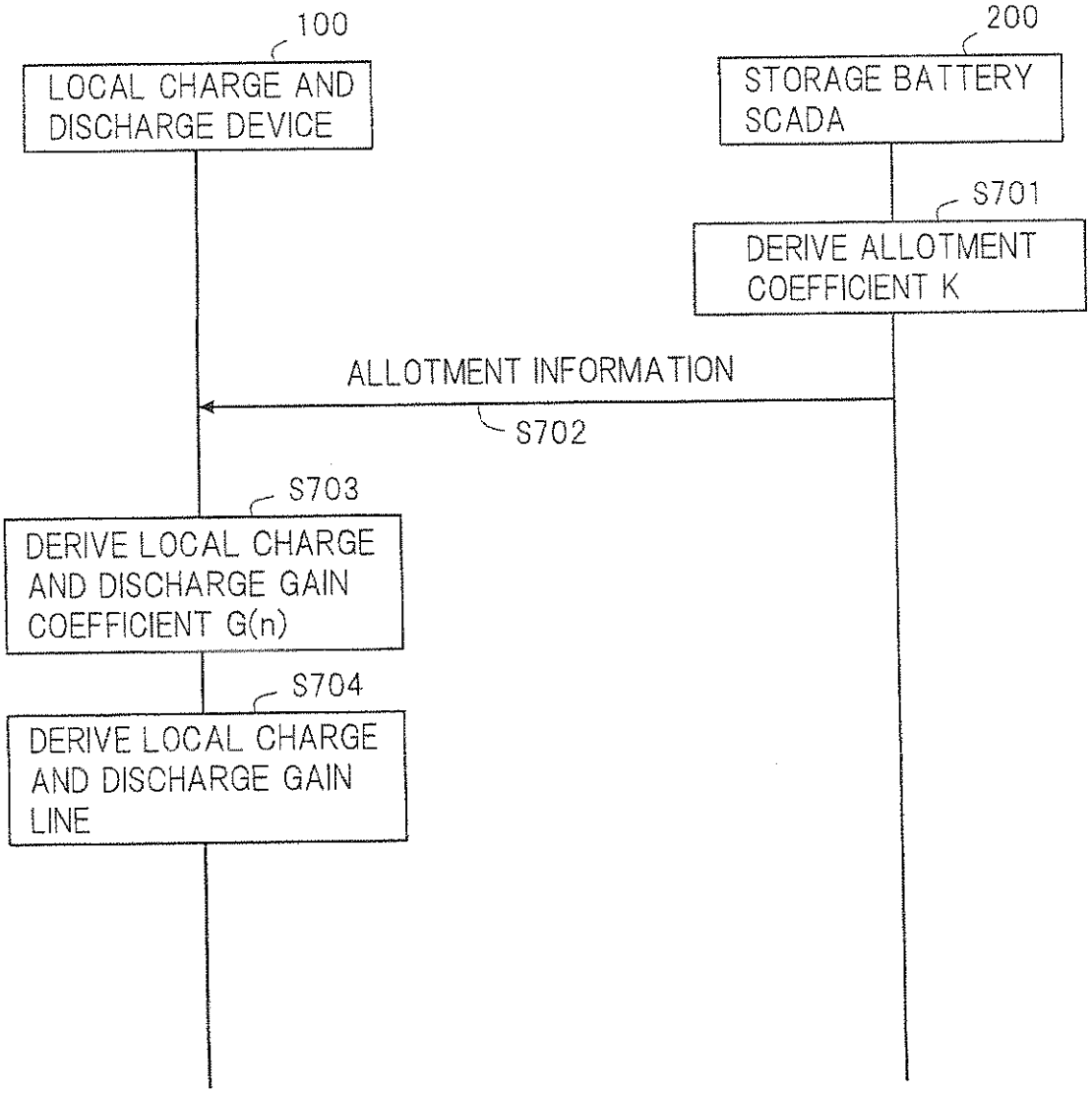
100
LOCAL CHARGE AND DISCHARGE DEVICE
200
STORAGE BATTERY SCADA
S701
DERIVE ALLOTMENT COEFFICIENT K
ALLOTMENT INFORMATION
S702
S703
DERIVE LOCAL CHARGE AND DISCHARGE GAIN COEFFICIENT G(n)
S704
DERIVE LOCAL CHARGE AND DISCHARGE GAIN LINE

Fig.8

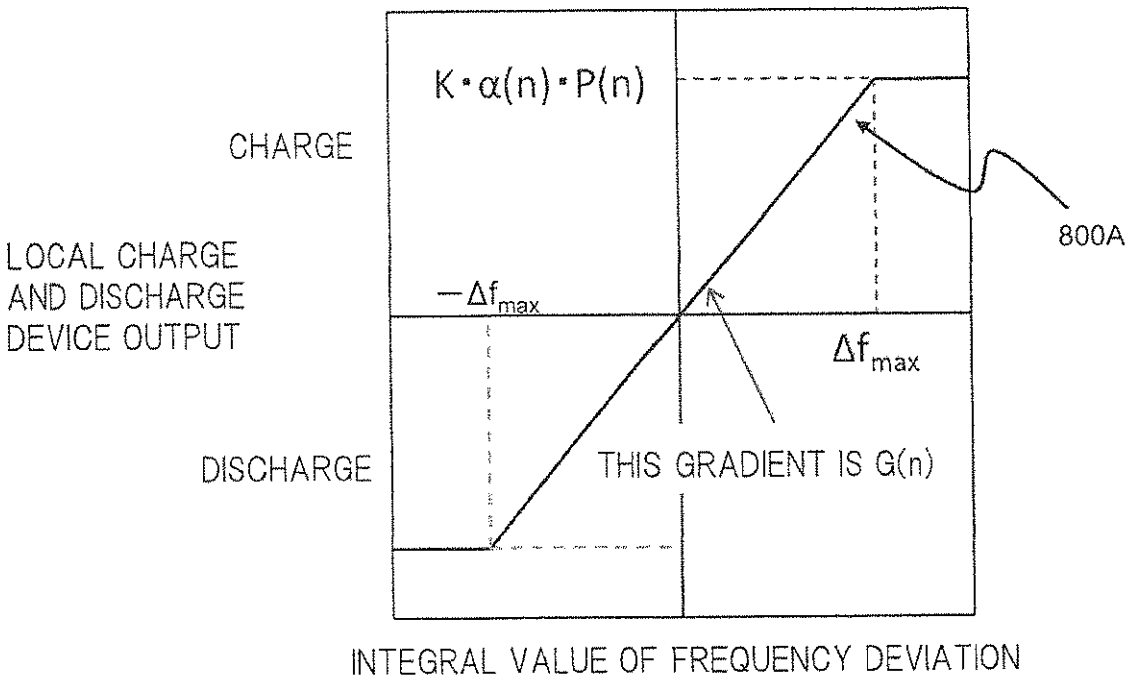
K・α(n)・P(n)
CHARGE
LOCAL CHARGE AND DISCHARGE DEVICE OUTPUT
−Δf max
Δf max
800A
DISCHARGE
THIS GRADIENT IS G(n)
INTEGRAL VALUE OF FREQUENCY DEVIATION

Fig.9

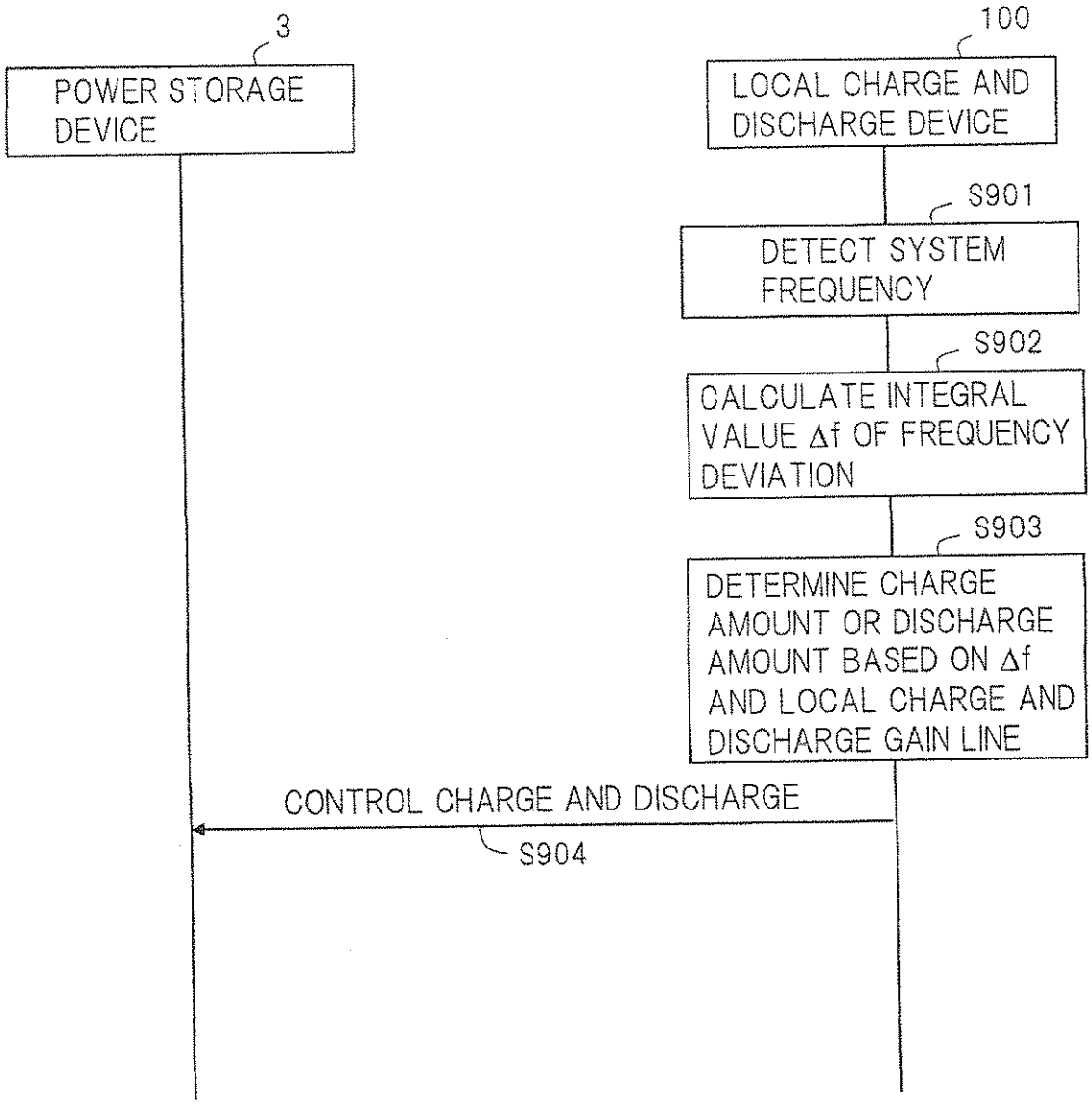
3
POWER STORAGE DEVICE
100
LOCAL CHARGE AND DISCHARGE DEVICE
S901
DETECT SYSTEM FREQUENCY
S902
CALCULATE INTEGRAL VALUE Δf OF FREQUENCY DEVIATION
S903
DETERMINE CHARGE AMOUNT OR DISCHARGE AMOUNT BASED ON Δf AND LOCAL CHARGE AND DISCHARGE GAIN LINE
CONTROL CHARGE AND DISCHARGE
S904

Fig.10

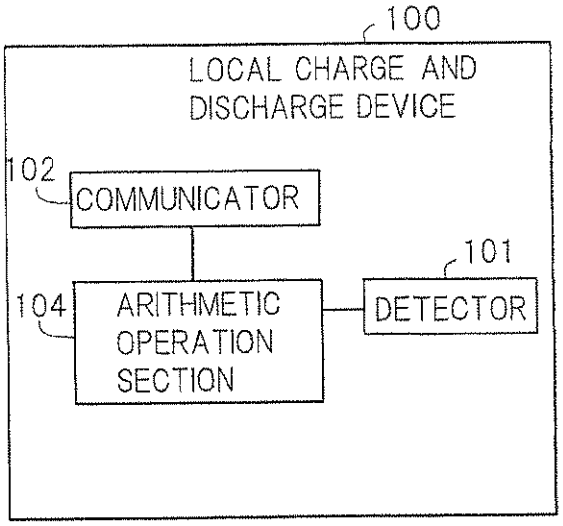
100
LOCAL CHARGE AND DISCHARGE DEVICE
102
COMMUNICATOR
101
104
ARITHMETIC OPERATION SECTION
DETECTOR

Fig.11

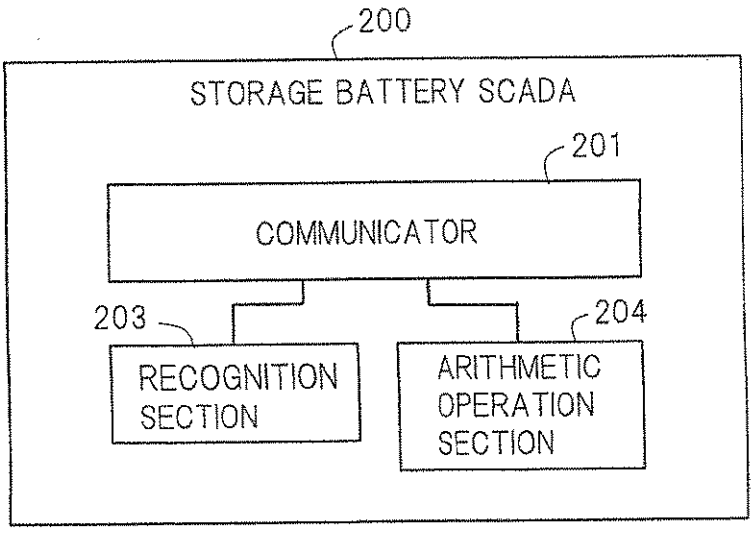
200
STORAGE BATTERY SCADA
201
COMMUNICATOR
203
204
RECOGNITION SECTION
ARITHMETIC OPERATION SECTION

Fig.12

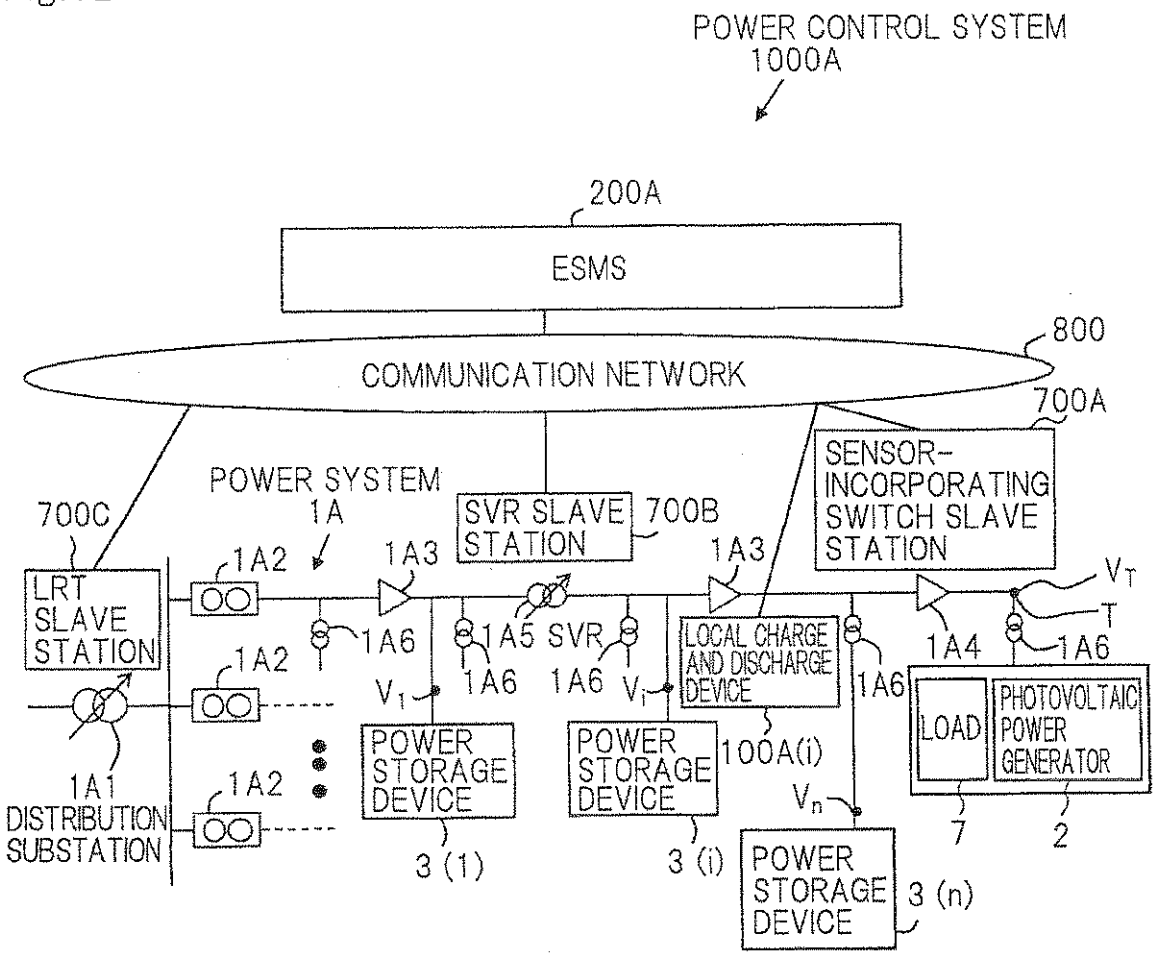
POWER CONTROL SYSTEM
1000A
200A
ESMS
800
COMMUNICATION NETWORK
700A
SENSOR-INCORPORATING SWITCH SLAVE STATION
POWER SYSTEM
1A
700C
SVR SLAVE STATION
700B
1A2
1A3
1A3
LRT SLAVE STATION
1A6
1A5
SVR
1A6
1A6
LOCAL CHARGE AND DISCHARGE DEVICE
1A6
1A4
1A6
V_T
T
1A2
V_1
V_i
LOAD
PHOTOVOLTAIC POWER GENERATOR
POWER STORAGE DEVICE
POWER STORAGE DEVICE
100A(i)
1A1
DISTRIBUTION SUBSTATION
1A2
V_n
7
2
3 (1)
3 (i)
POWER STORAGE DEVICE
3 (n)

Fig.13

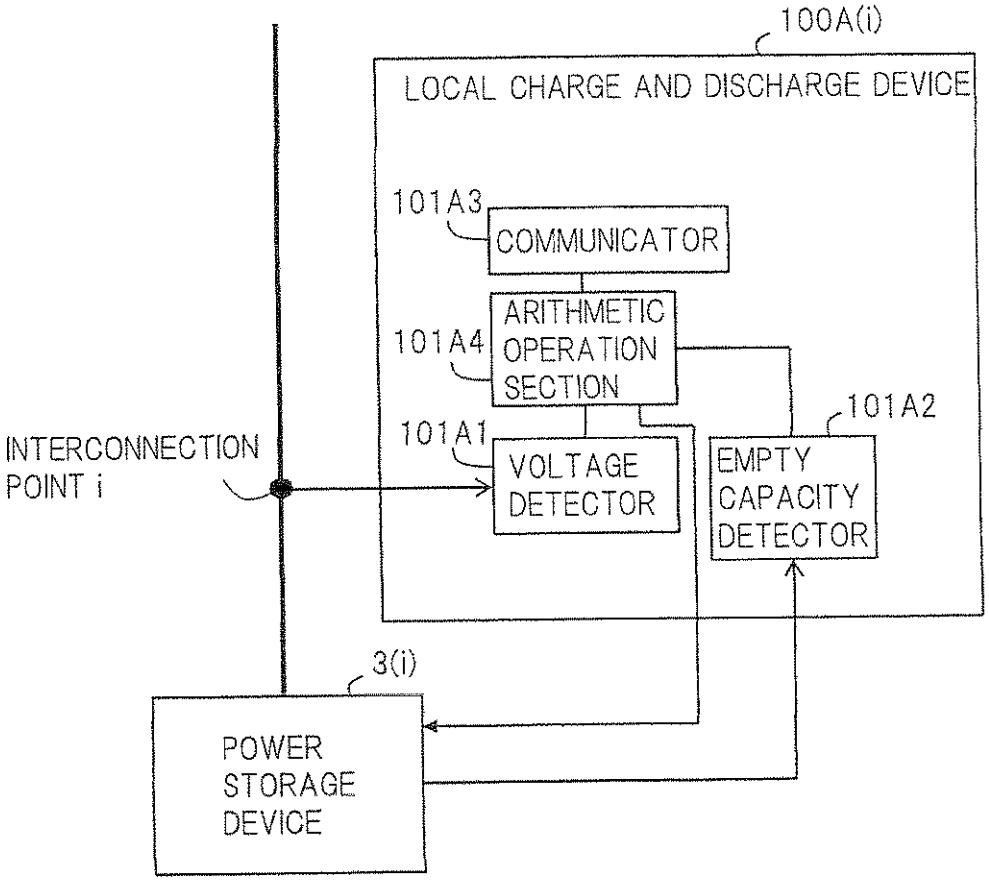
100A(i)
LOCAL CHARGE AND DISCHARGE DEVICE
101A3
COMMUNICATOR
ARITHMETIC OPERATION SECTION
101A4
101A2
101A1
VOLTAGE DETECTOR
EMPTY CAPACITY DETECTOR
INTERCONNECTION POINT i
3(i)
POWER STORAGE DEVICE

Fig.14

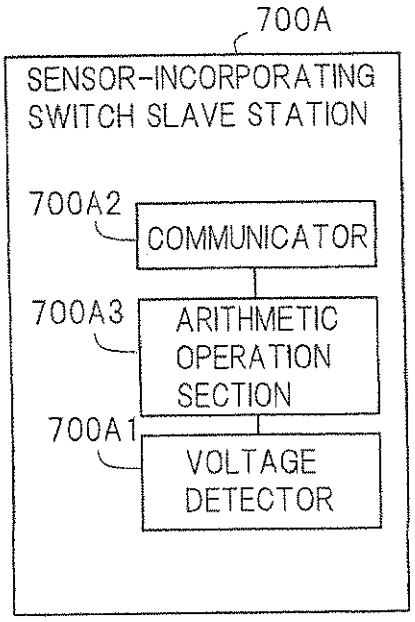
700A
SENSOR-INCORPORATING SWITCH SLAVE STATION
700A2
COMMUNICATOR
700A3
ARITHMETIC OPERATION SECTION
700A1
VOLTAGE DETECTOR

Fig.15

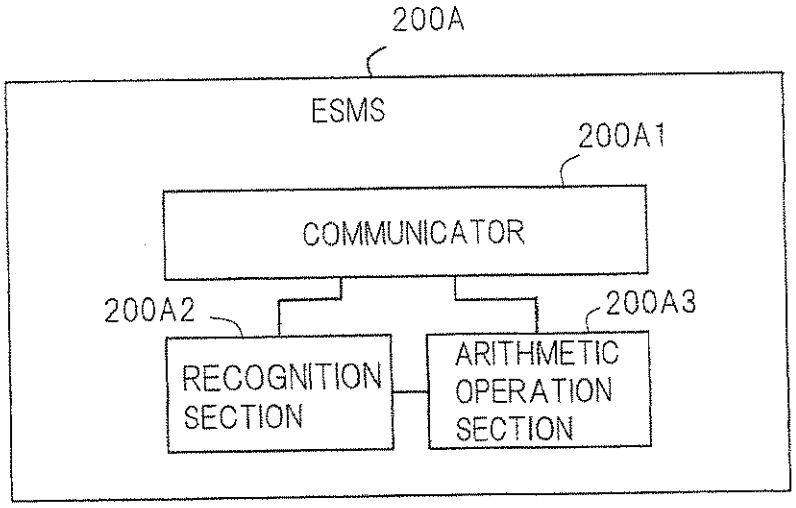
200A
ESMS
200A1
COMMUNICATOR
200A2
200A3
RECOGNITION SECTION
ARITHMETIC OPERATION SECTION

Fig.16

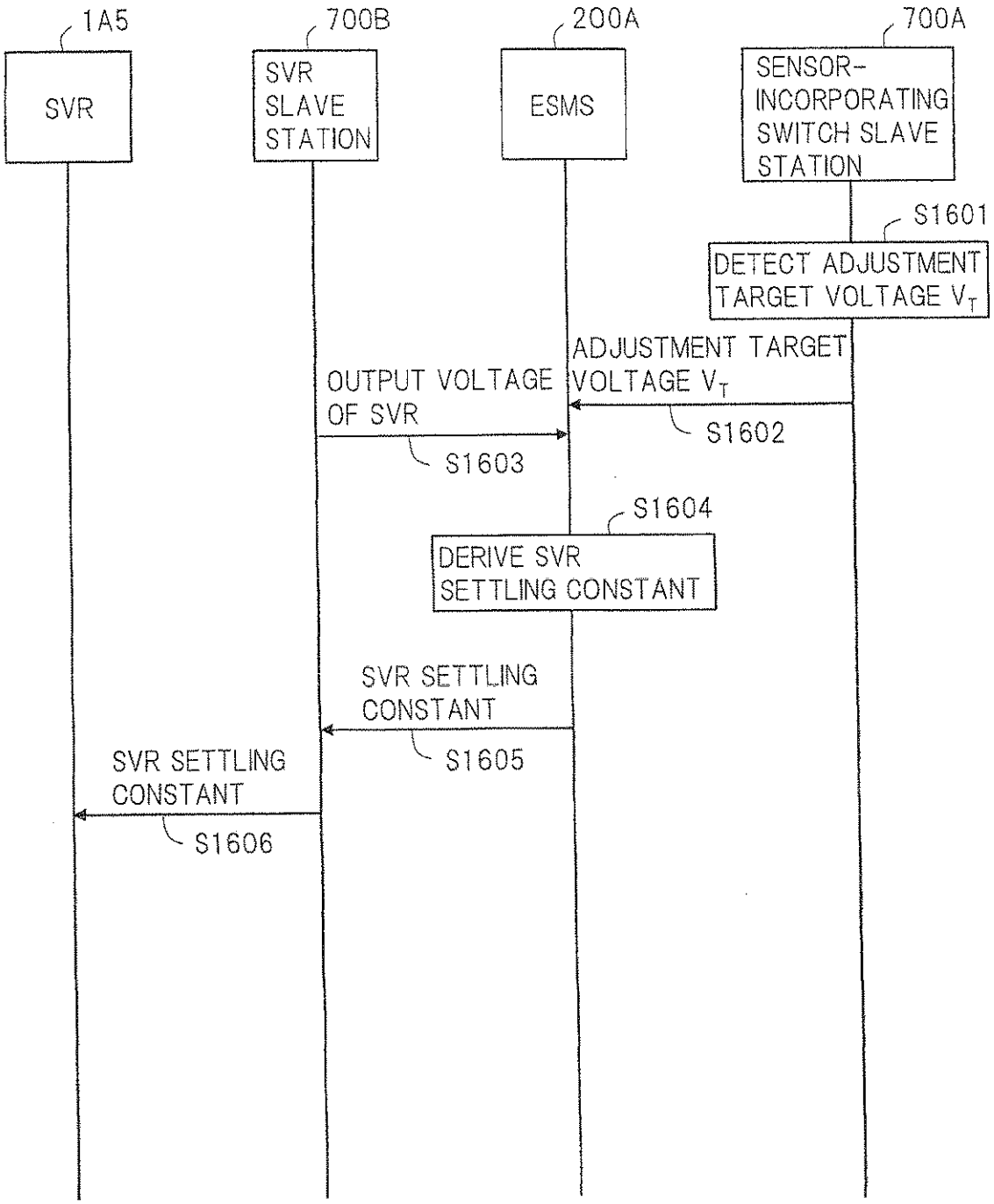
1A5
SVR
700B
SVR SLAVE STATION
200A
ESMS
700A
SENSOR-INCORPORATING SWITCH SLAVE STATION
S1601
DETECT ADJUSTMENT TARGET VOLTAGE V_T
ADJUSTMENT TARGET VOLTAGE V_T
S1602
OUTPUT VOLTAGE OF SVR
S1603
S1604
DERIVE SVR SETTLING CONSTANT
SVR SETTLING CONSTANT
S1605
SVR SETTLING CONSTANT
S1606

Fig.17

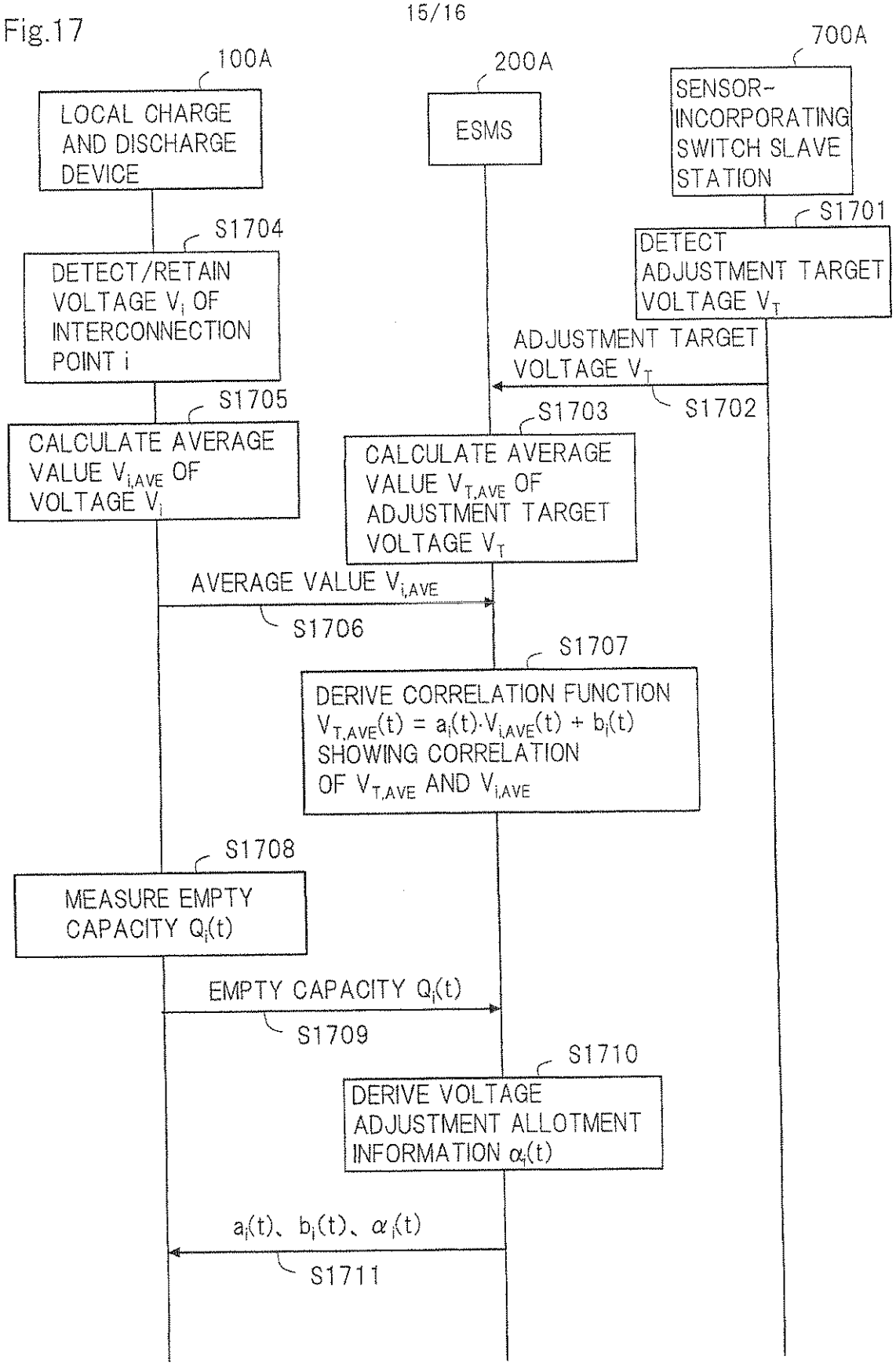
100A
LOCAL CHARGE AND DISCHARGE DEVICE
200A
ESMS
700A
SENSOR-INCORPORATING SWITCH SLAVE STATION
S1701
DETECT ADJUSTMENT TARGET VOLTAGE V_T
S1704
DETECT/RETAIN VOLTAGE V_i OF INTERCONNECTION POINT i
ADJUSTMENT TARGET VOLTAGE V_T
S1702
S1705
CALCULATE AVERAGE VALUE $V_{i,AVE}$ OF VOLTAGE V_i
S1703
CALCULATE AVERAGE VALUE $V_{T,AVE}$ OF ADJUSTMENT TARGET VOLTAGE V_T
AVERAGE VALUE $V_{i,AVE}$
S1706
S1707
DERIVE CORRELATION FUNCTION $V_{T,AVE}(t) = a_i(t) \cdot V_{i,AVE}(t) + b_i(t)$ SHOWING CORRELATION OF $V_{T,AVE}$ AND $V_{i,AVE}$
S1708
MEASURE EMPTY CAPACITY $Q_i(t)$
EMPTY CAPACITY $Q_i(t)$
S1709
S1710
DERIVE VOLTAGE ADJUSTMENT ALLOTMENT INFORMATION $\alpha_i(t)$
$a_i(t)$、$b_i(t)$、$\alpha_i(t)$
S1711

Fig.18

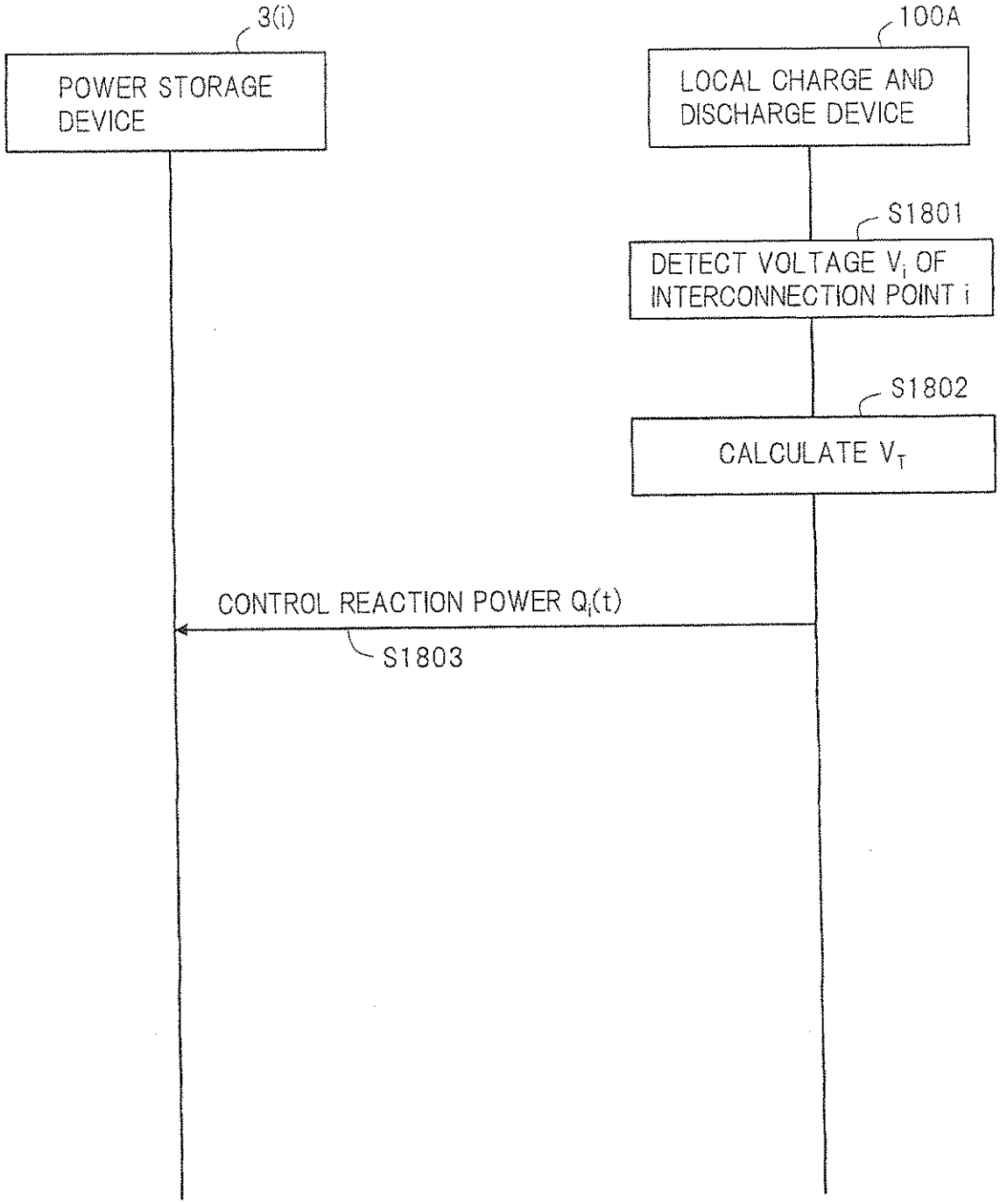
3(i)
POWER STORAGE DEVICE
100A
LOCAL CHARGE AND DISCHARGE DEVICE
S1801
DETECT VOLTAGE V_i OF INTERCONNECTION POINT i
S1802
CALCULATE V_T
CONTROL REACTION POWER $Q_i(t)$
S1803