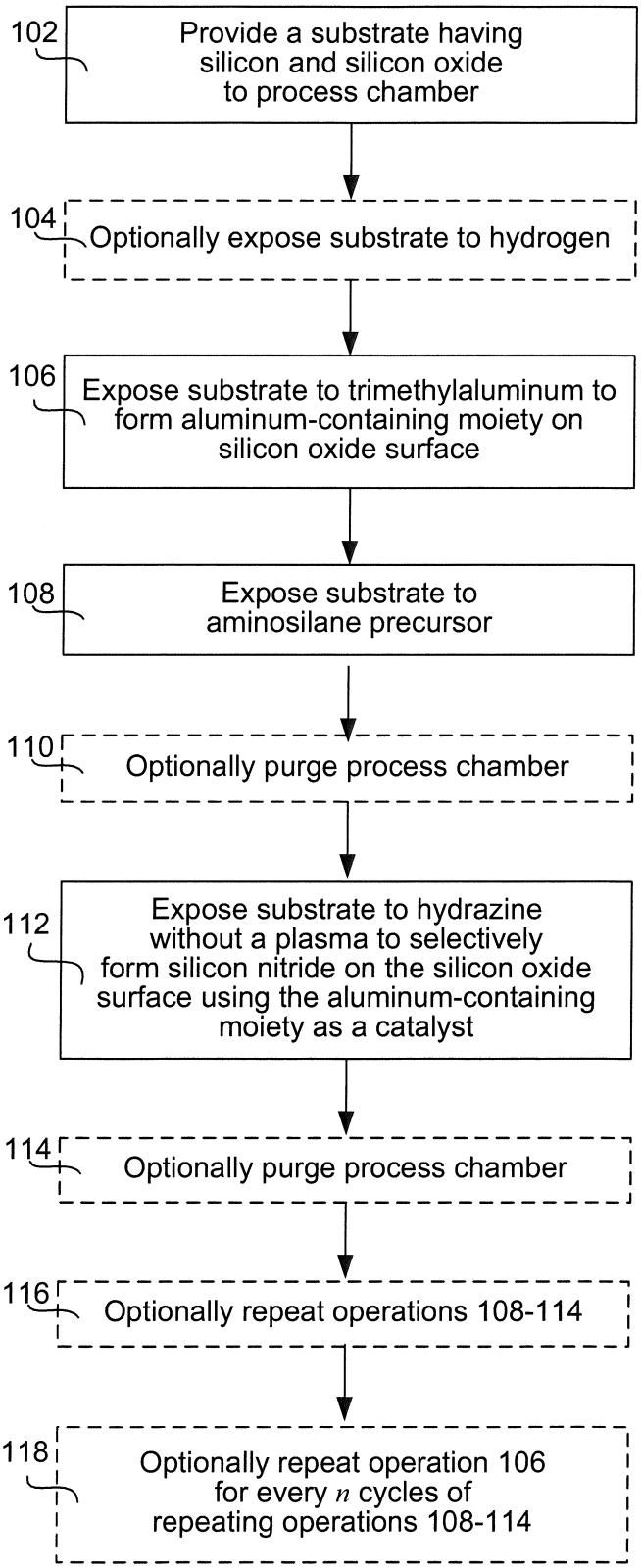
102
Provide a substrate having silicon and silicon oxide to process chamber
104
Optionally expose substrate to hydrogen
106
Expose substrate to trimethylaluminum to form aluminum-containing moiety on silicon oxide surface
108
Expose substrate to aminosilane precursor
110
Optionally purge process chamber
112
Expose substrate to hydrazine without a plasma to selectively form silicon nitride on the silicon oxide surface using the aluminum-containing moiety as a catalyst
114
Optionally purge process chamber
116
Optionally repeat operations 108-114
118
Optionally repeat operation 106 for every n cycles of repeating operations 108-114

FIG. 1

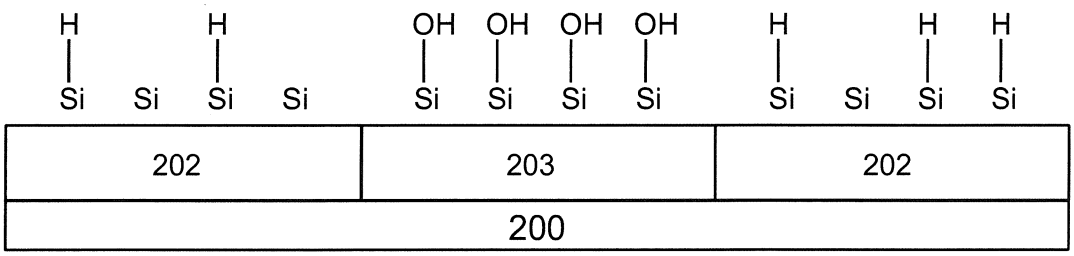
H
H
OH
OH
OH
OH
H
H
H
Si
Si
Si
Si
Si
Si
Si
Si
Si
Si
Si
202
203
202
200

FIG. 2A

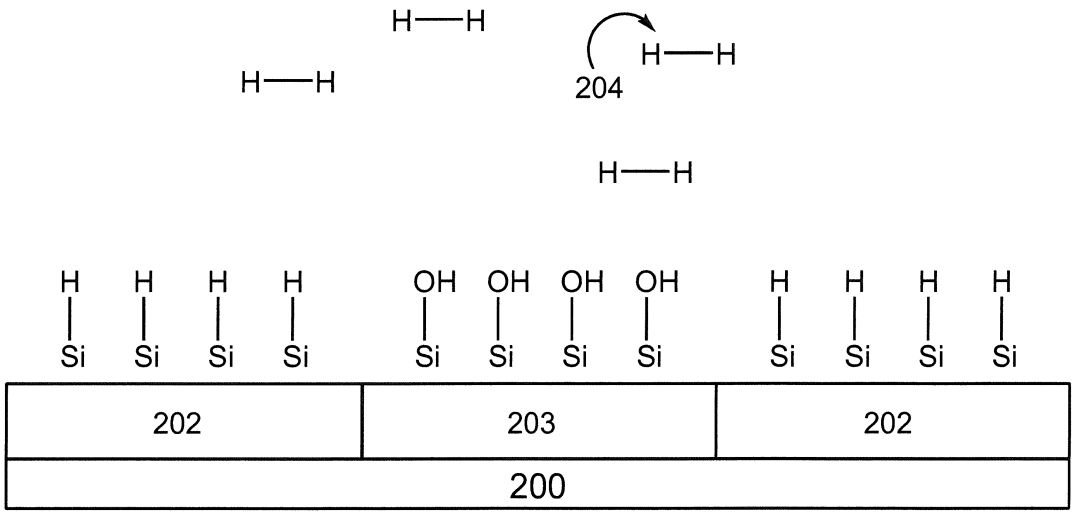
H—H
H—H
H—H
204
H—H
H
H
H
H
OH
OH
OH
OH
H
H
H
H
Si
Si
Si
Si
Si
Si
Si
Si
Si
Si
Si
Si
202
203
202
200

FIG. 2B

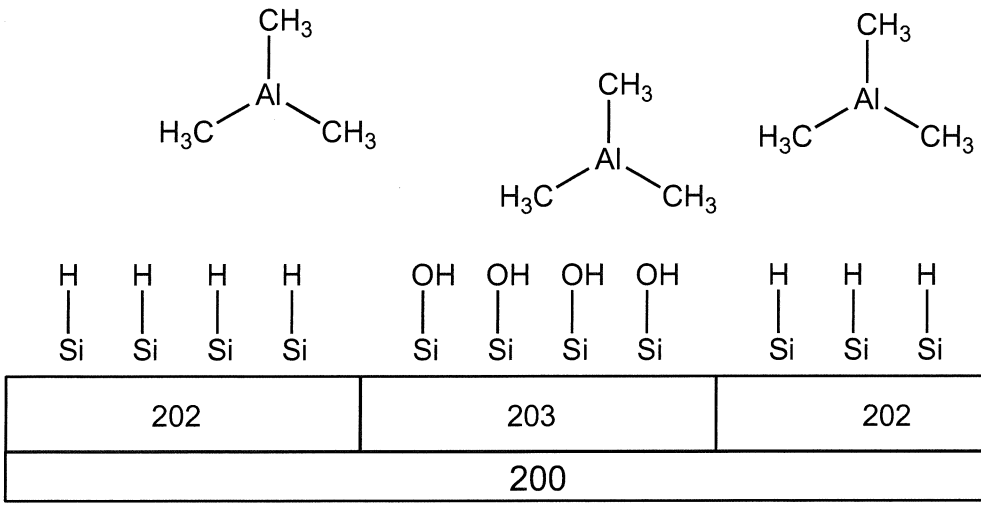

FIG. 2C

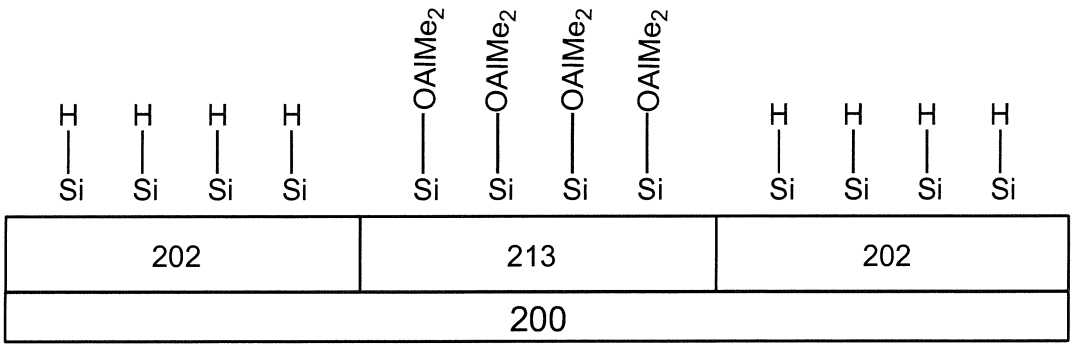

FIG. 2D

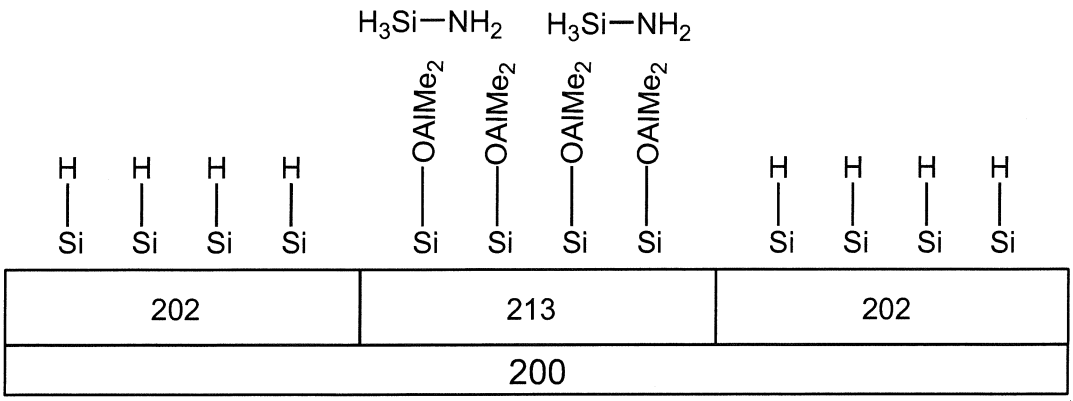

FIG. 2E

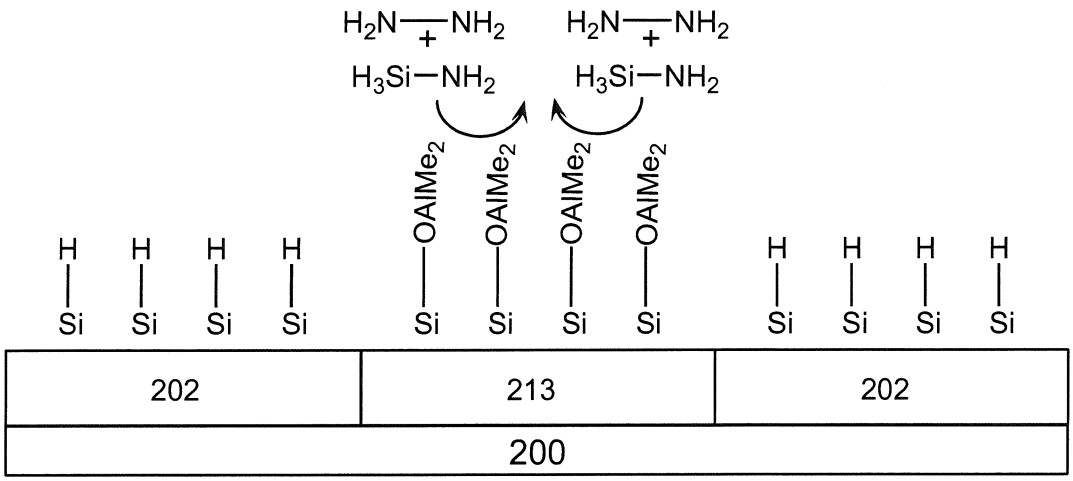

FIG. 2F

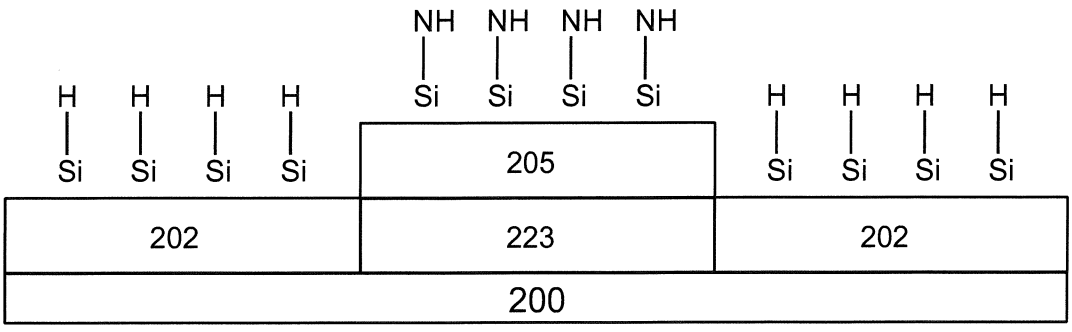

FIG. 2G

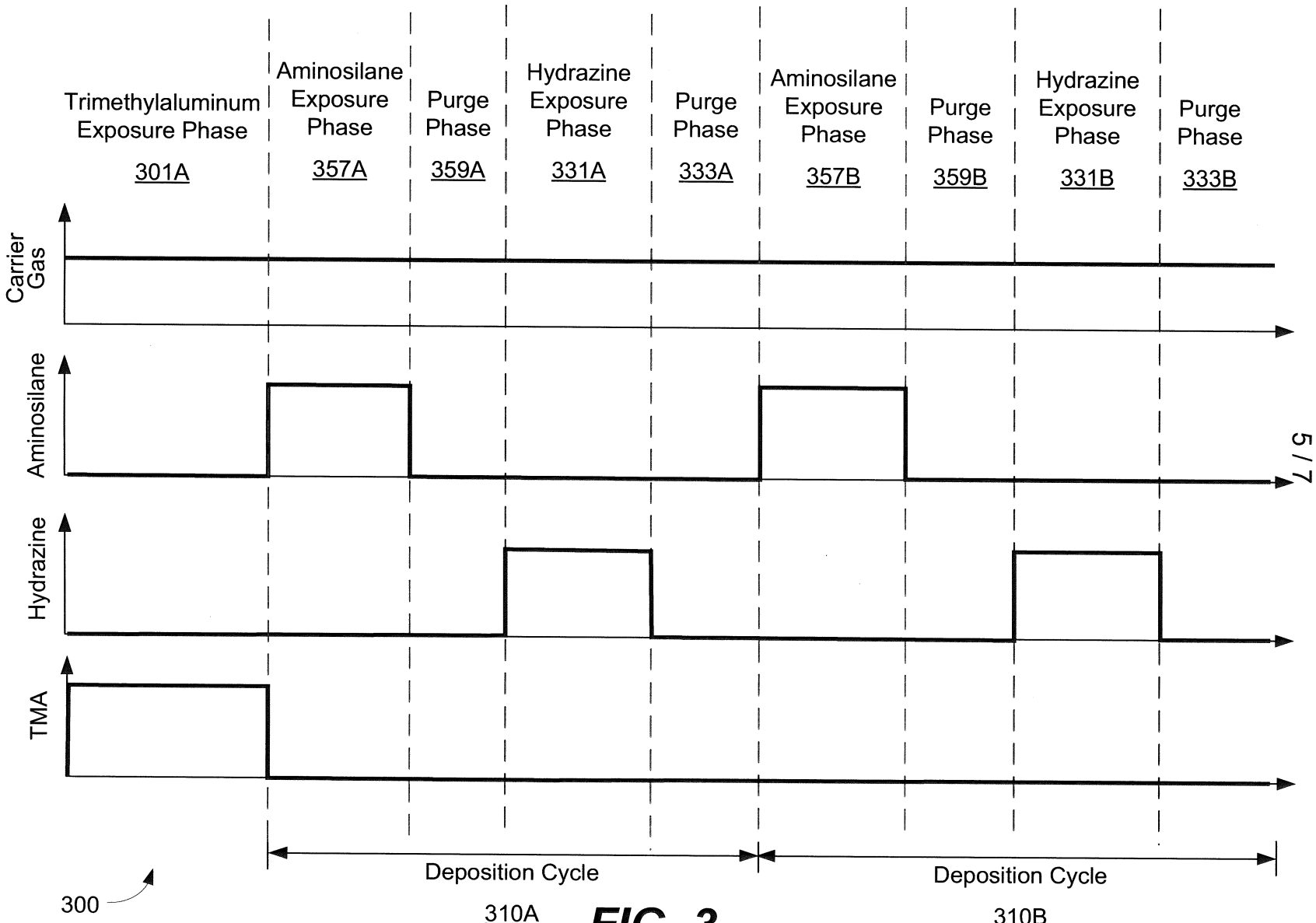
Trimethylaluminum Exposure Phase
301A
Aminosilane Exposure Phase
357A
Purge Phase
359A
Hydrazine Exposure Phase
331A
Purge Phase
333A
Aminosilane Exposure Phase
357B
Purge Phase
359B
Hydrazine Exposure Phase
331B
Purge Phase
333B
Carrier Gas
Aminosilane
Hydrazine
TMA
Deposition Cycle
310A
Deposition Cycle
310B
300

FIG. 3

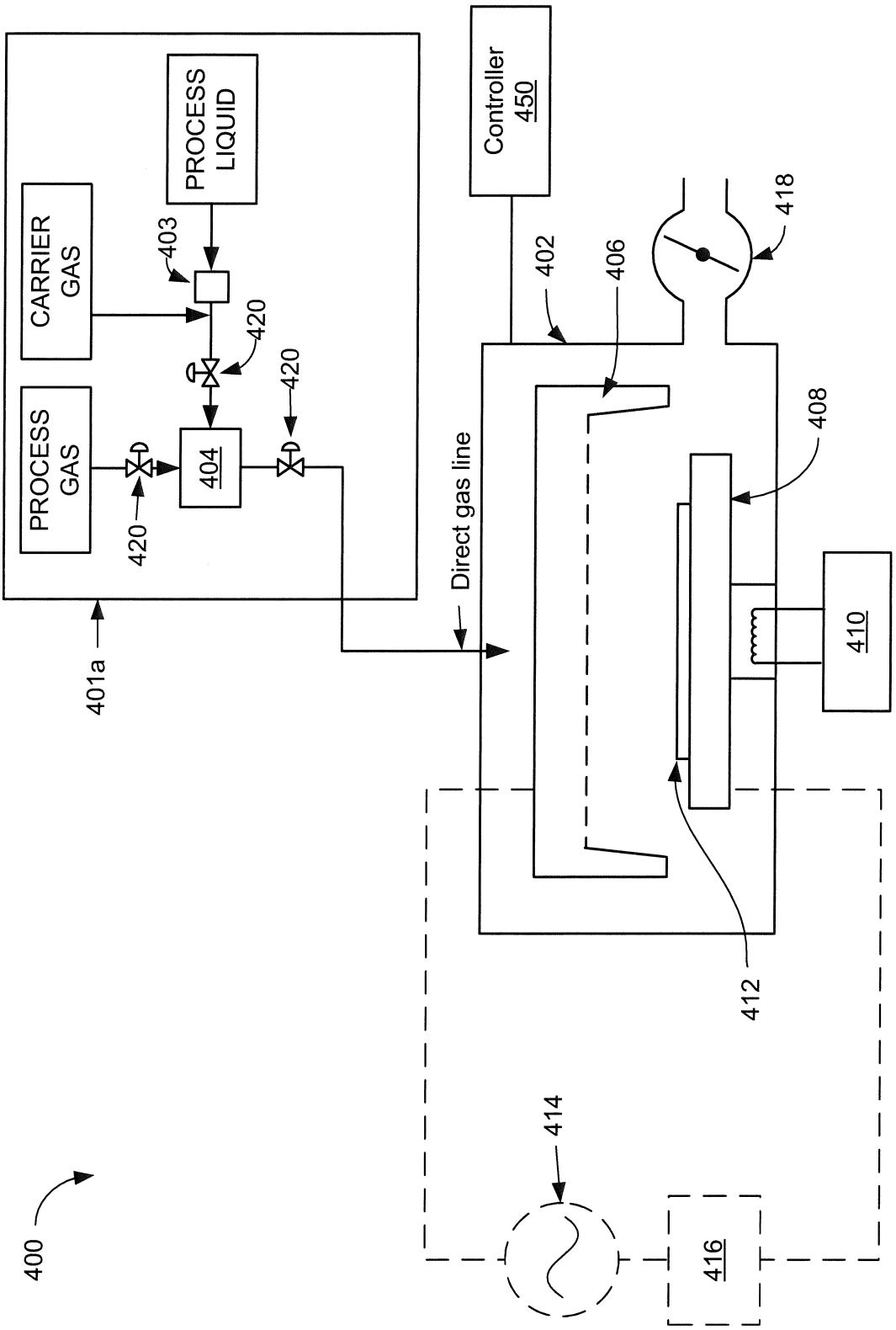
400
401a
PROCESS GAS
CARRIER GAS
PROCESS LIQUID
403
420
420
420
404
Direct gas line
Controller 450
402
406
418
408
410
412
414
416

FIG. 4

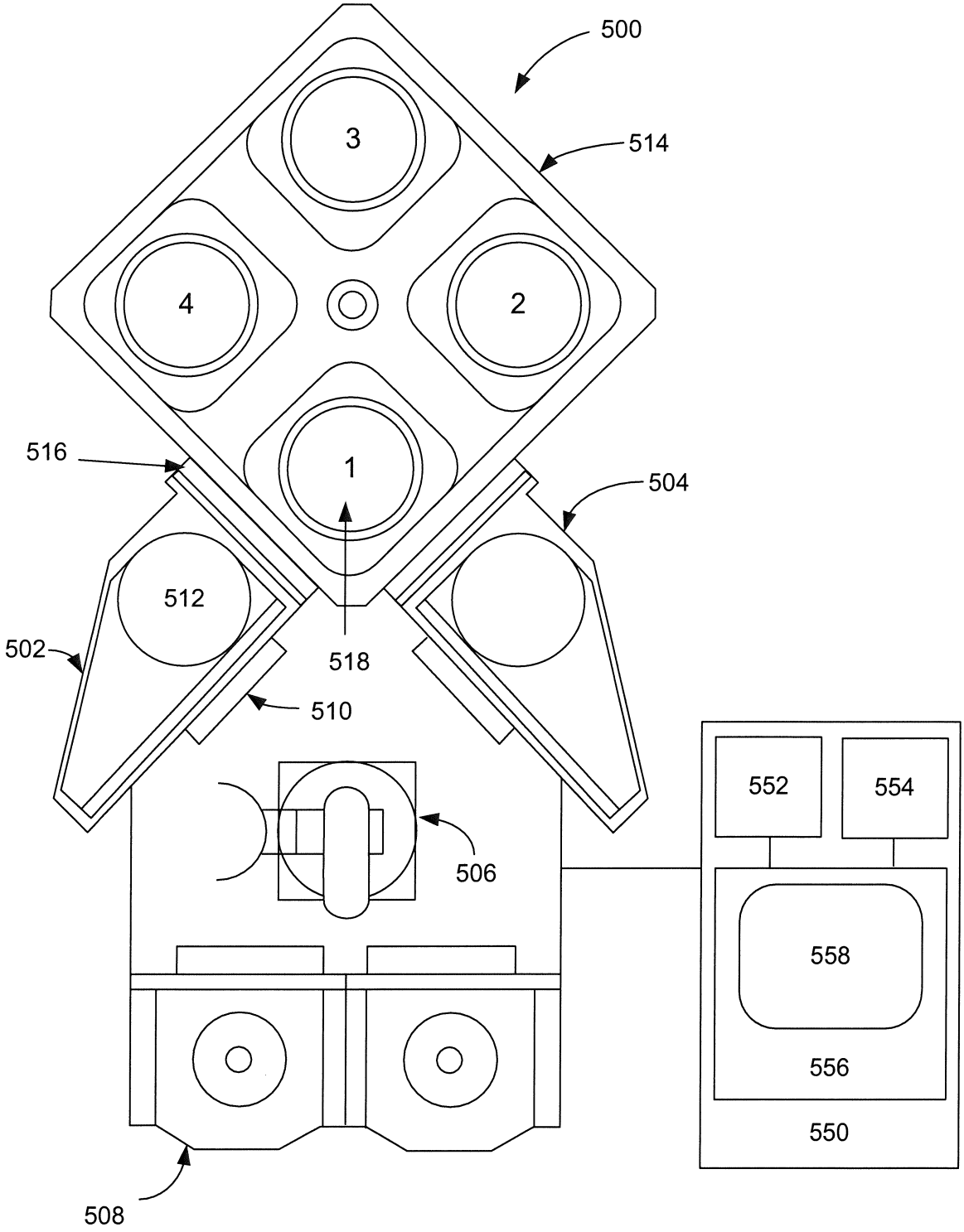

FIG. 5