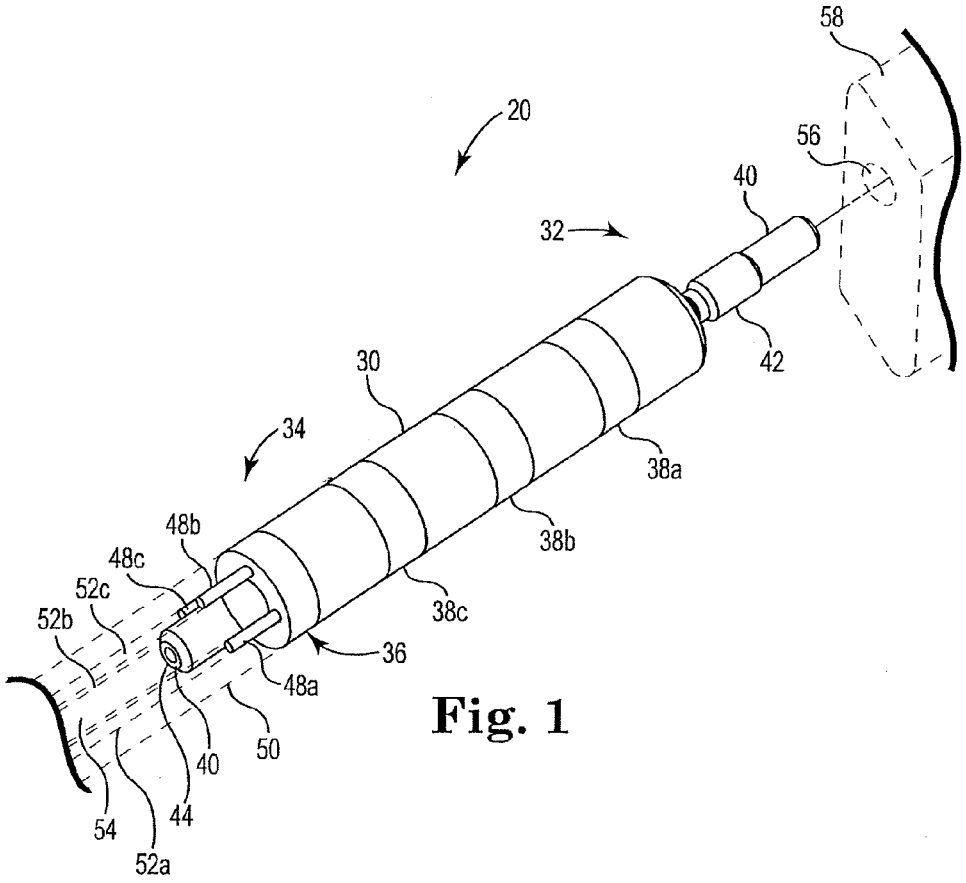
58
20
56
40
32
42
30
34
38a
38b
48b
48c
52c
52b
38c
36
48a
40
50
54
44
52a

Fig. 1

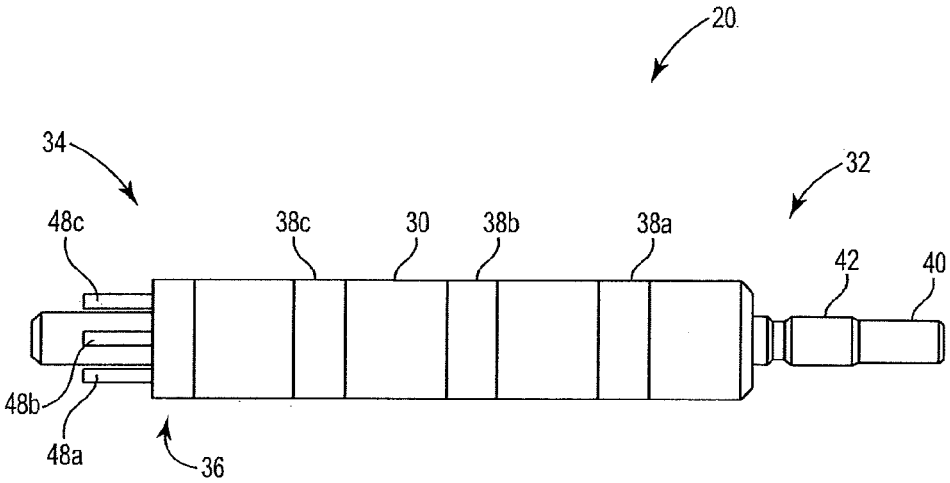
20
34
32
48c
38c
30
38b
38a
42
40
48b
48a
36

Fig. 2

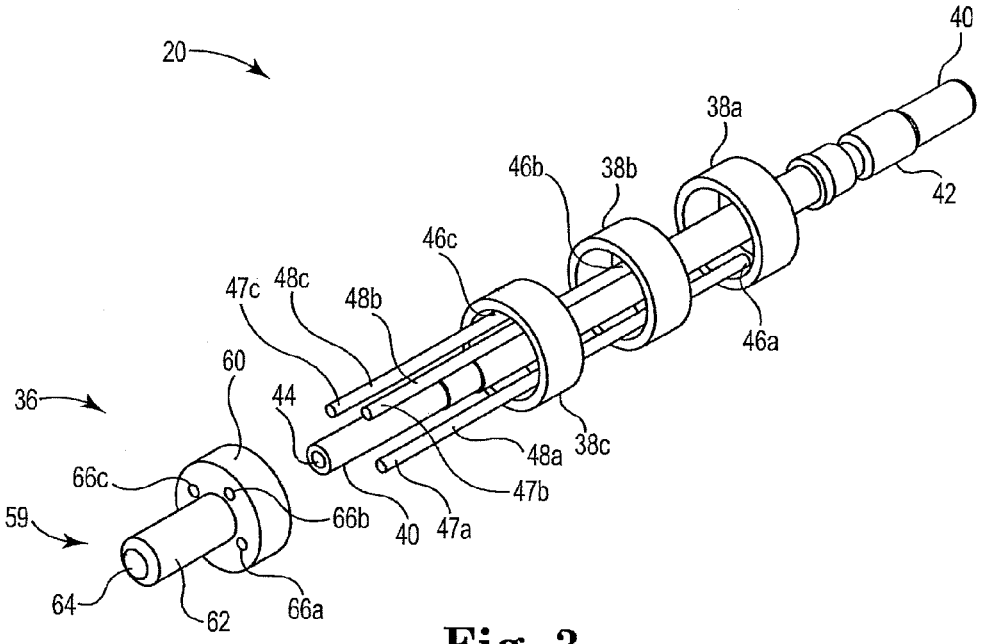
20
40
38a
46b
38b
42
46c
47c
48c
48b
46a
60
36
44
38c
48a
66c
47b
59
66b
40
47a
64
62
66a

Fig. 3

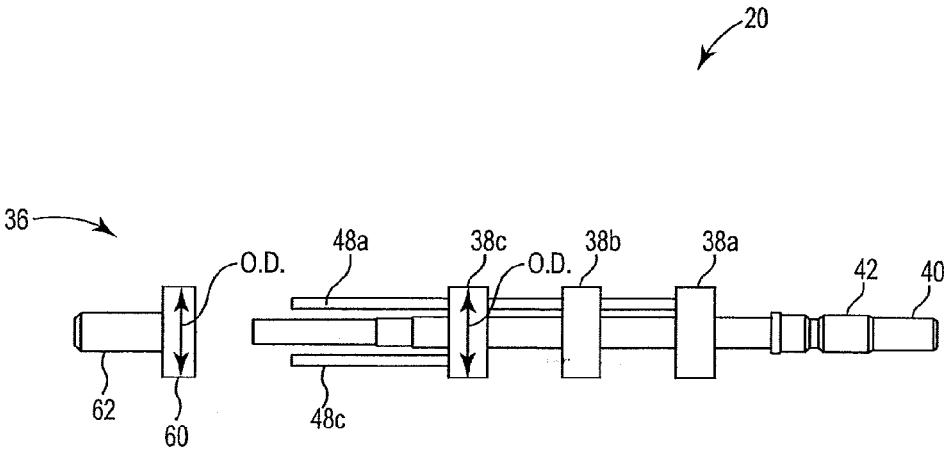
20
36
O.D.
48a
38c
O.D.
38b
38a
42
40
62
60
48c

Fig. 4

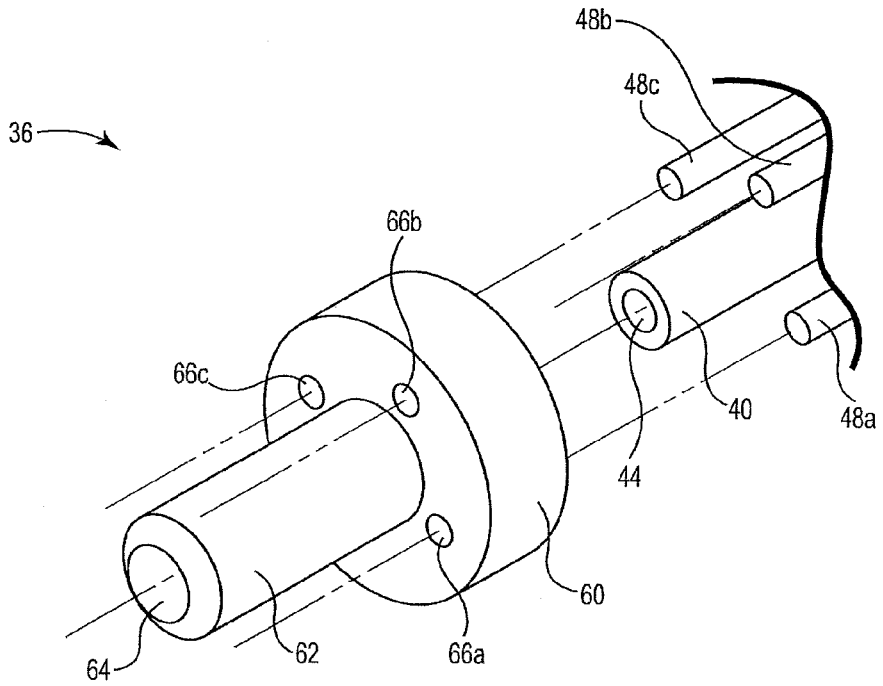
48b
48c
36
66b
66c
40
48a
44
60
64
62
66a

Fig. 5

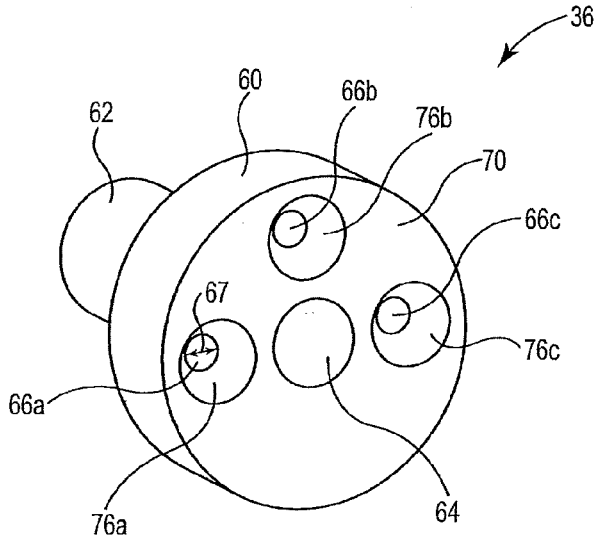

Fig. 6A

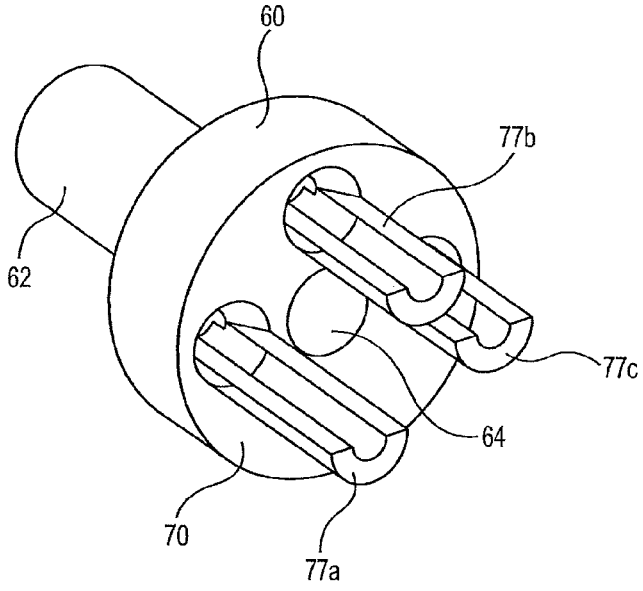

Fig. 6B

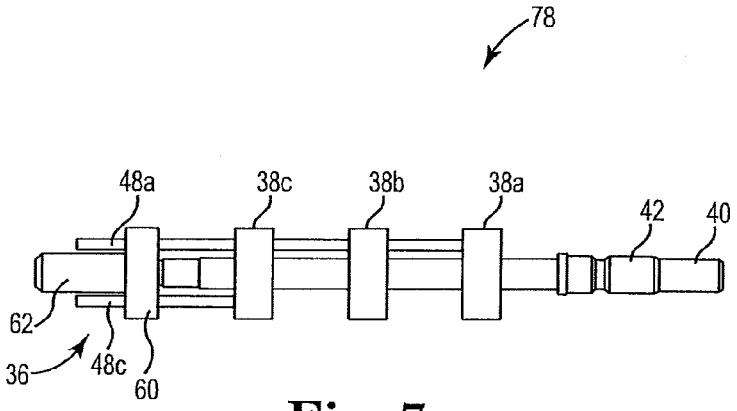

Fig. 7

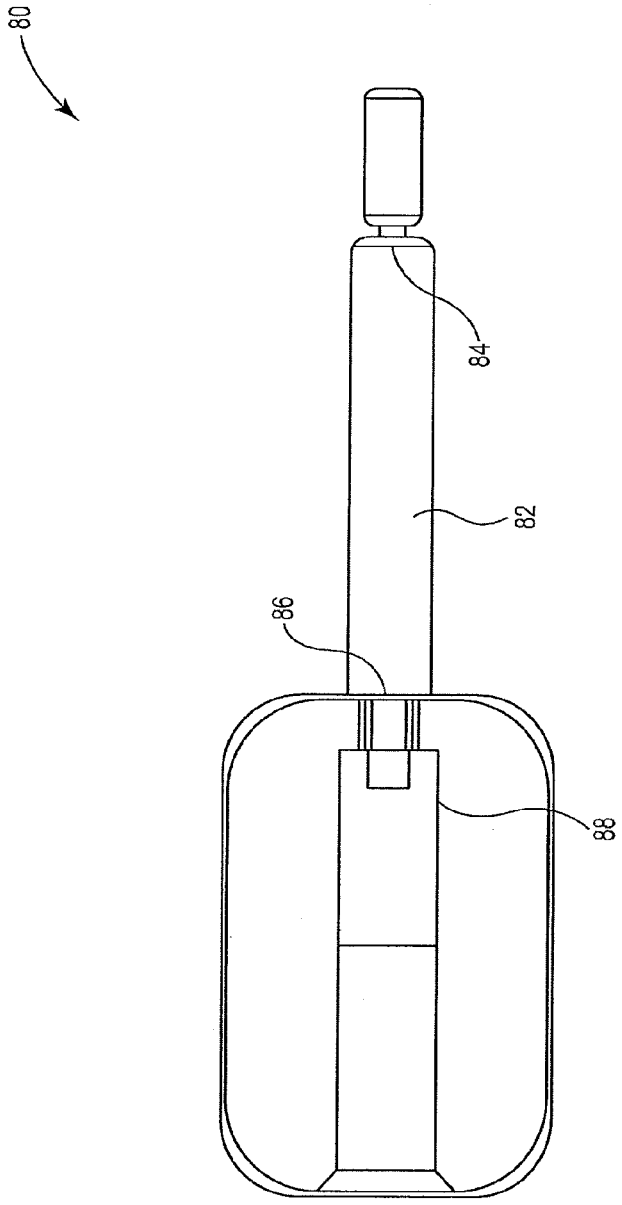

Fig. 8

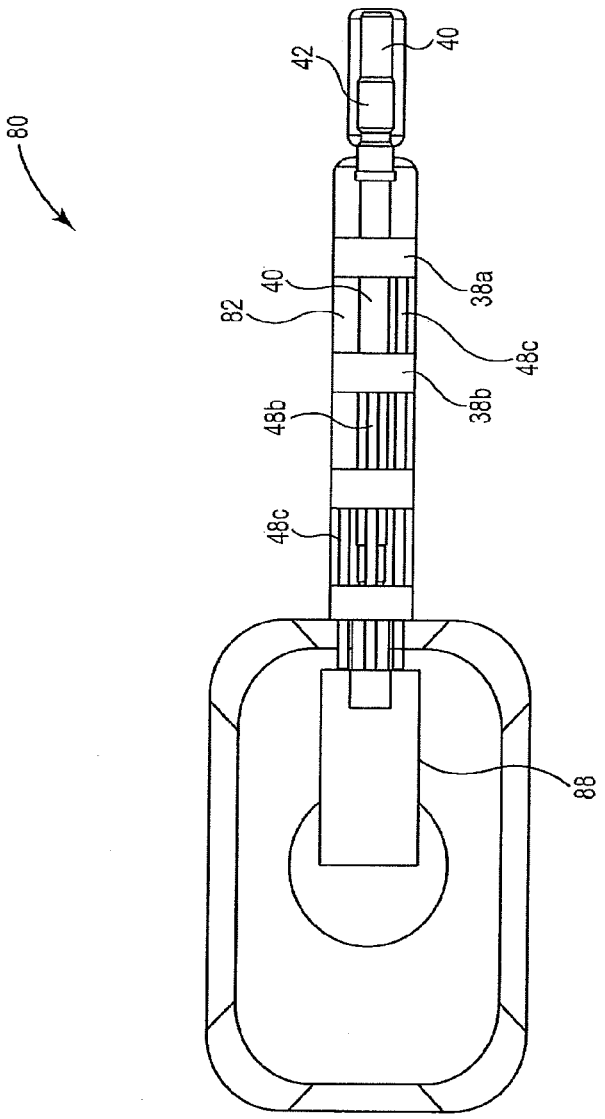

Fig. 9

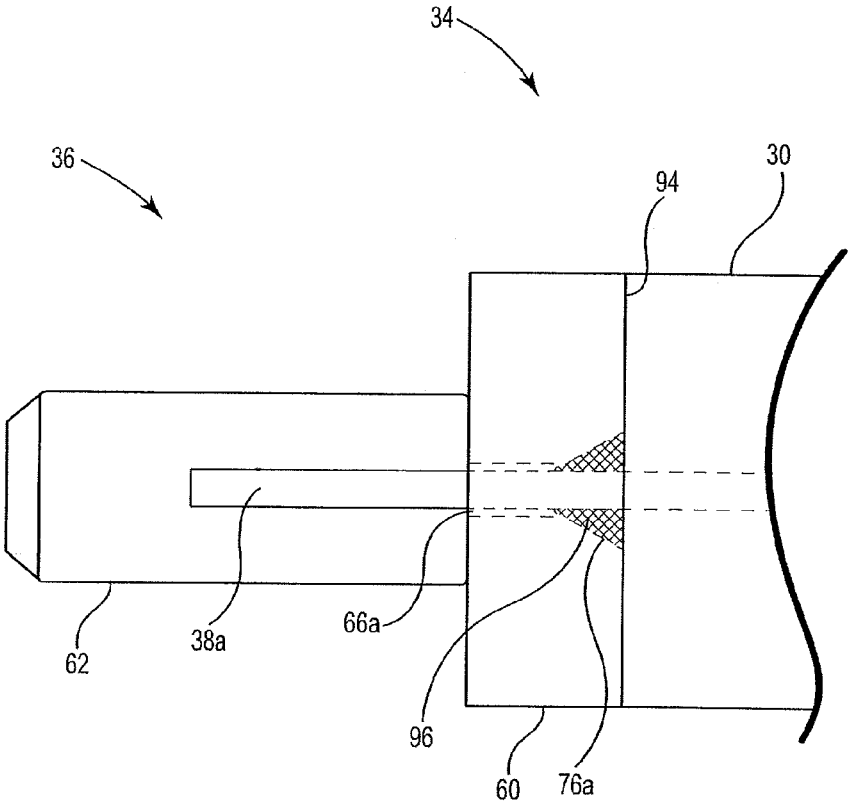

Fig. 10

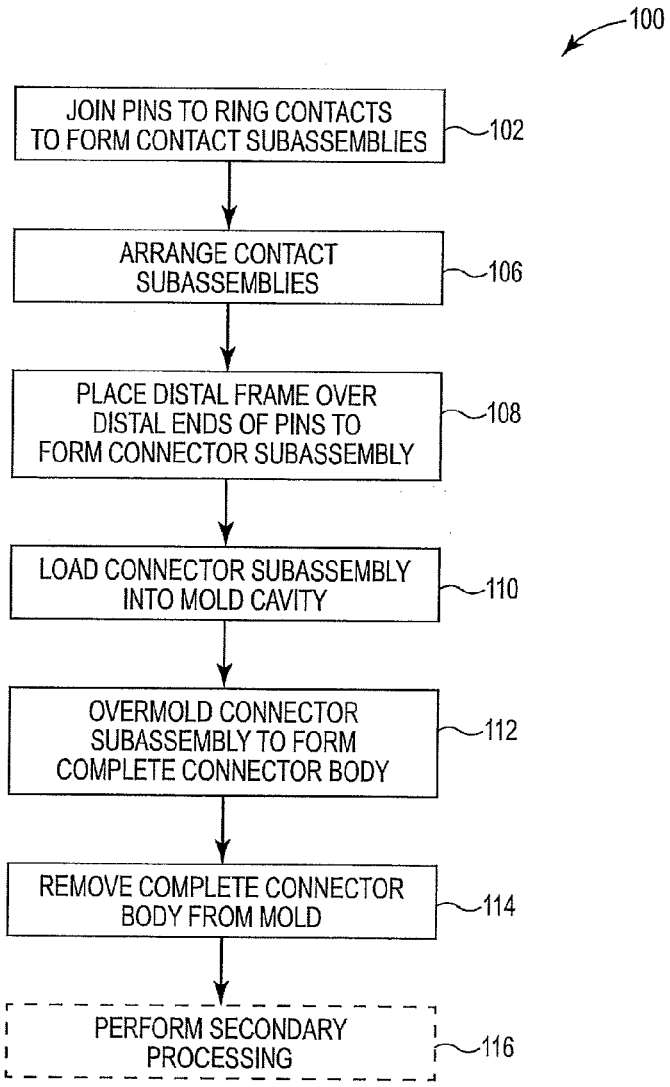
100
JOIN PINS TO RING CONTACTS TO FORM CONTACT SUBASSEMBLIES
102
ARRANGE CONTACT SUBASSEMBLIES
106
PLACE DISTAL FRAME OVER DISTAL ENDS OF PINS TO FORM CONNECTOR SUBASSEMBLY
108
LOAD CONNECTOR SUBASSEMBLY INTO MOLD CAVITY
110
OVERMOLD CONNECTOR SUBASSEMBLY TO FORM COMPLETE CONNECTOR BODY
112
REMOVE COMPLETE CONNECTOR BODY FROM MOLD
114
PERFORM SECONDARY PROCESSING
116

Fig. 11