[Figures]

[Figure 1]

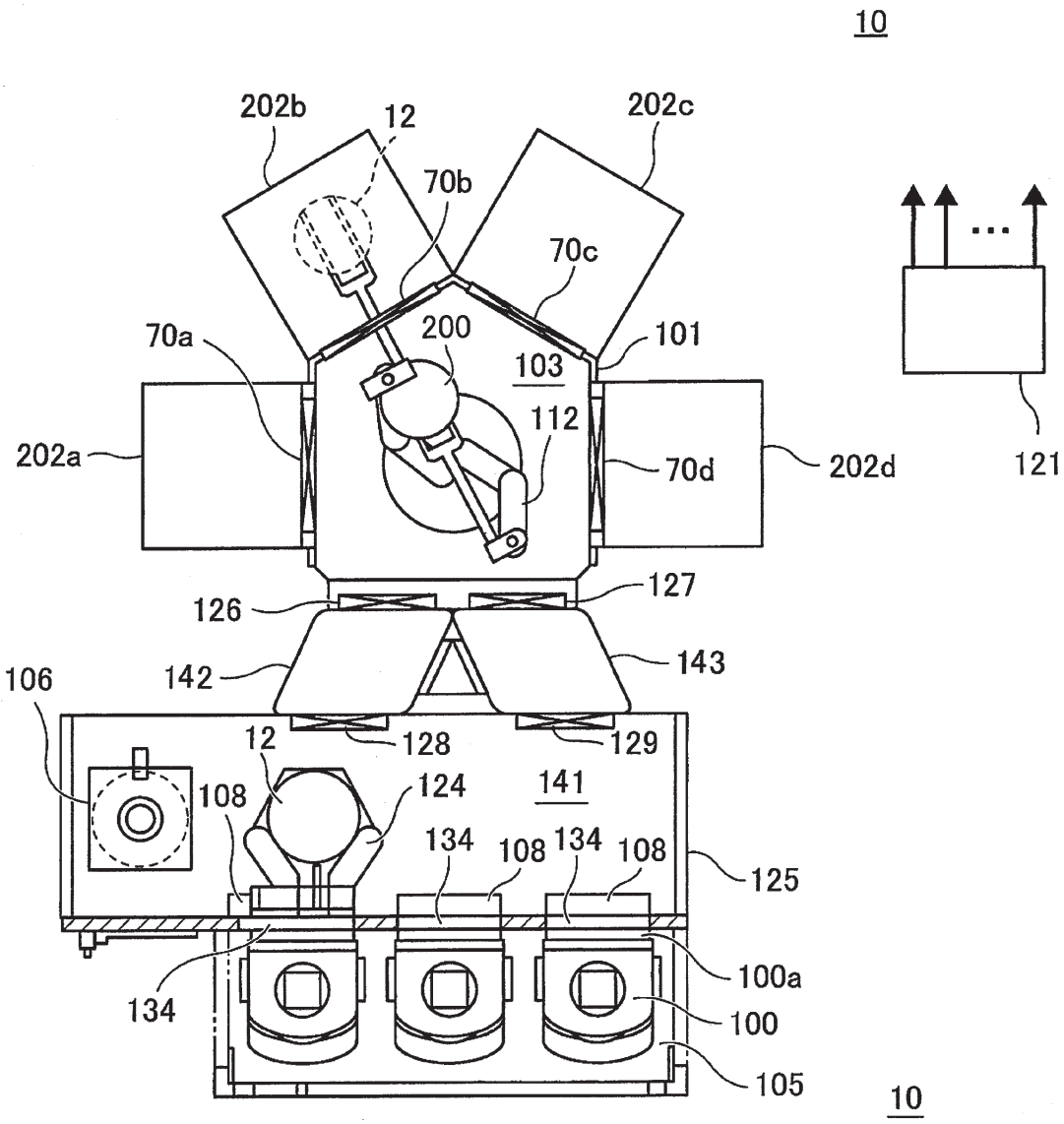

[Figure 2]

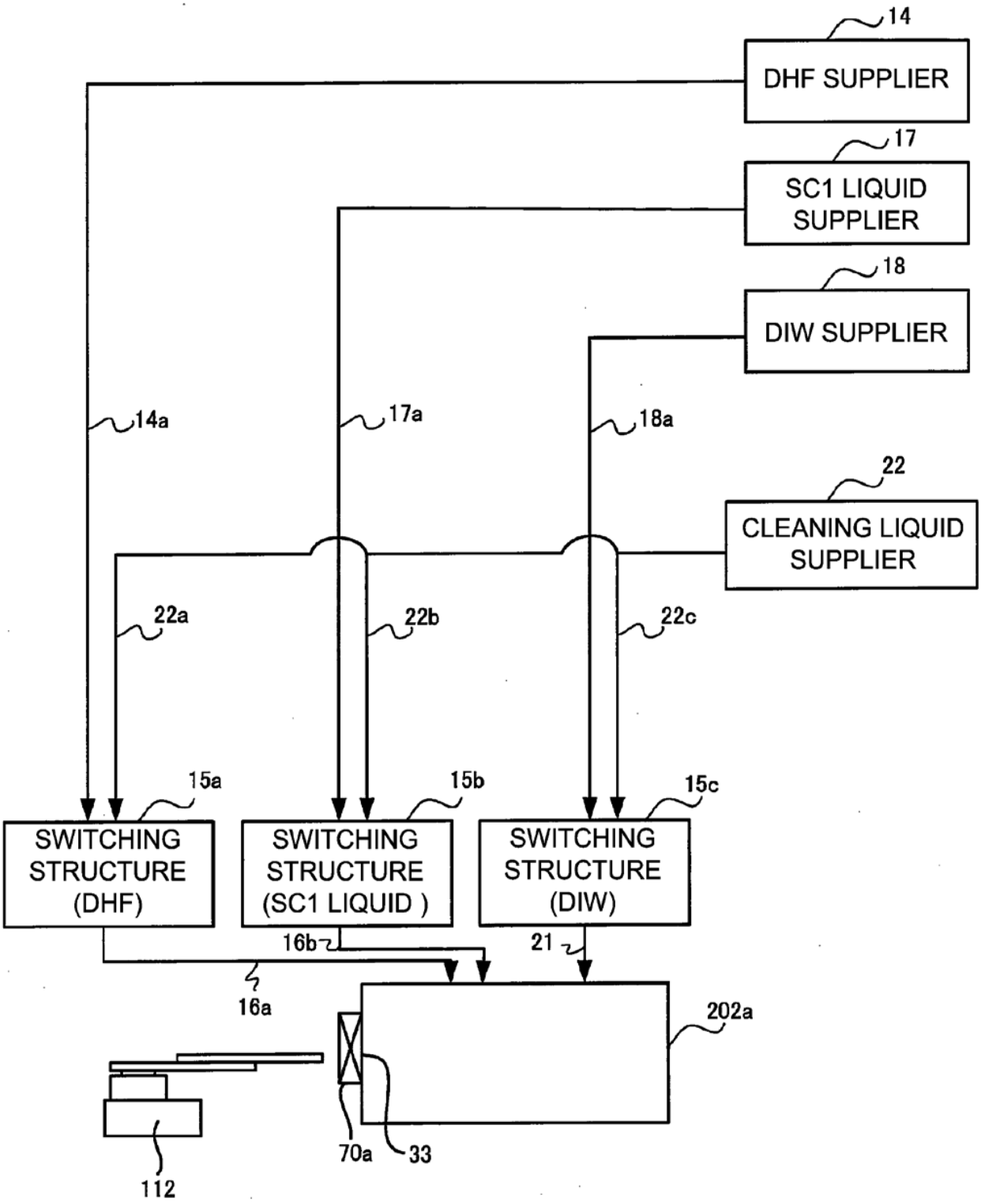
14
DHF SUPPLIER
17
SC1 LIQUID SUPPLIER
18
DIW SUPPLIER
14a
17a
18a
22
CLEANING LIQUID SUPPLIER
22a
22b
22c
15a
15b
15c
SWITCHING STRUCTURE (DHF)
SWITCHING STRUCTURE (SC1 LIQUID)
SWITCHING STRUCTURE (DIW)
16b
21
16a
202a
70a
33
112

[Figure 3]

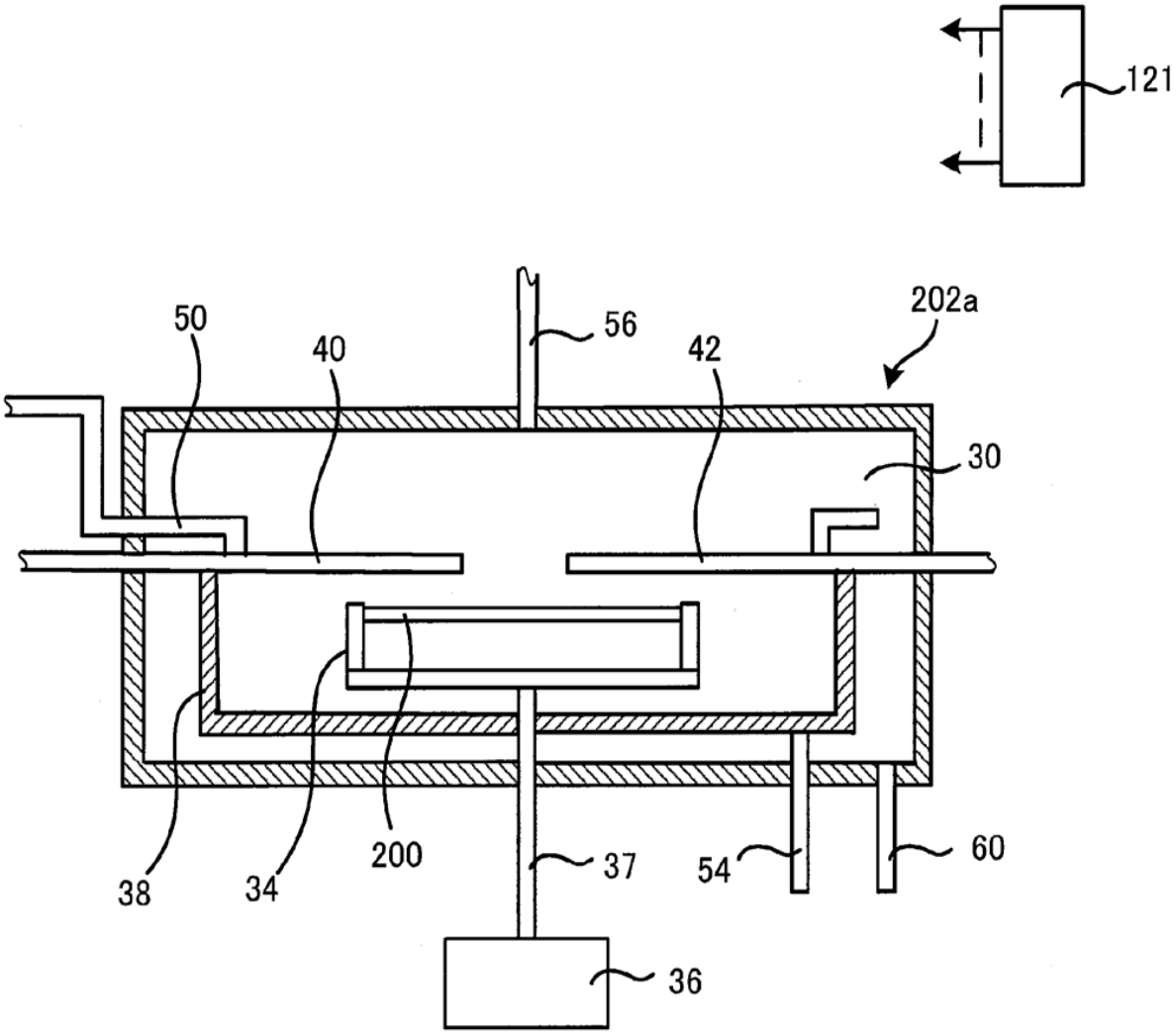

[Figure 4]

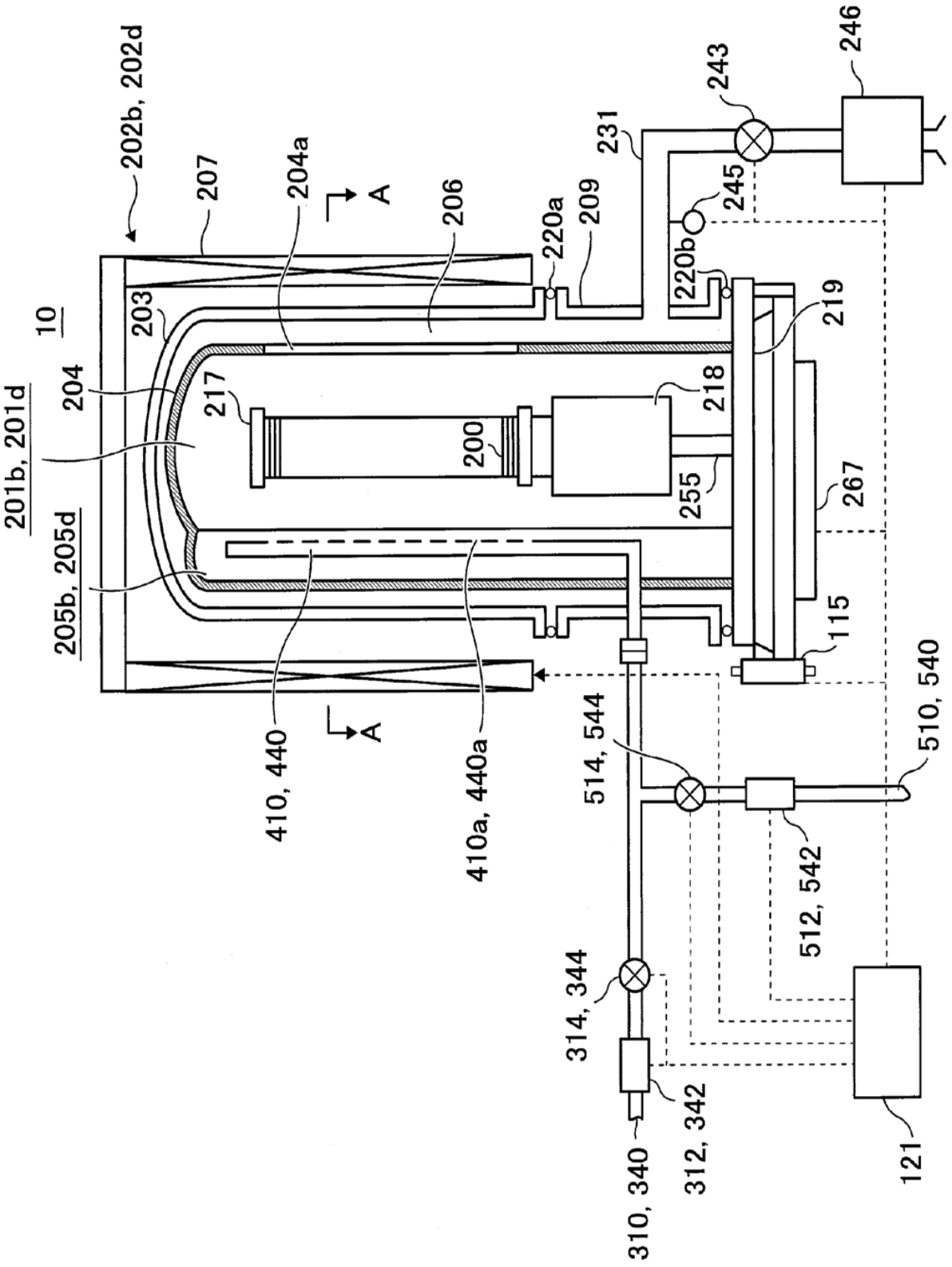
202b, 202d
207
204a
A
206
220a
209
231
243
246
245
220b
219
10
203
204
217
218
201b, 201d
200
255
267
205b, 205d
115
410, 440
410a, 440a
514, 544
510, 540
512, 542
314, 344
312, 342
310, 340
121

[Figure 5]

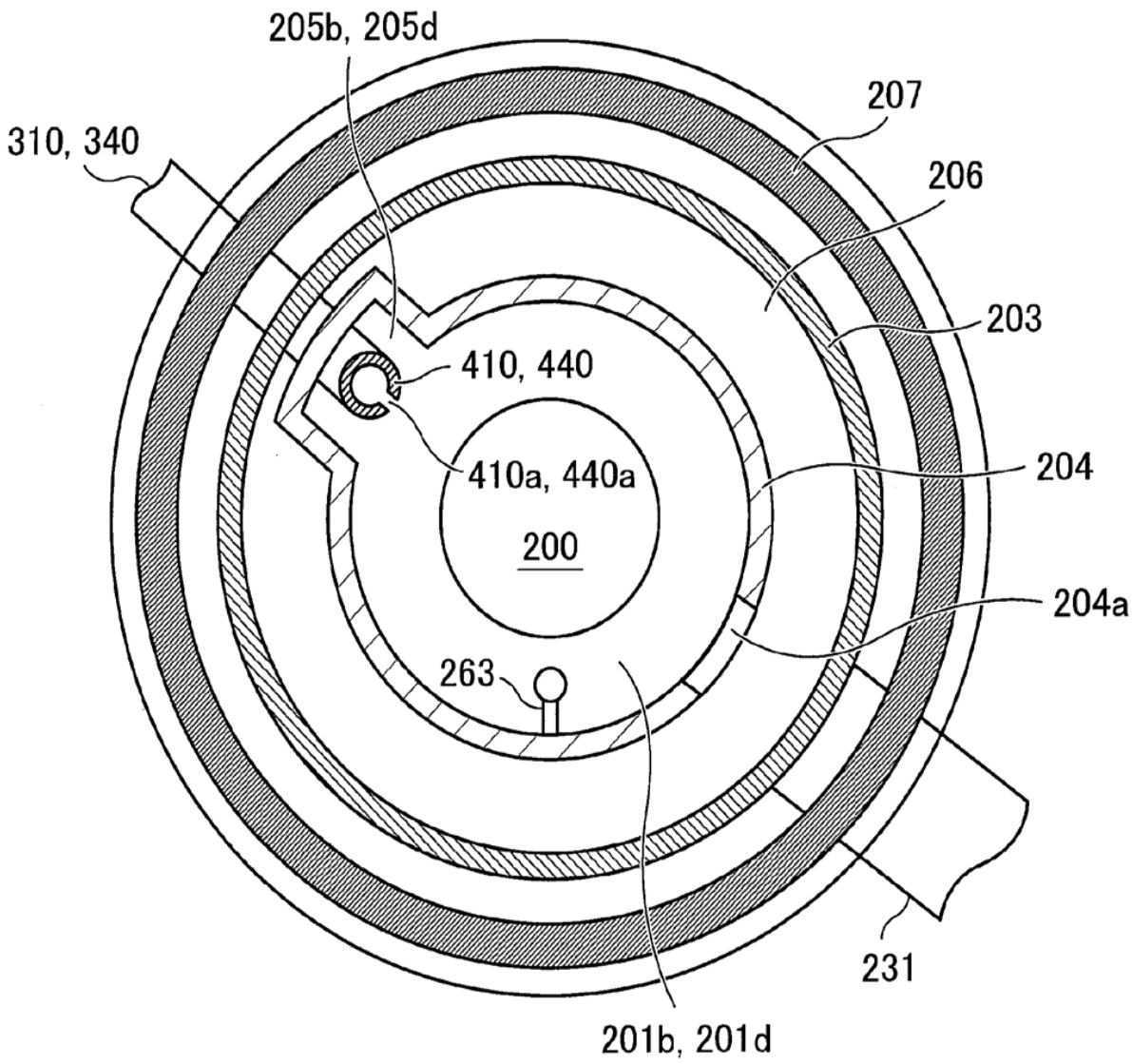
202b, 202d
205b, 205d
207
310, 340
206
203
410, 440
410a, 440a
204
200
204a
263
231
201b, 201d

[Figure 6]

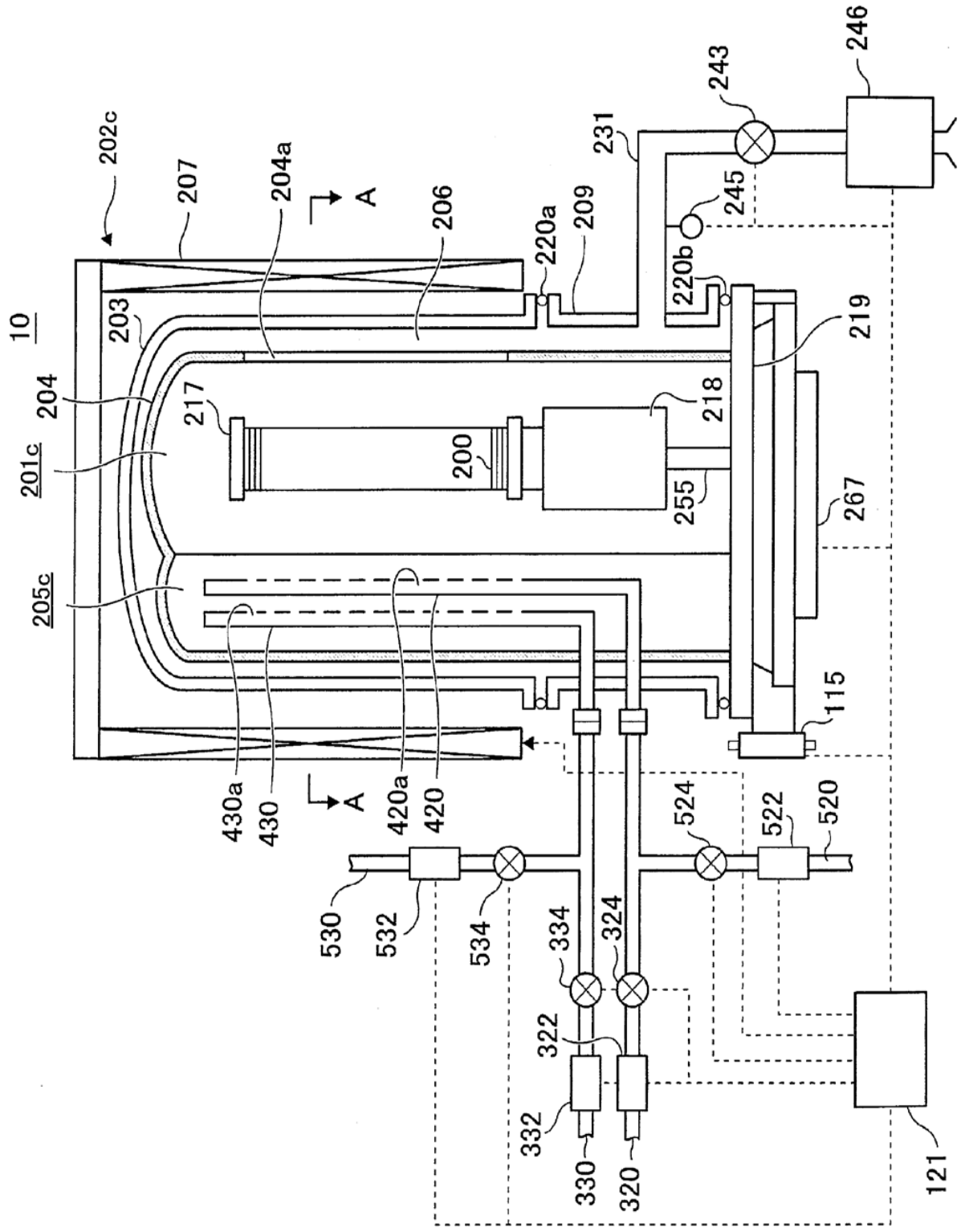
10
202c
207
204a
A
206
220a
209
231
243
246
245
220b
219
203
204
201c
217
218
200
255
267
205c
115
430a
430
420a
420
524
522
520
530
532
534
334
324
322
332
330
320
121

[Figure 7]

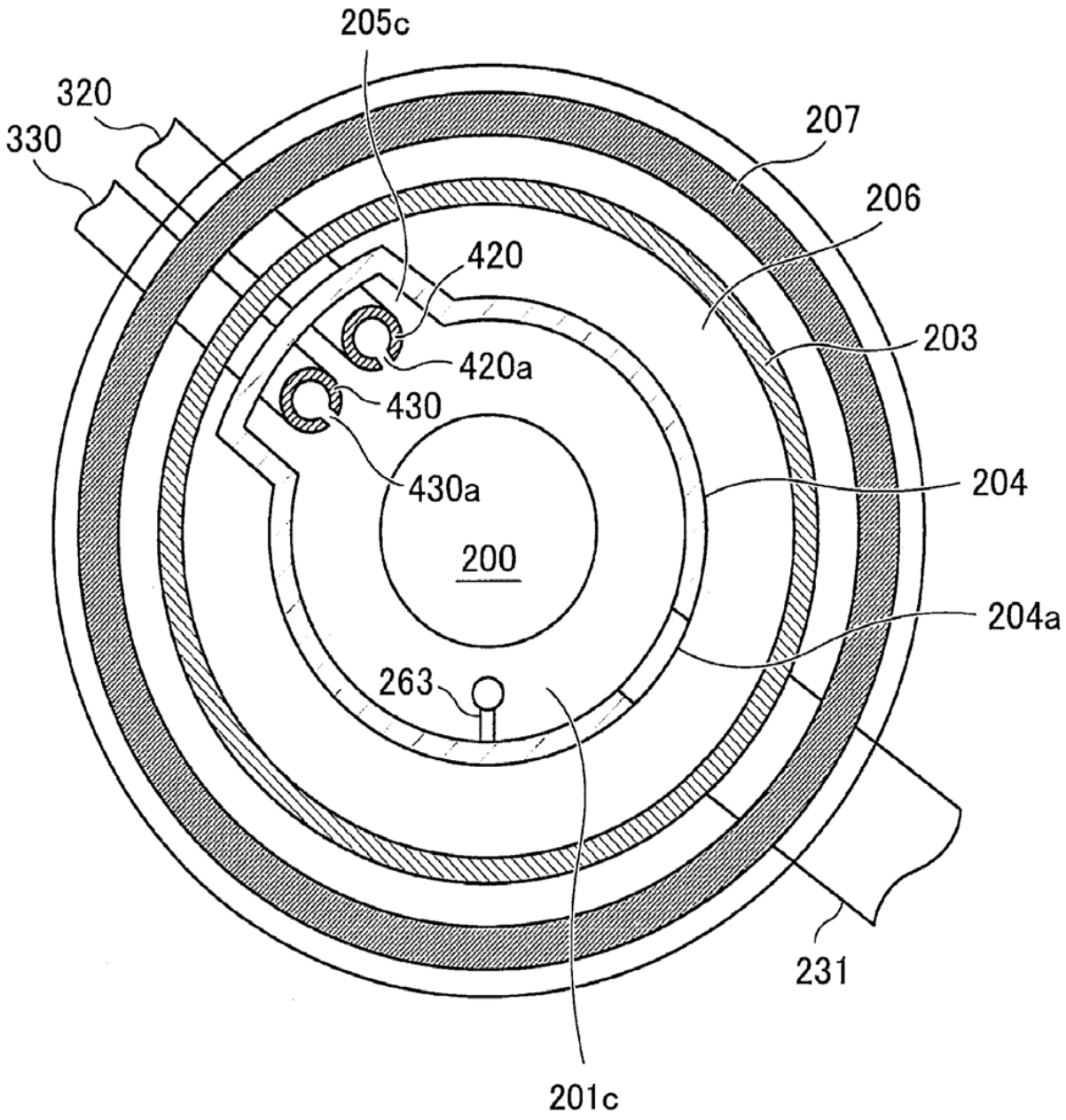
202c
205c
320
330
207
206
420
203
420a
430
430a
204
200
204a
263
231
201c

[Figure 8]

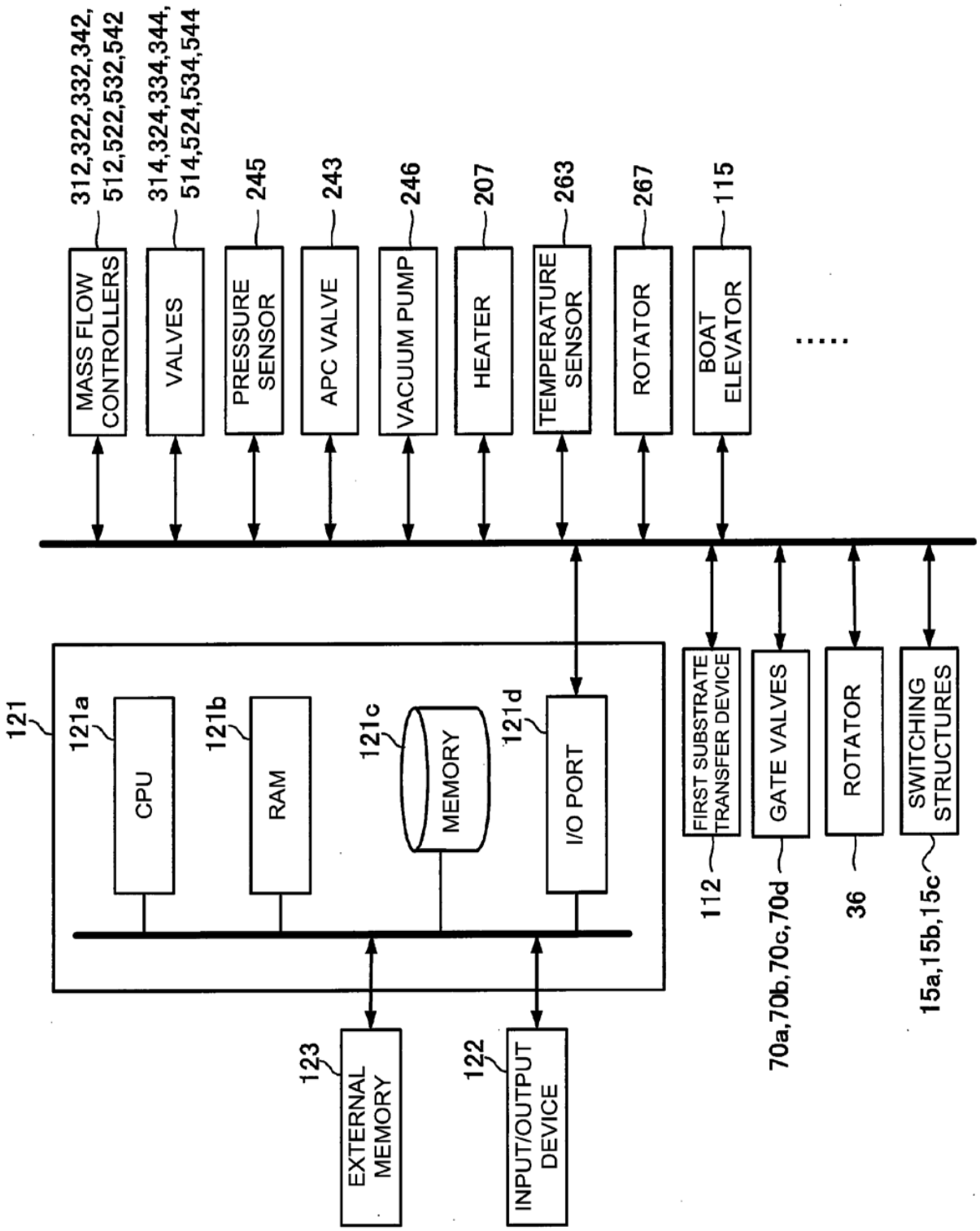
312,322,332,342,
512,522,532,542
314,324,334,344,
514,524,534,544
245
243
246
207
263
267
115
MASS FLOW CONTROLLERS
VALVES
PRESSURE SENSOR
APC VALVE
VACUUM PUMP
HEATER
TEMPERATURE SENSOR
ROTATOR
BOAT ELEVATOR
121
121a
CPU
121b
RAM
121c
MEMORY
121d
I/O PORT
123
EXTERNAL MEMORY
122
INPUT/OUTPUT DEVICE
FIRST SUBSTRATE TRANSFER DEVICE
GATE VALVES
ROTATOR
SWITCHING STRUCTURES
112
70a,70b,70c,70d
36
15a,15b,15c

[Figure 9]

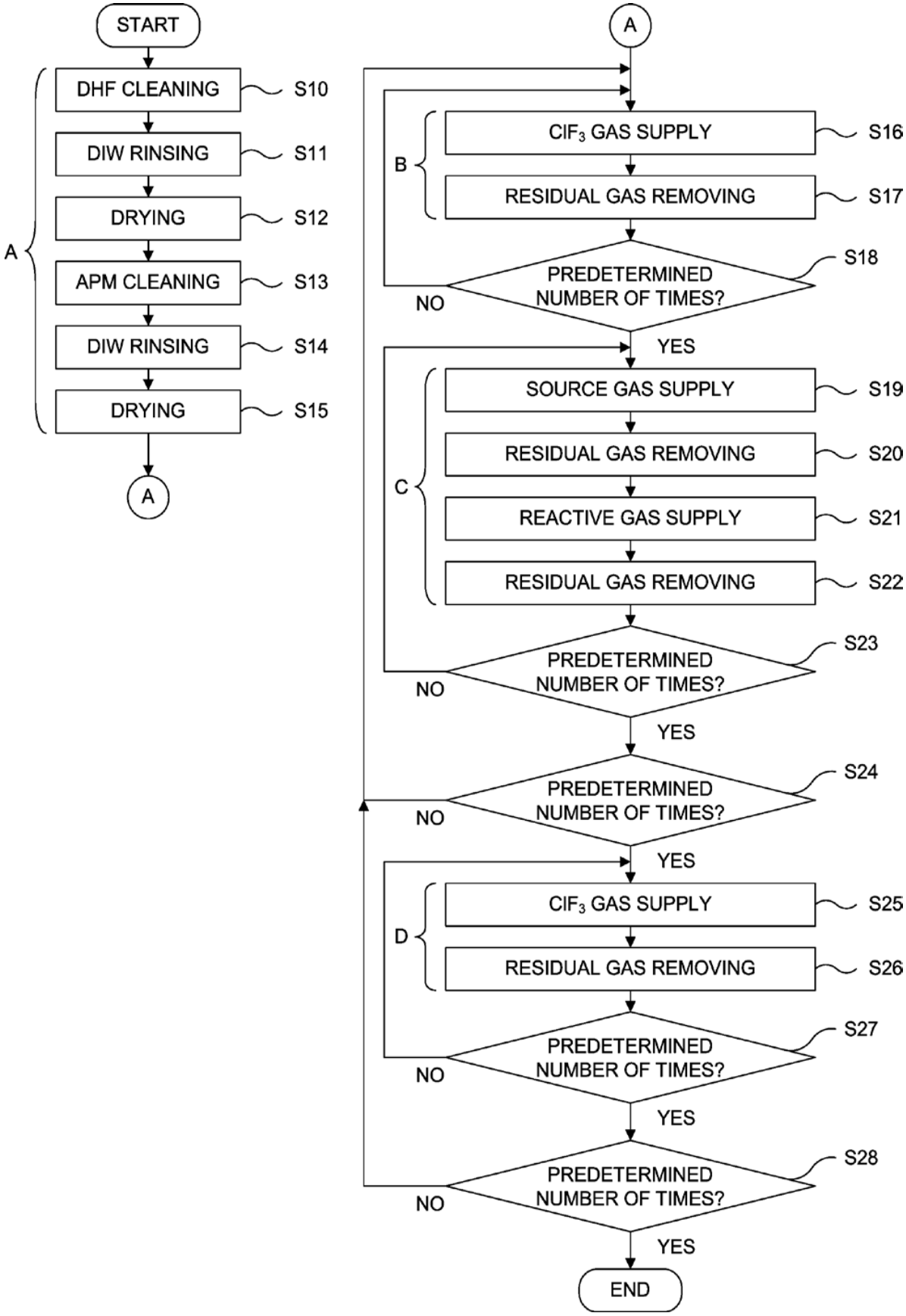
START
DHF CLEANING
S10
DIW RINSING
S11
DRYING
S12
APM CLEANING
S13
DIW RINSING
S14
DRYING
S15
A
A
A
B
ClF3 GAS SUPPLY
S16
RESIDUAL GAS REMOVING
S17
PREDETERMINED NUMBER OF TIMES?
S18
NO
YES
C
SOURCE GAS SUPPLY
S19
RESIDUAL GAS REMOVING
S20
REACTIVE GAS SUPPLY
S21
RESIDUAL GAS REMOVING
S22
PREDETERMINED NUMBER OF TIMES?
S23
NO
YES
PREDETERMINED NUMBER OF TIMES?
S24
NO
YES
D
ClF3 GAS SUPPLY
S25
RESIDUAL GAS REMOVING
S26
PREDETERMINED NUMBER OF TIMES?
S27
NO
YES
PREDETERMINED NUMBER OF TIMES?
S28
NO
YES
END

[Figure 10]

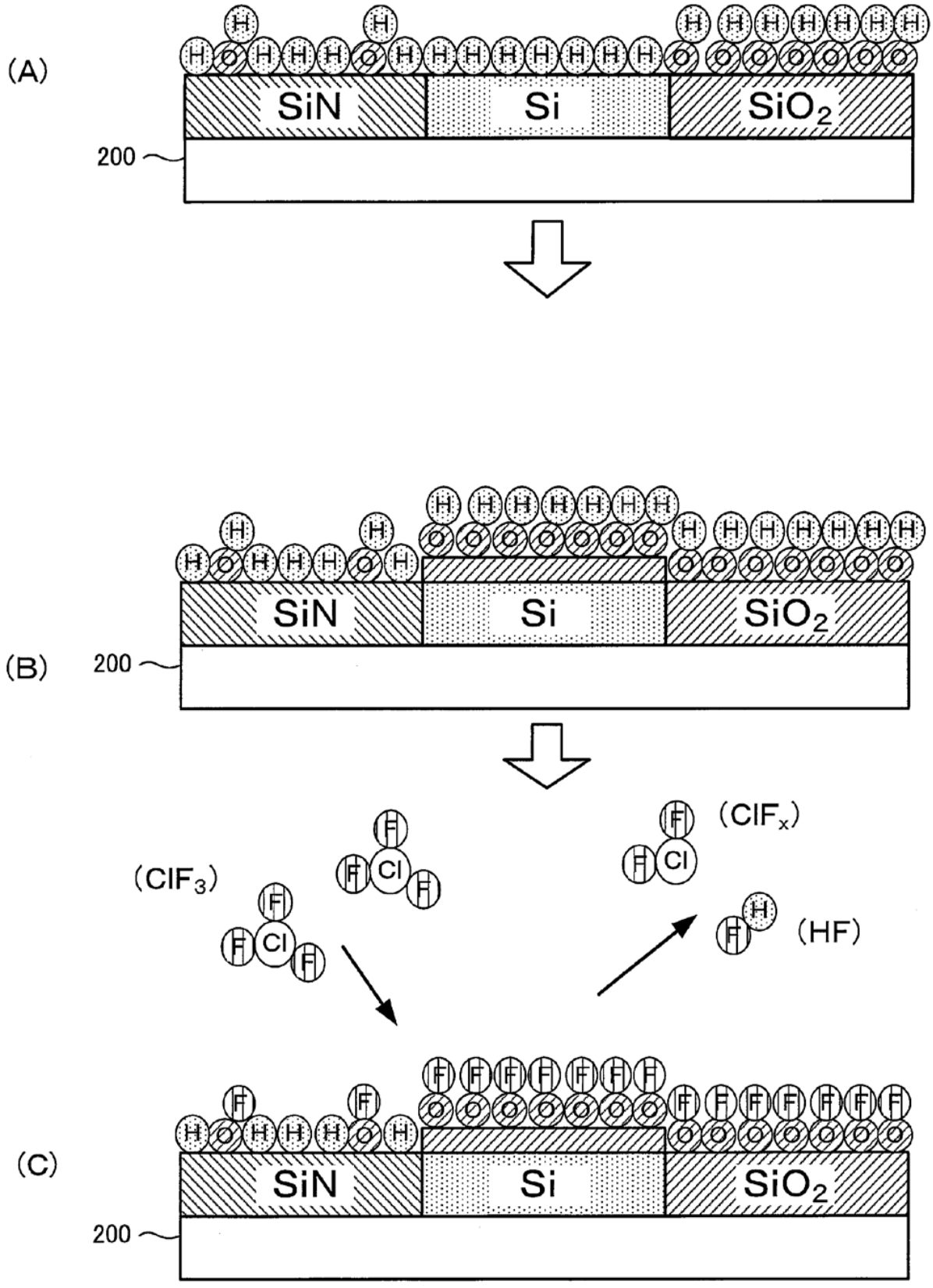
(A)
SiN
Si
SiO_2
200
(B)
SiN
Si
SiO_2
200
(ClF_3)
Cl
(ClF_x)
Cl
H
(HF)
(C)
SiN
Si
SiO_2
200

[Figure 11]

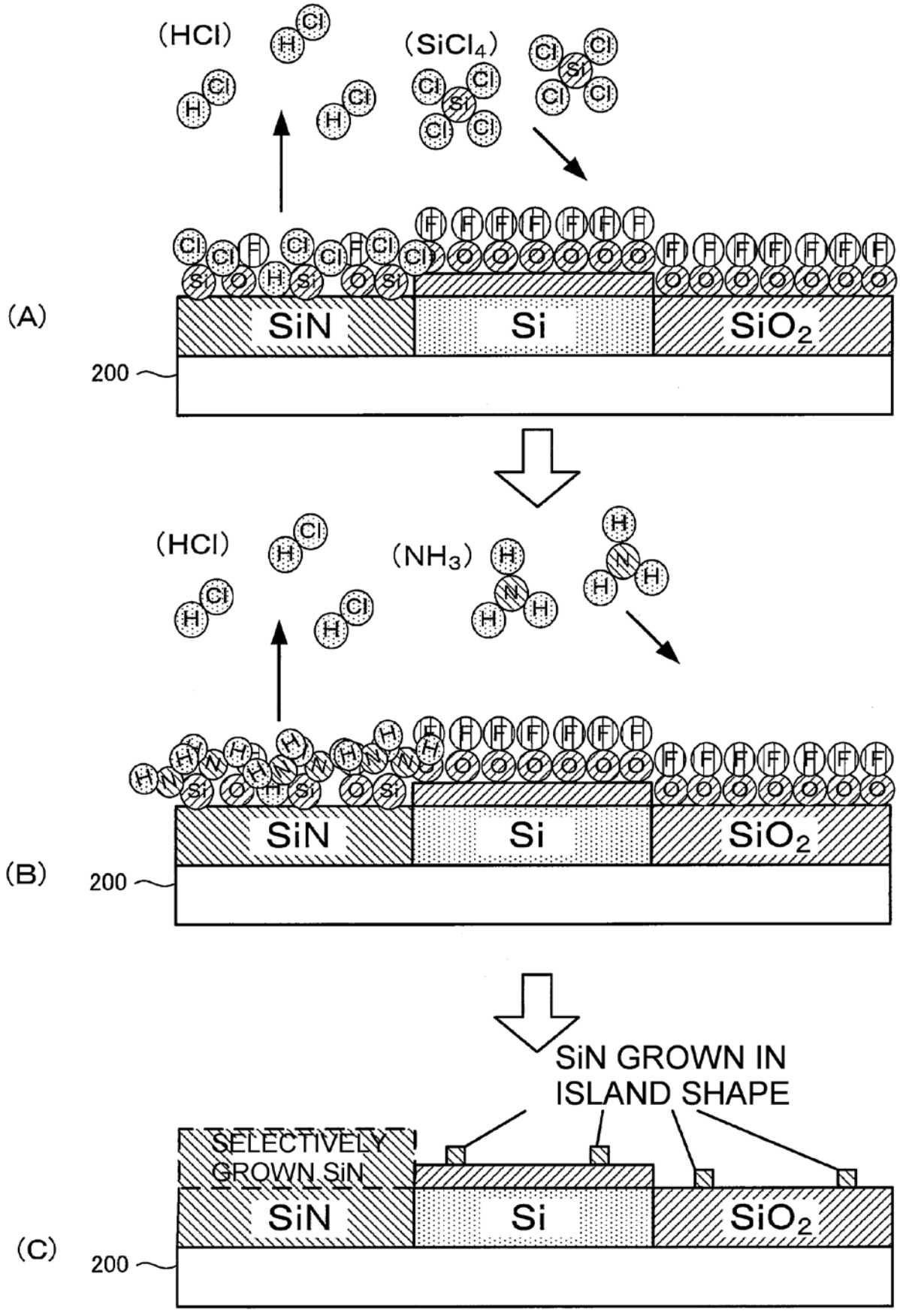
(HCl)
(SiCl4)
(A)
SiN
Si
SiO2
200
(HCl)
(NH3)
(B)
SiN
Si
SiO2
200
SiN GROWN IN ISLAND SHAPE
SELECTIVELY GROWN SiN
(C)
SiN
Si
SiO2
200

[Figure 12]

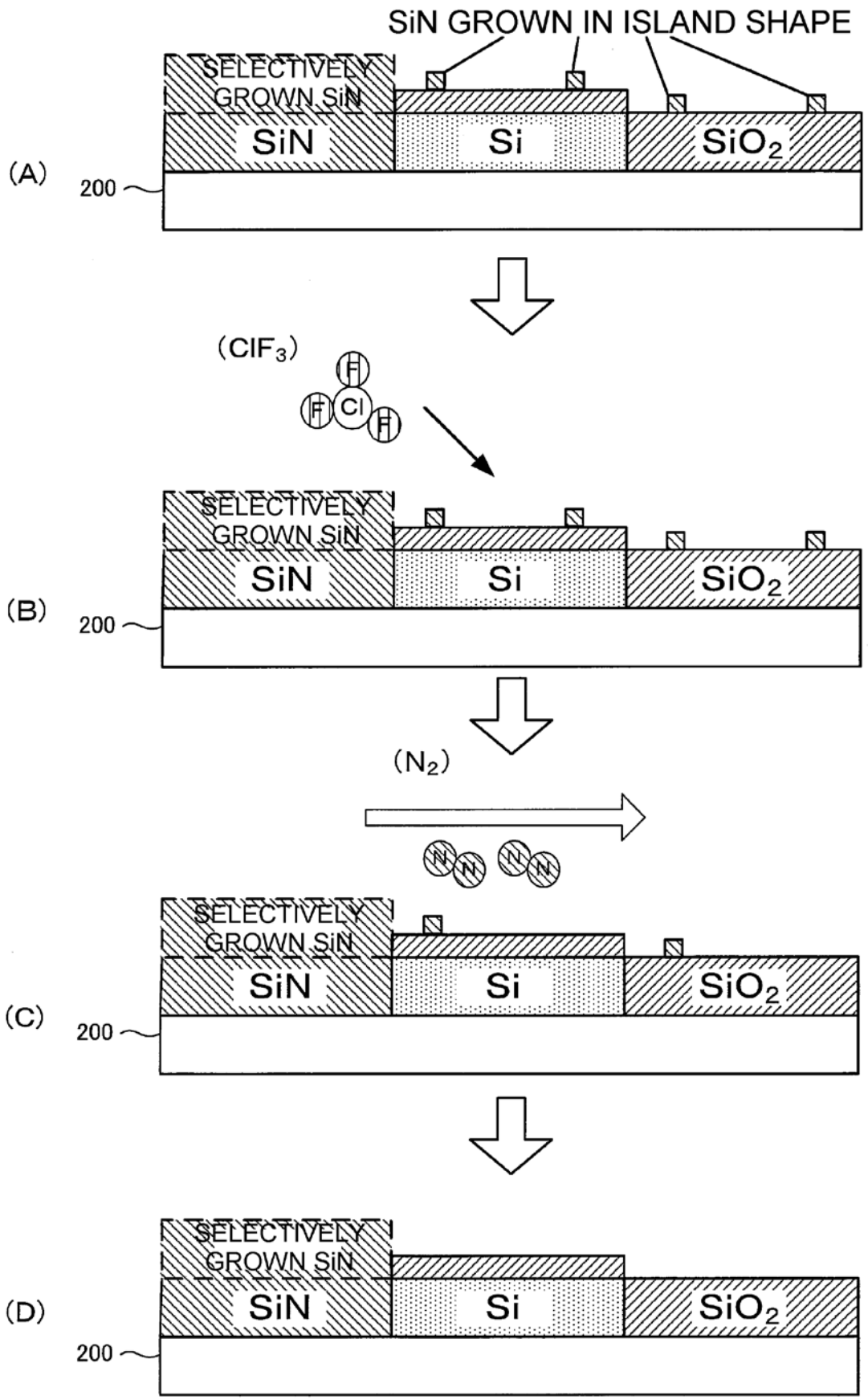
SiN GROWN IN ISLAND SHAPE
SELECTIVELY GROWN SiN
SiN
Si
SiO2
(A)
200
(ClF3)
F
Cl
(B)
(N2)
N
(C)
(D)

[Figure 13]

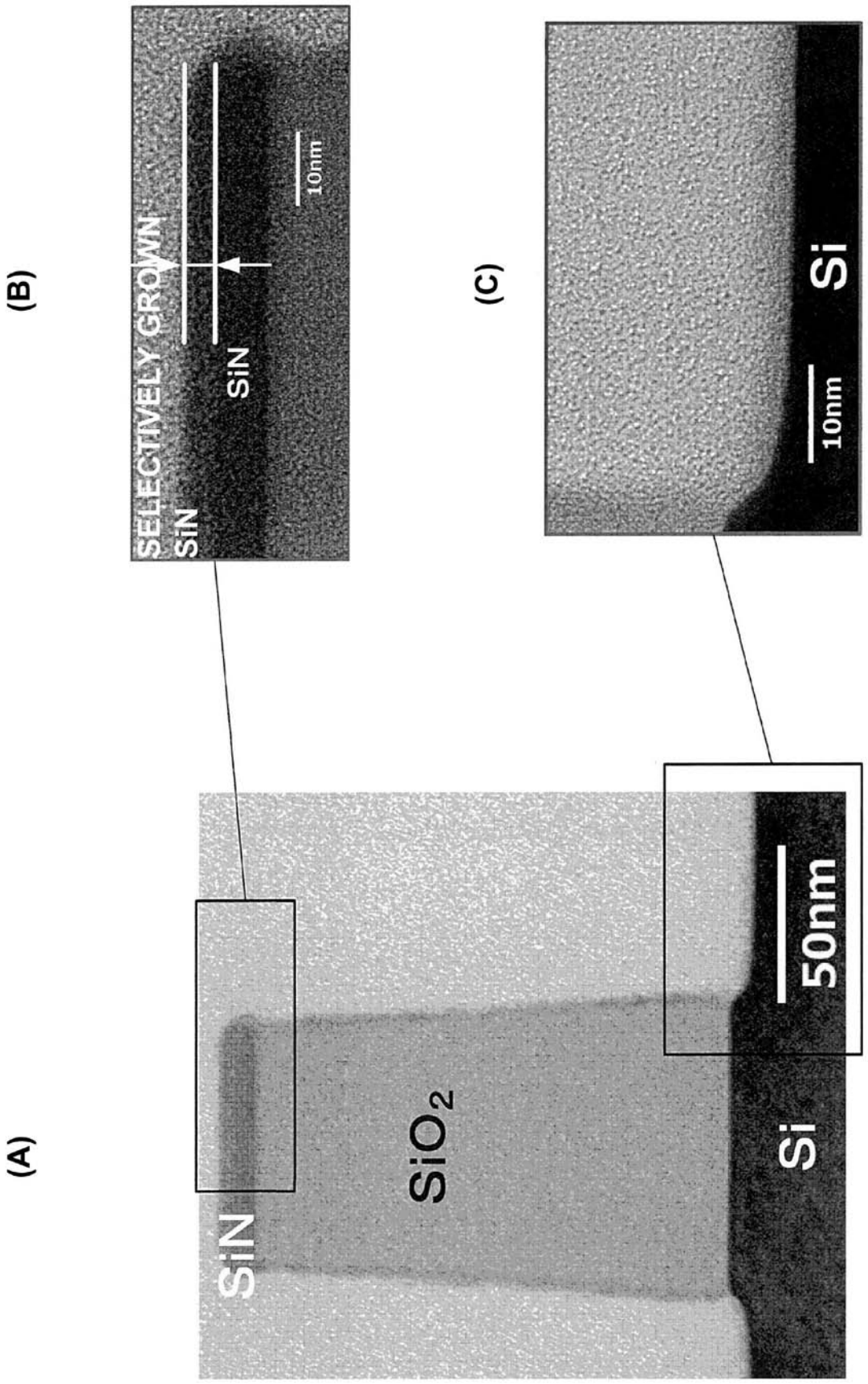

[Figure 14]

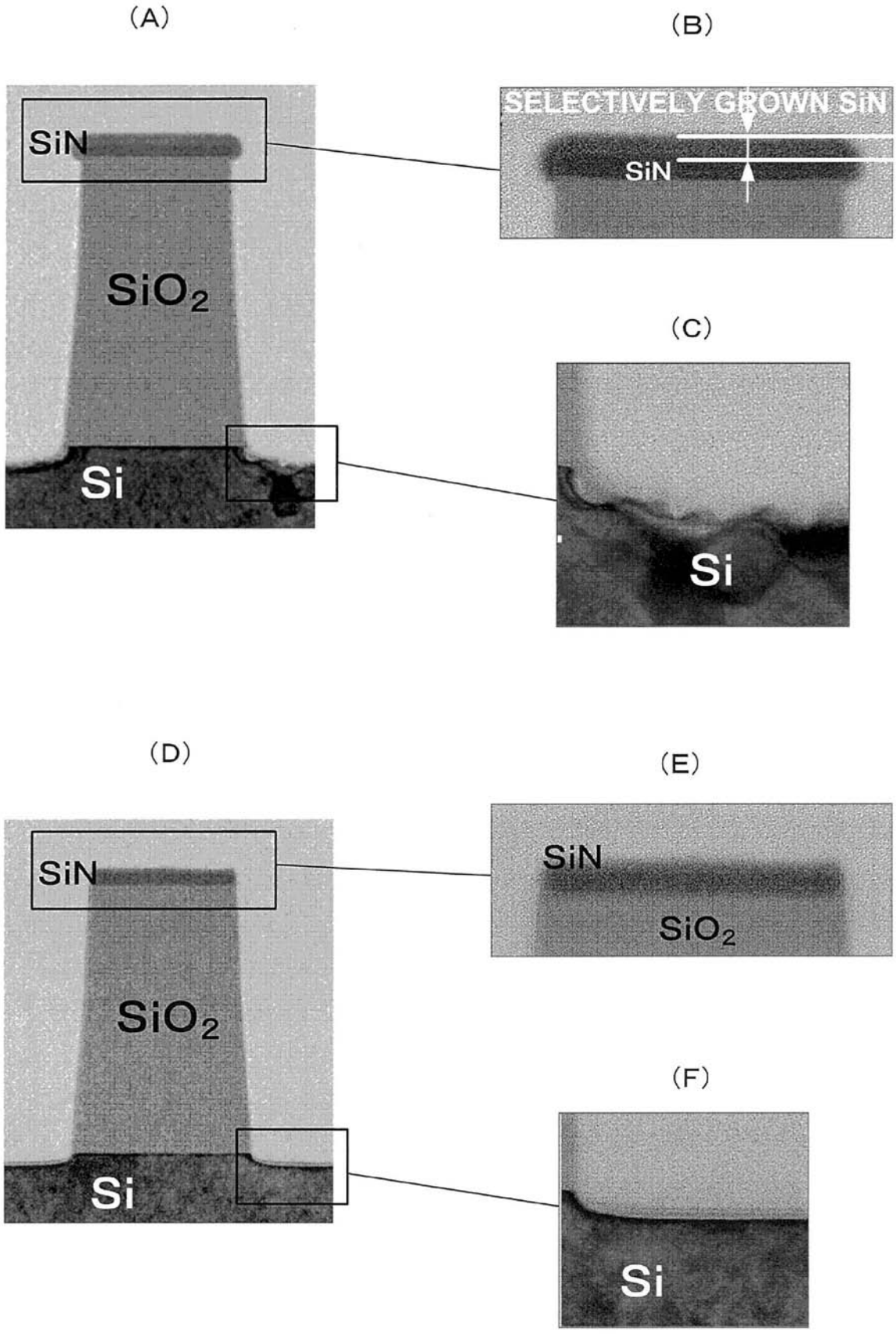
(A)
SiN
SiO_2
Si
(B)
SELECTIVELY GROWN SiN
SiN
(C)
Si
(D)
SiN
SiO_2
Si
(E)
SiN
SiO_2
(F)
Si

[Figure 15]

(A)

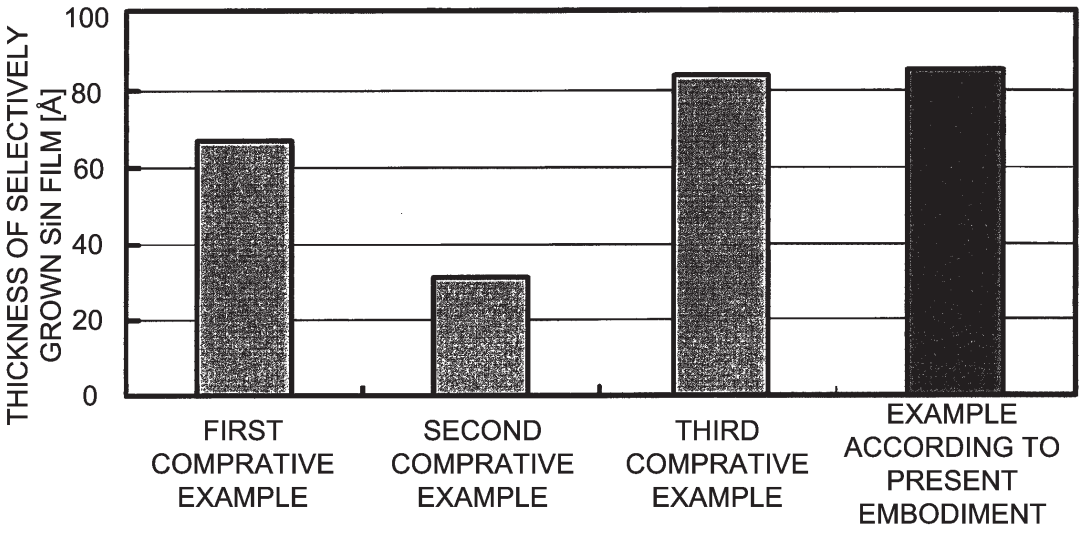
THICKNESS OF SELECTIVELY GROWN SiN FILM [Å]
100
80
60
40
20
0
FIRST COMPRATIVE EXAMPLE
SECOND COMPRATIVE EXAMPLE
THIRD COMPRATIVE EXAMPLE
EXAMPLE ACCORDING TO PRESENT EMBODIMENT

(B)

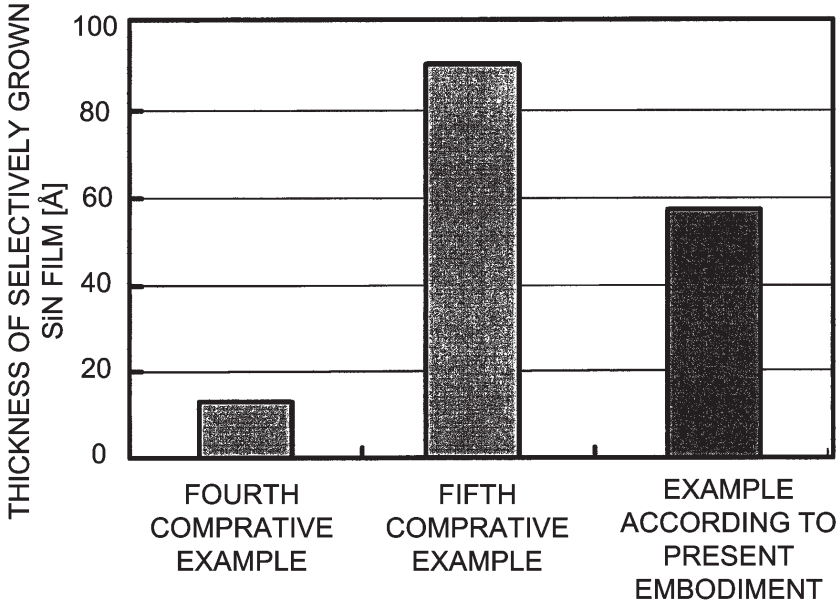
THICKNESS OF SELECTIVELY GROWN SiN FILM [Å]
100
80
60
40
20
0
FOURTH COMPRATIVE EXAMPLE
FIFTH COMPRATIVE EXAMPLE
EXAMPLE ACCORDING TO PRESENT EMBODIMENT

[Figure 16]

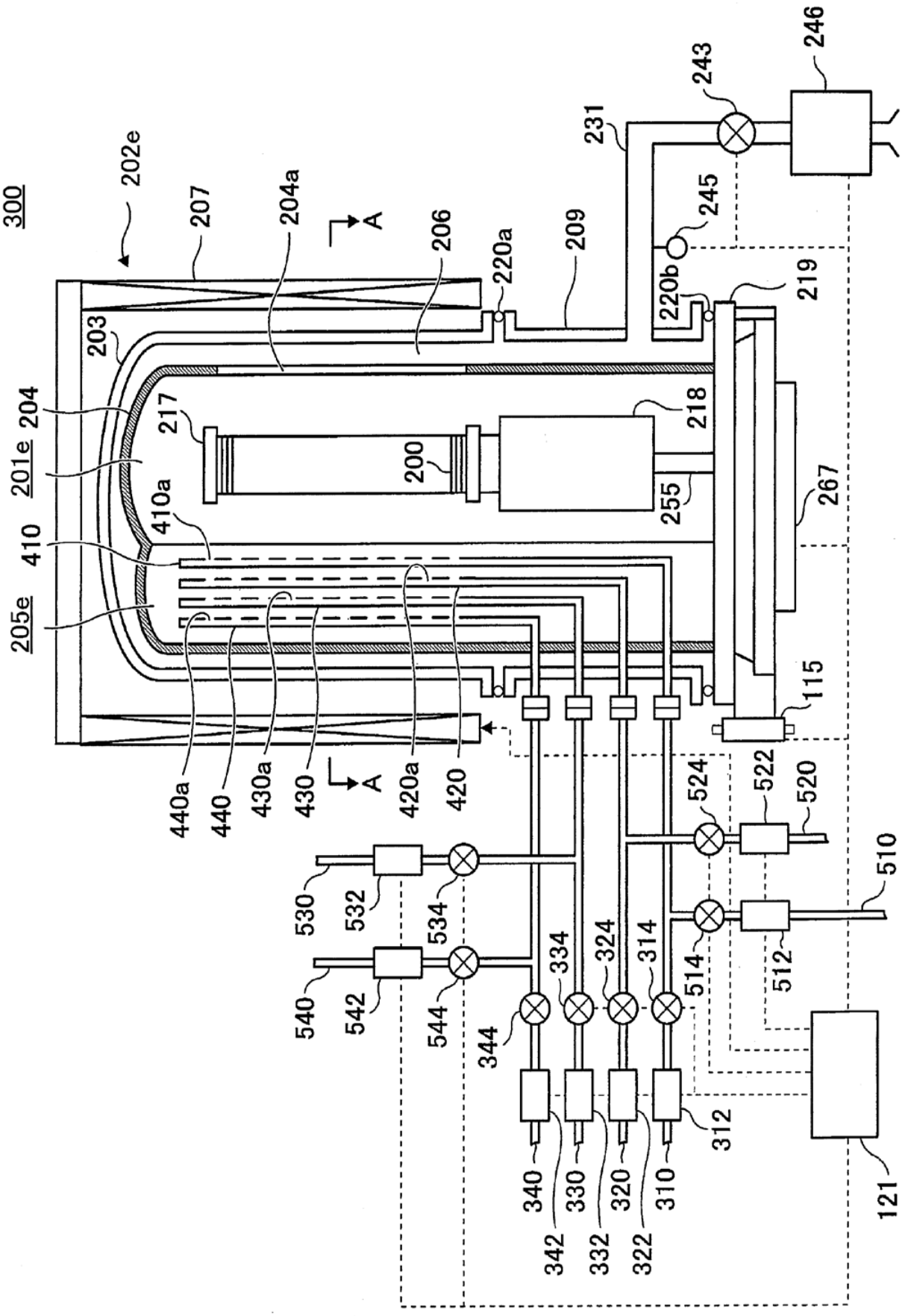
300
202e
207
204a
A
206
220a
209
231
243
246
245
220b
219
203
204
201e
205e
410
217
200
218
255
267
410a
440a
440
430a
430
420a
420
115
524
522
520
510
530
532
534
540
542
544
344
334
324
314
514
512
340
330
320
310
342
332
322
312
121

[Figure 17]

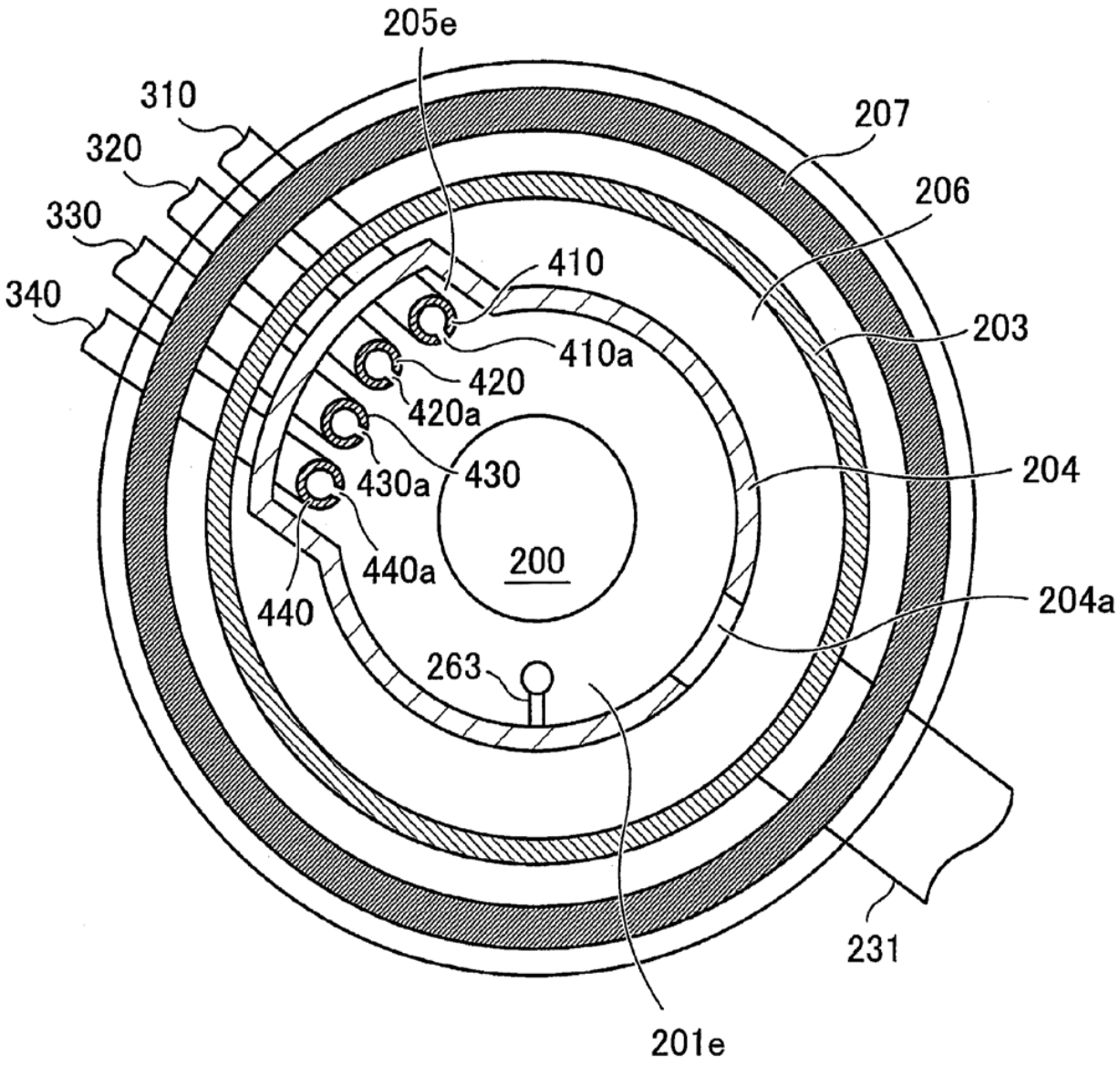
202e
205e
310
320
330
340
207
206
410
410a
203
420
420a
430
430a
204
440a
200
440
204a
263
231
201e