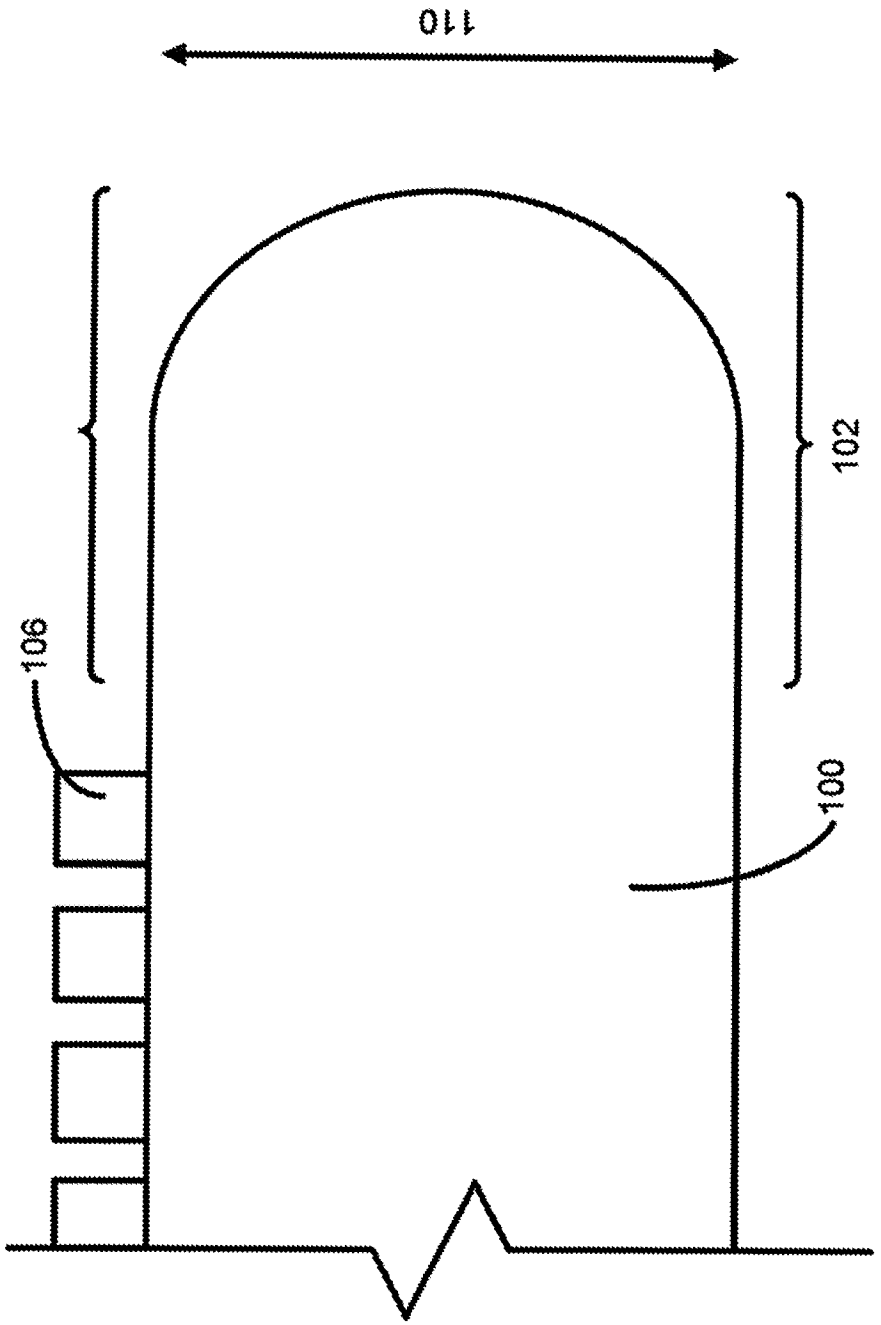

FIG. 1A

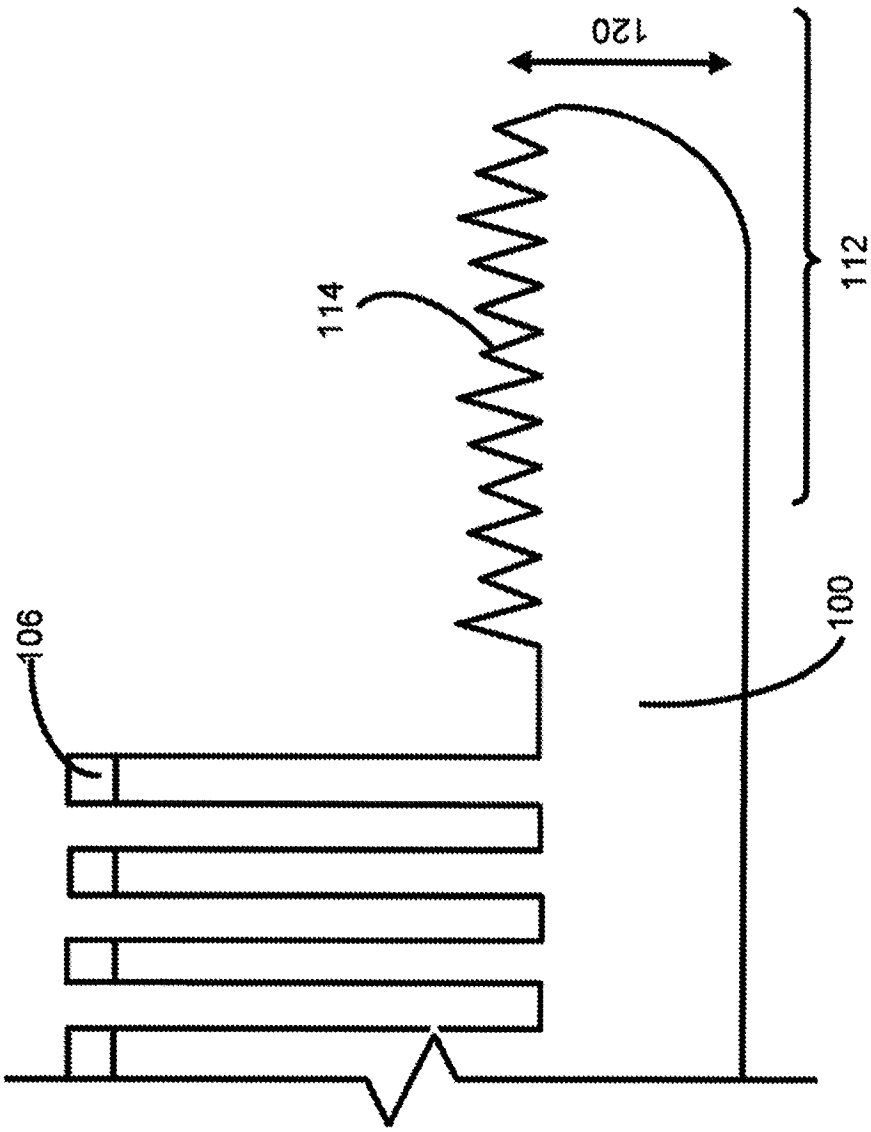

FIG. 1B

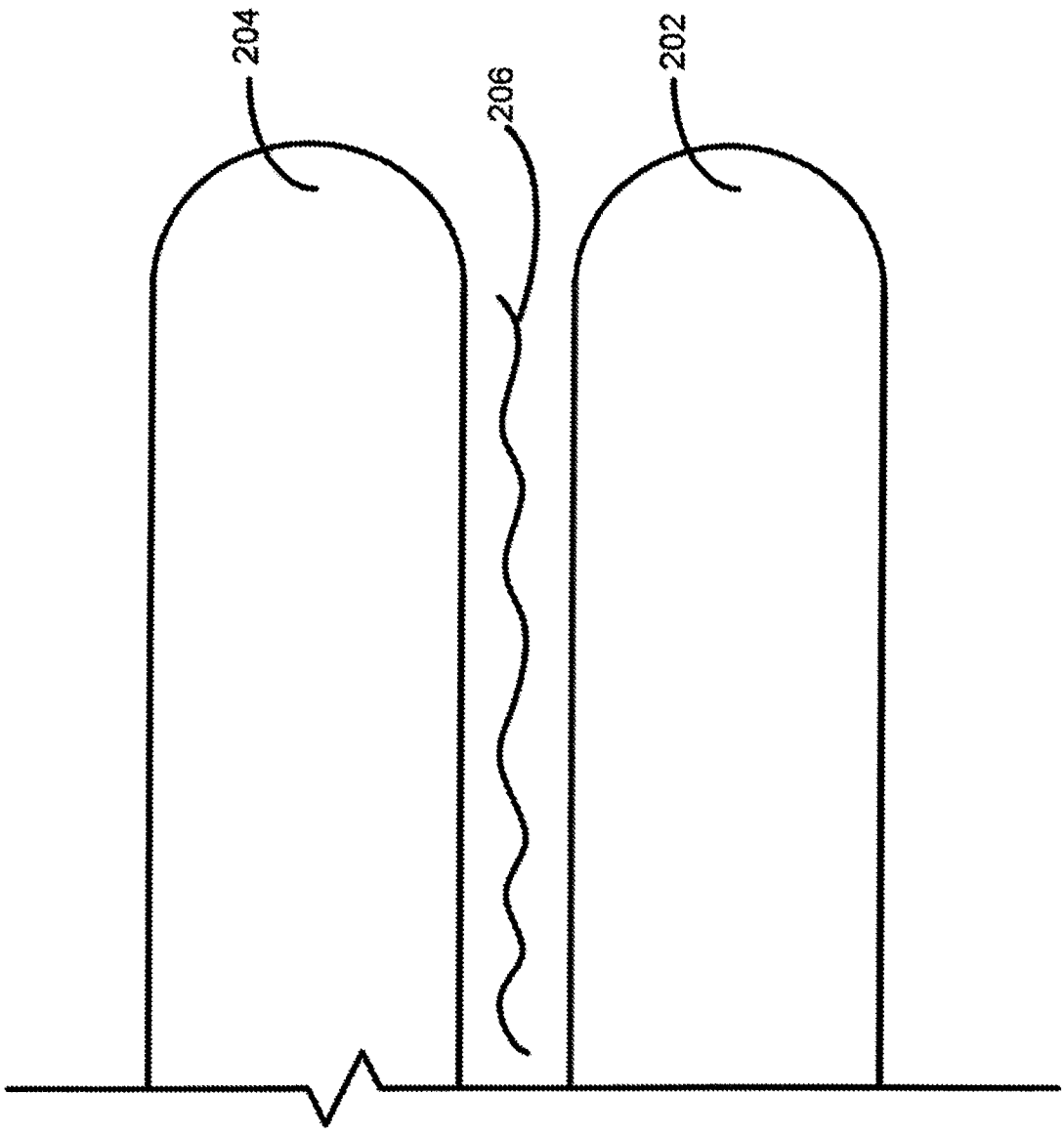

FIG. 2A

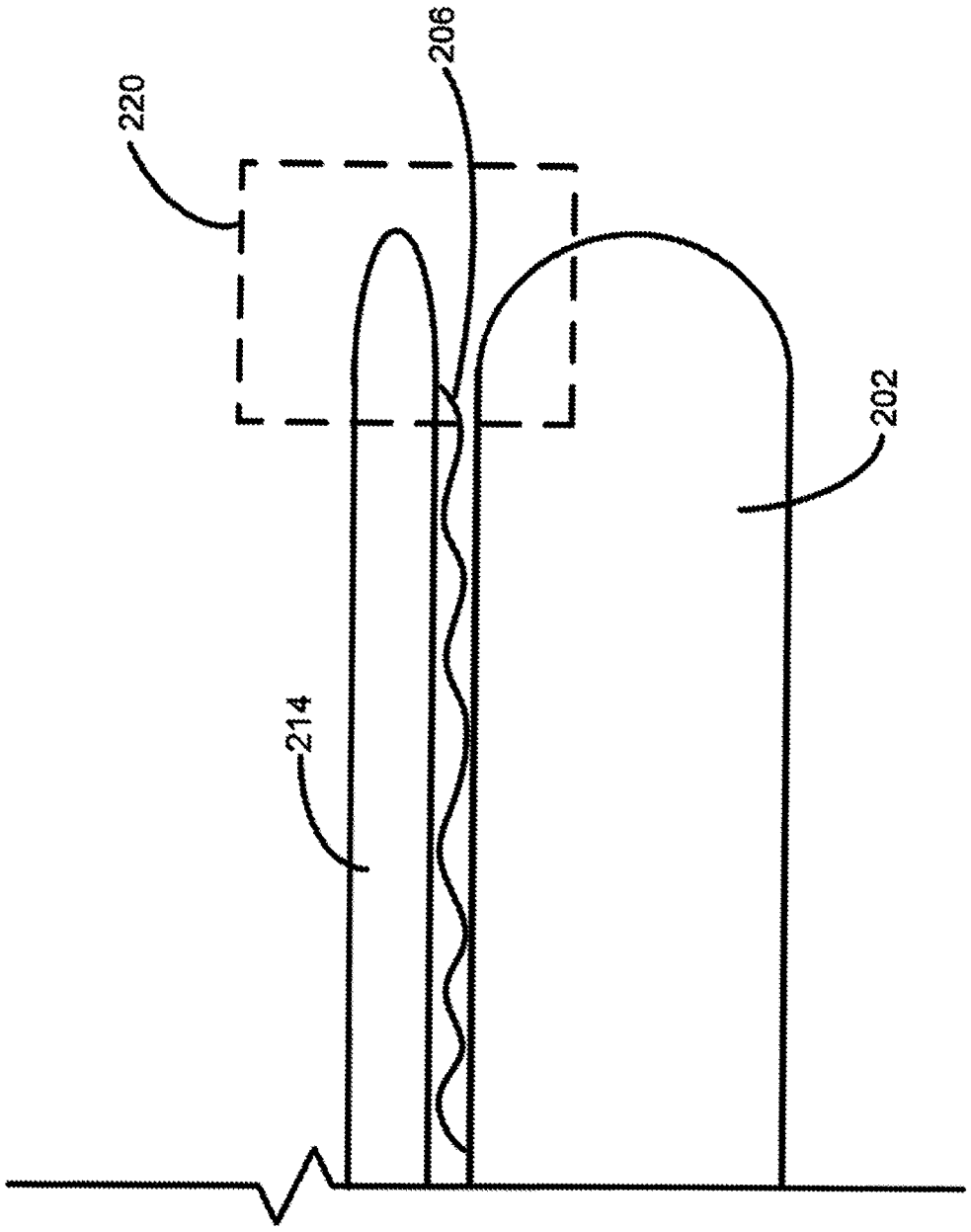

FIG. 2B

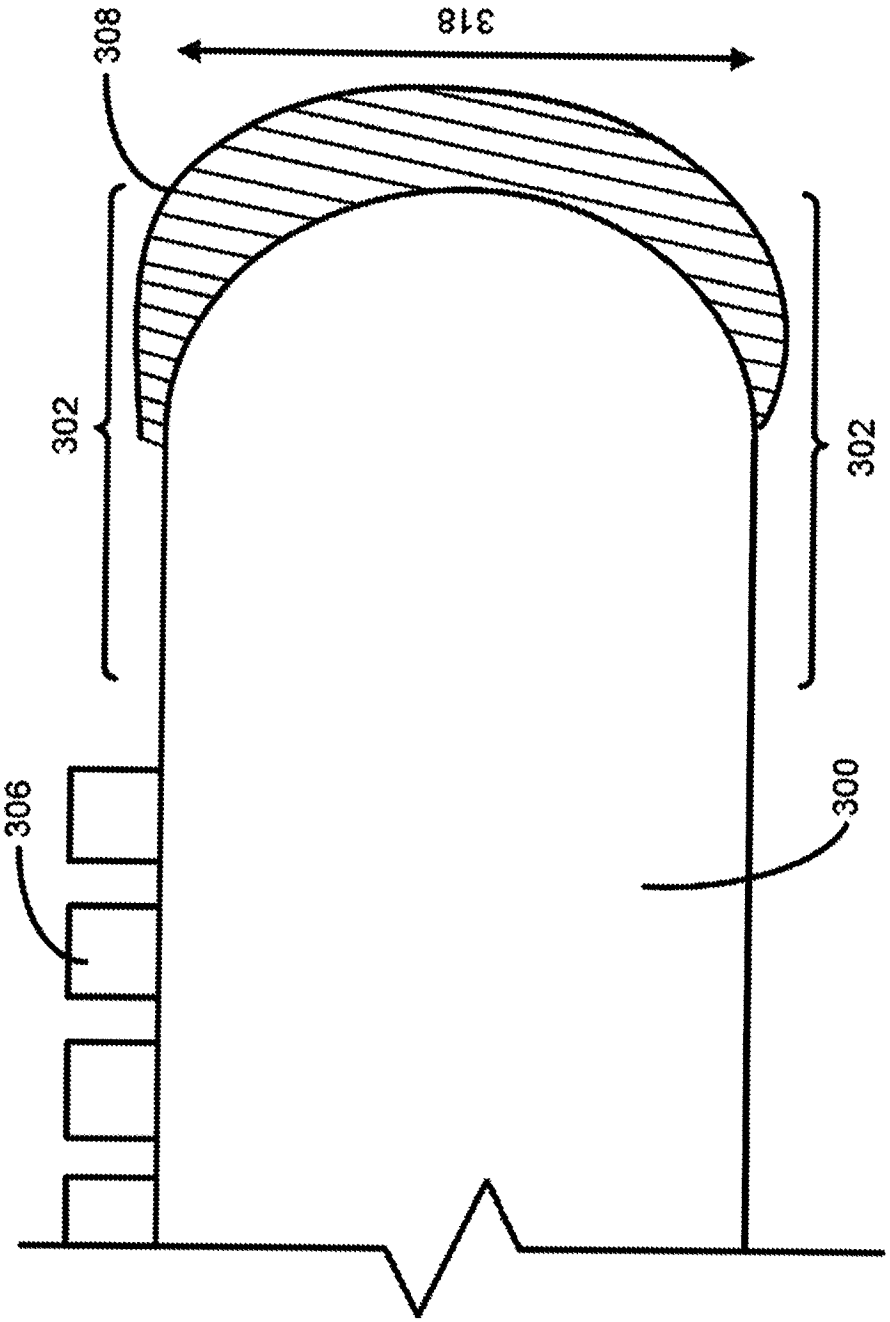

FIG. 3A

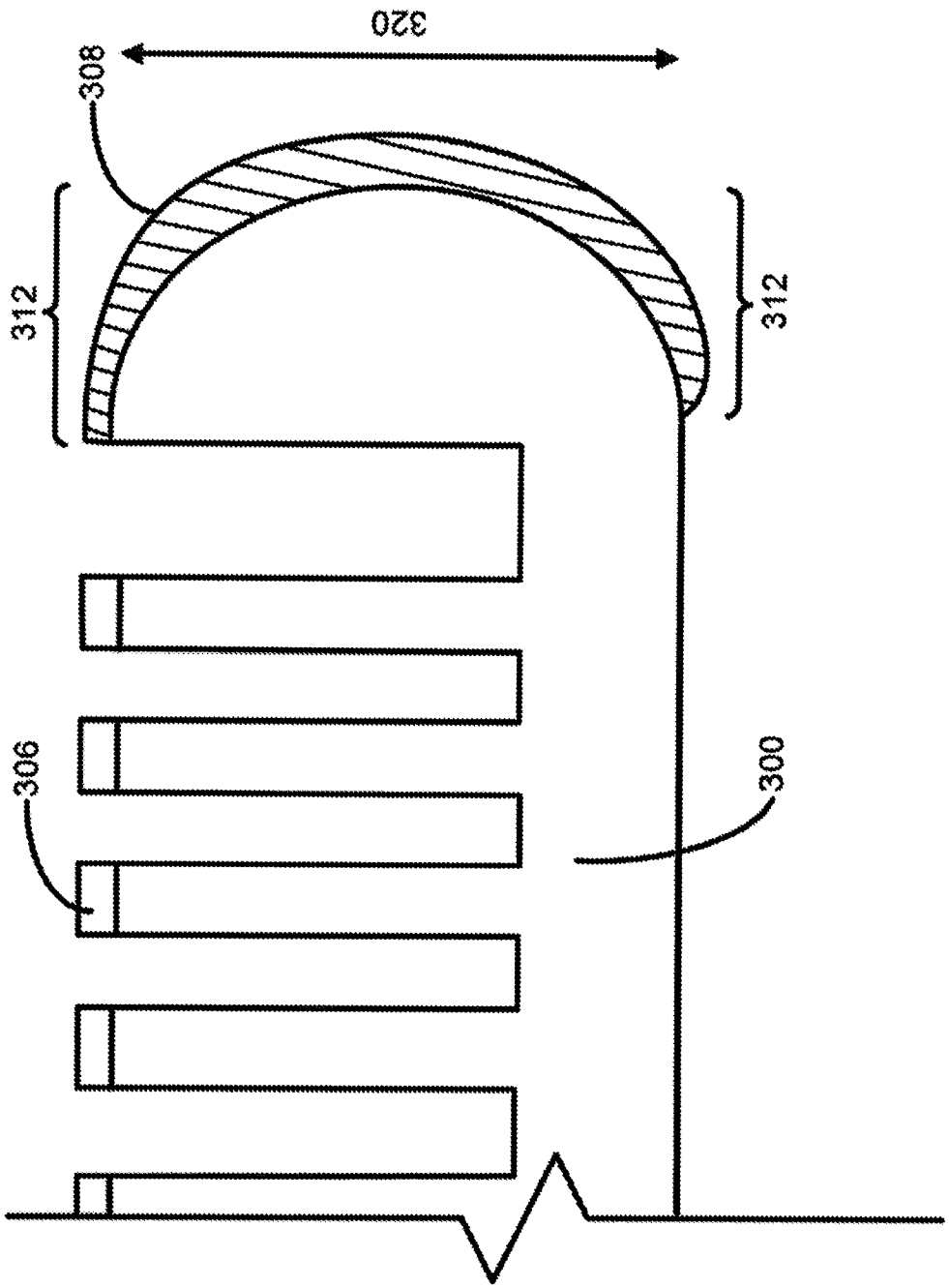

FIG. 3B

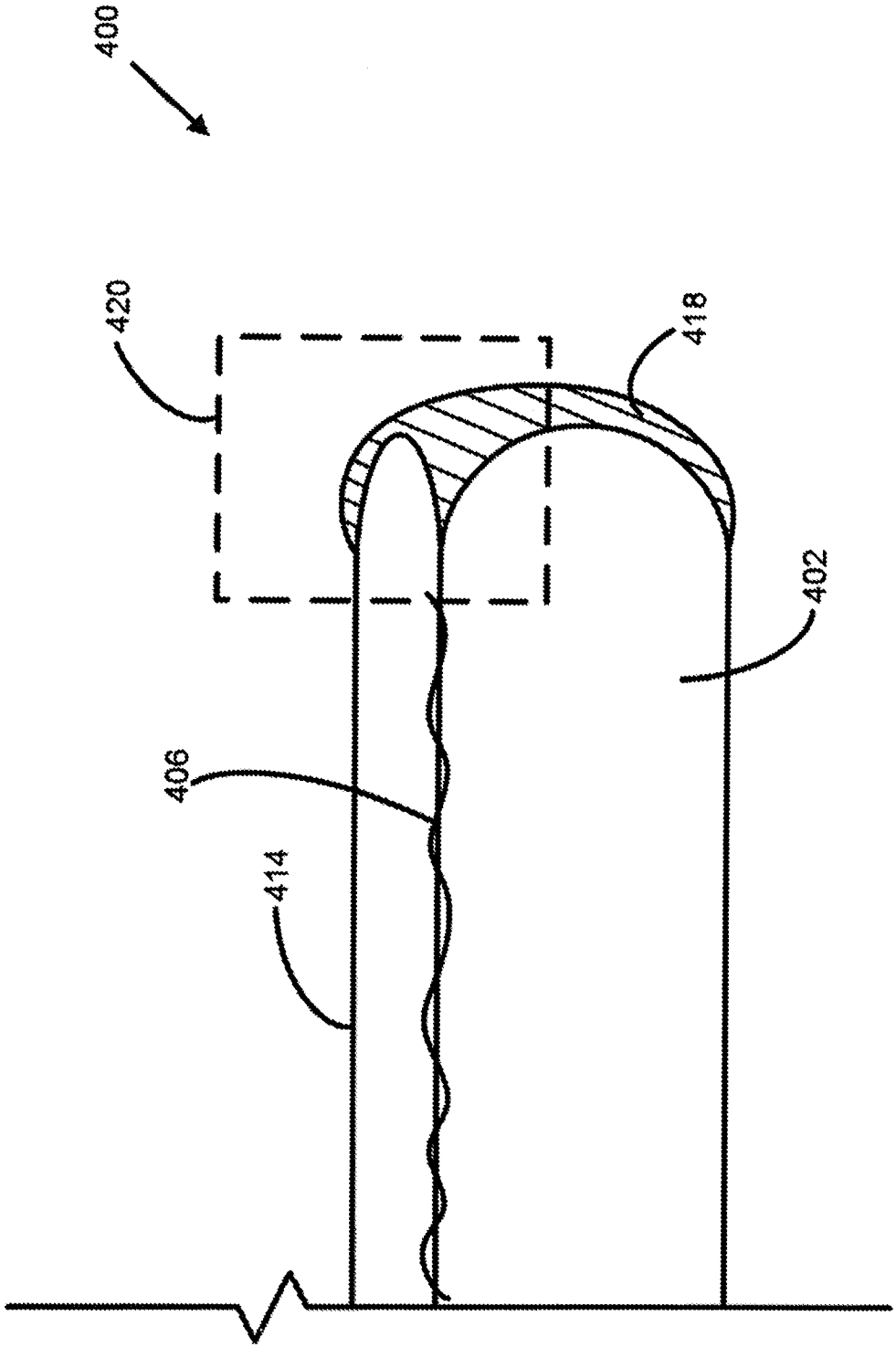

FIG. 4

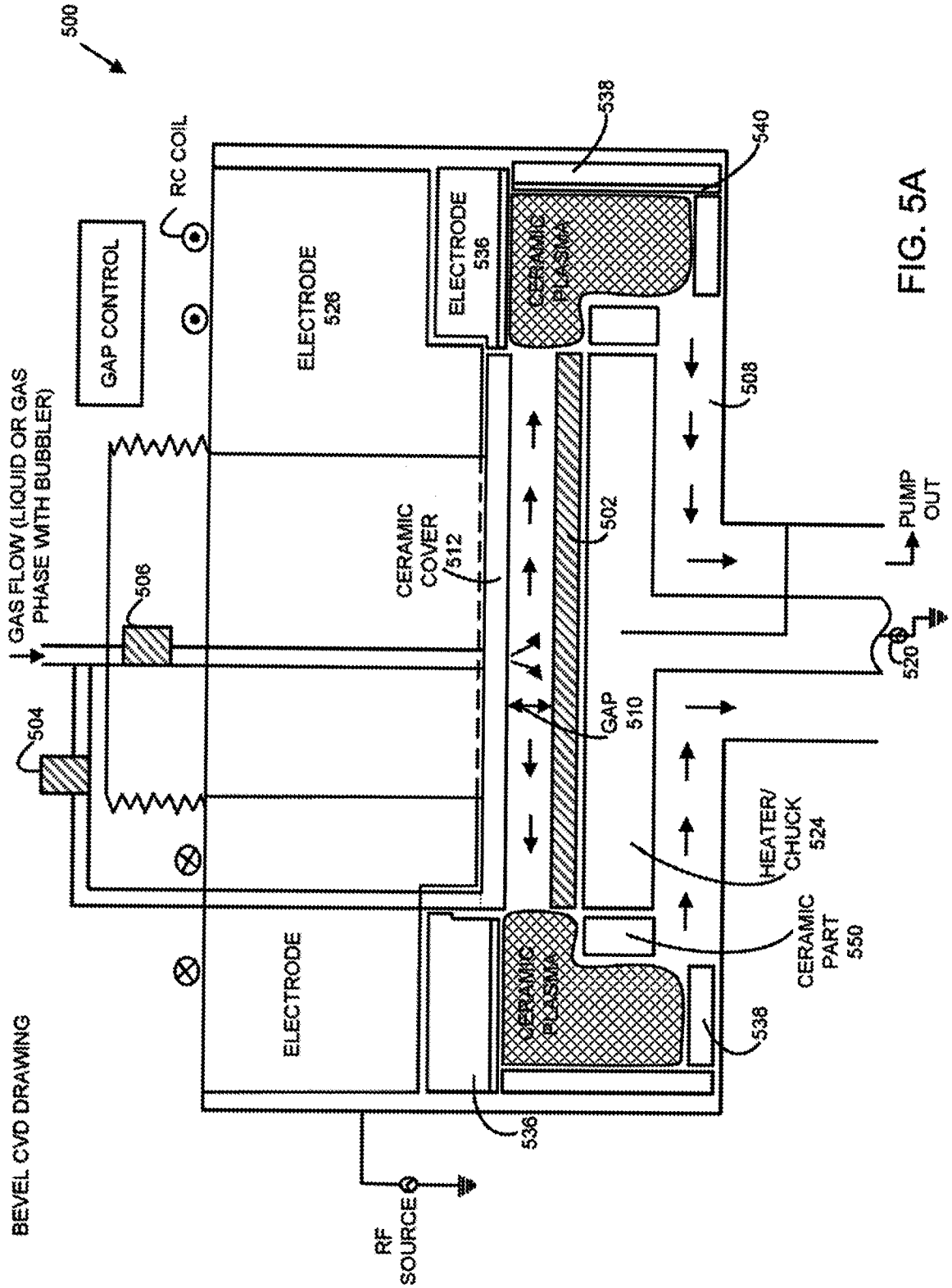
500
RC COIL
GAP CONTROL
ELECTRODE 526
ELECTRODE 536
538
540
CERAMIC PLASMA
508
GAS FLOW (LIQUID OR GAS PHASE WITH BUBBLER)
506
CERAMIC COVER 512
502
PUMP OUT
504
520
GAP 510
HEATER/ CHUCK 524
CERAMIC PART 550
ELECTRODE
CERAMIC PLASMA
538
536
RF SOURCE
BEVEL CVD DRAWING

FIG. 5A

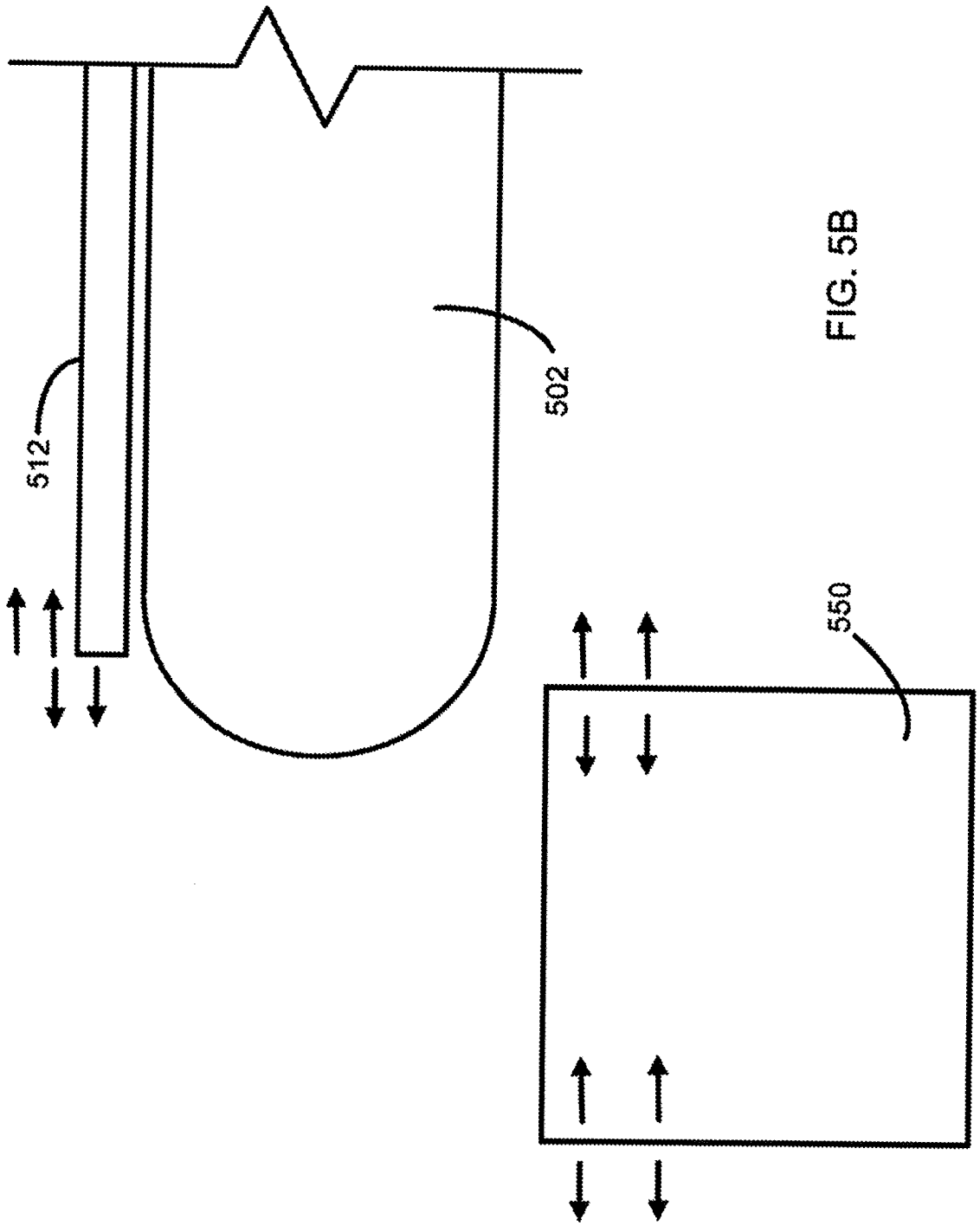

FIG. 5B

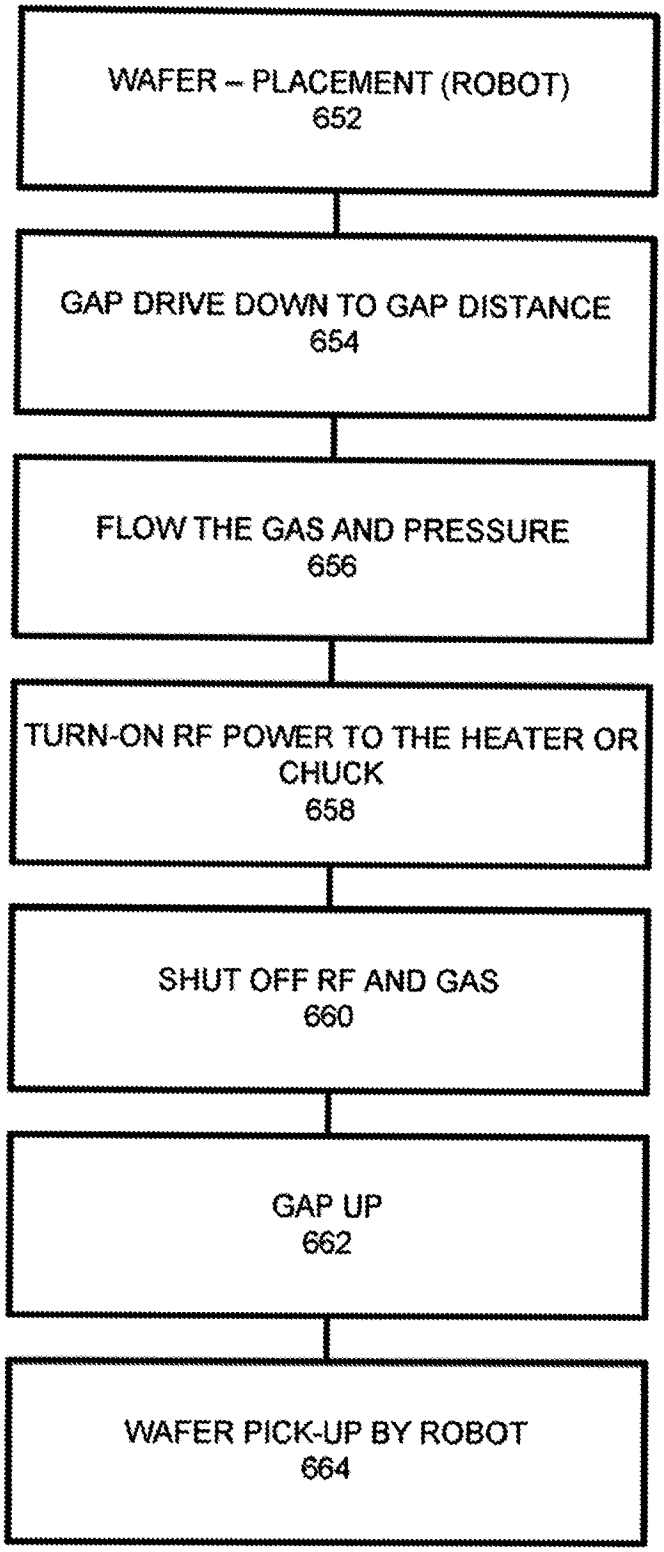
WAFER – PLACEMENT (ROBOT)
652
GAP DRIVE DOWN TO GAP DISTANCE
654
FLOW THE GAS AND PRESSURE
656
TURN-ON RF POWER TO THE HEATER OR CHUCK
658
SHUT OFF RF AND GAS
660
GAP UP
662
WAFER PICK-UP BY ROBOT
664

FIG. 6

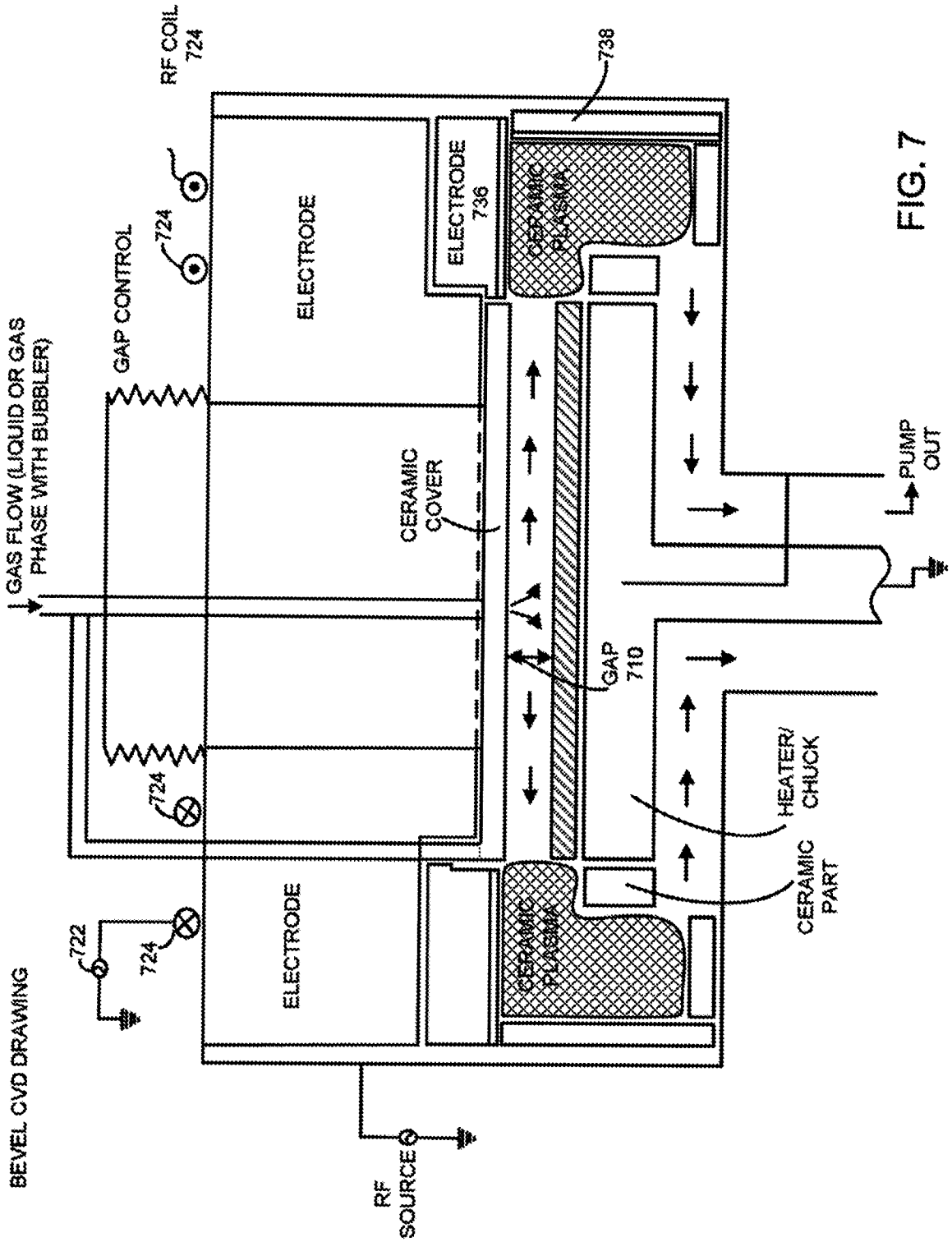
BEVEL CVD DRAWING
GAS FLOW (LIQUID OR GAS PHASE WITH BUBBLER)
GAP CONTROL
RF COIL
724
722
ELECTRODE
ELECTRODE 736
738
CERAMIC PLASMA
CERAMIC COVER
GAP 710
HEATER/ CHUCK
CERAMIC PART
PUMP OUT
RF SOURCE

FIG. 7

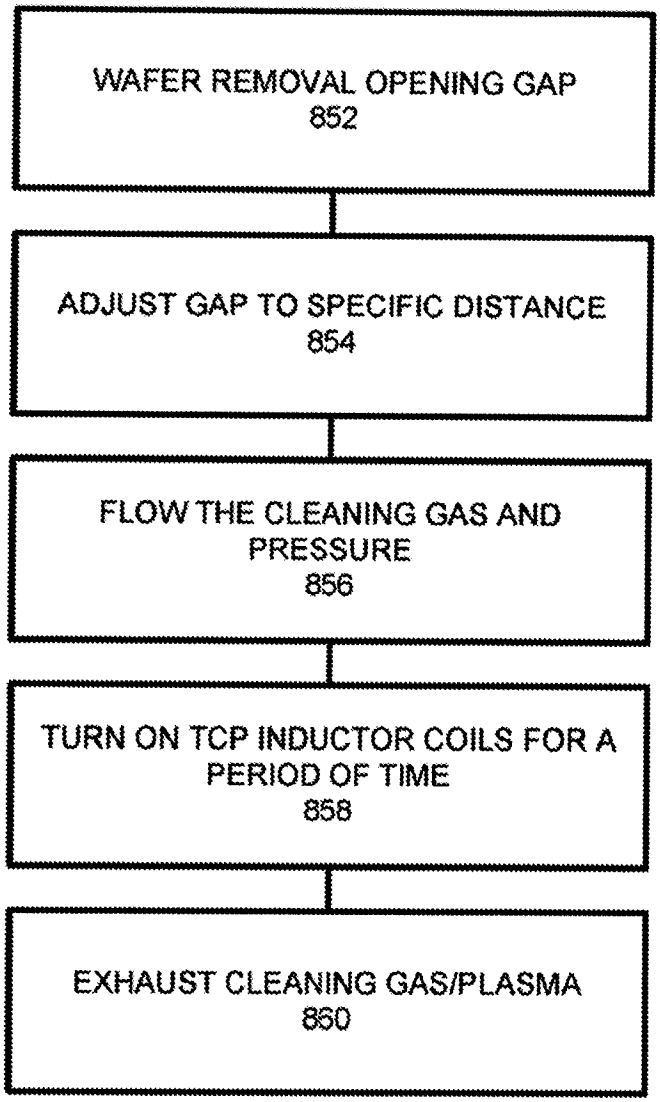
WAFER REMOVAL OPENING GAP
852
ADJUST GAP TO SPECIFIC DISTANCE
854
FLOW THE CLEANING GAS AND PRESSURE
856
TURN ON TCP INDUCTOR COILS FOR A PERIOD OF TIME
858
EXHAUST CLEANING GAS/PLASMA
860

FIG. 8