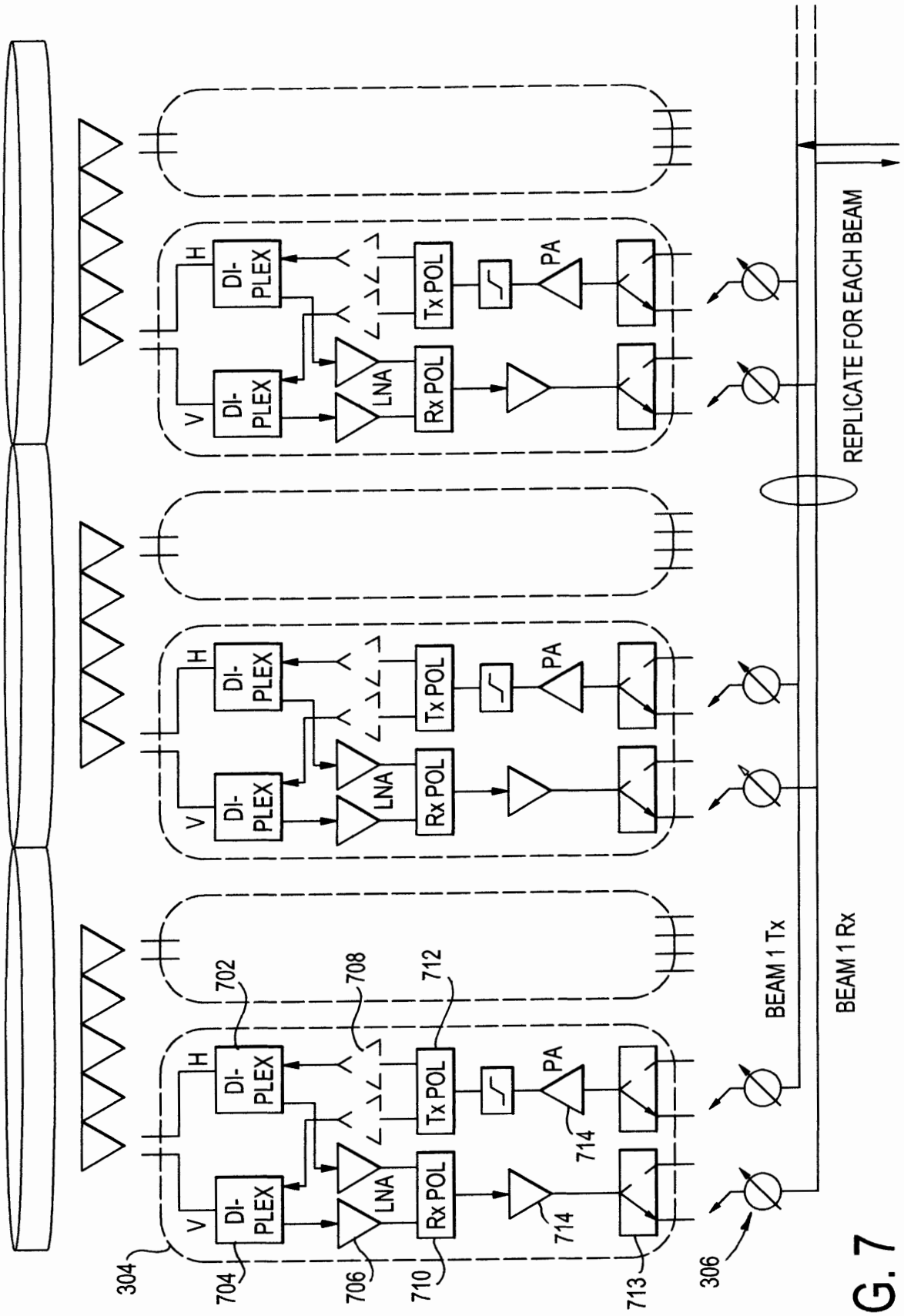
304
704
706
710
713
306
702
708
712
714
714
V
H
DI-PLEX
LNA
Rx POL
Tx POL
PA
BEAM 1 Tx
BEAM 1 Rx
REPLICATE FOR EACH BEAM

FIG. 7

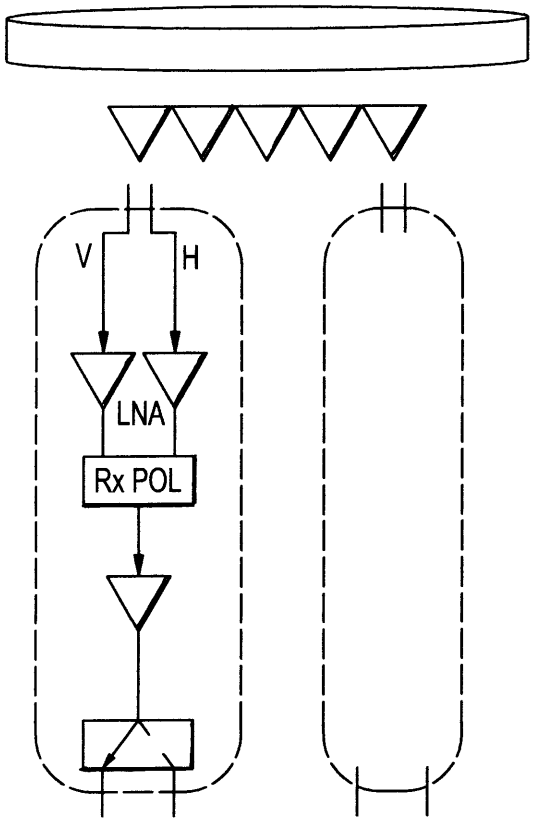

FIG. 9a

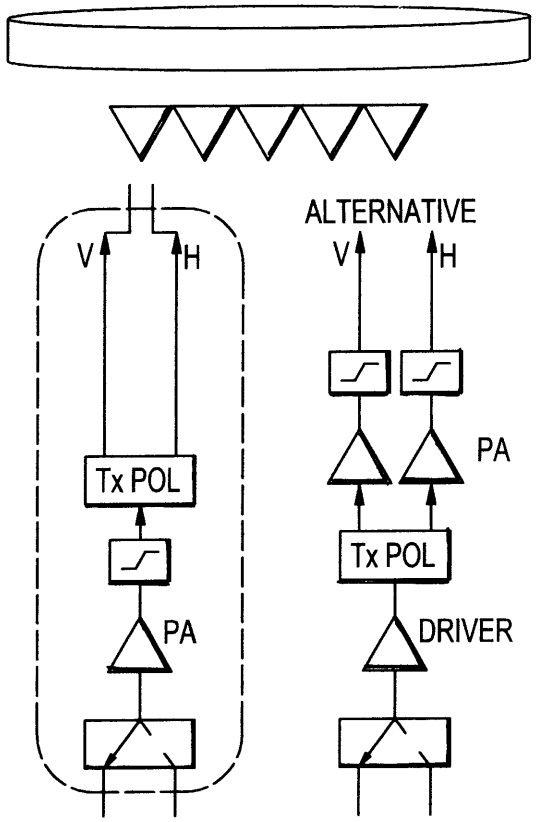

FIG. 9b

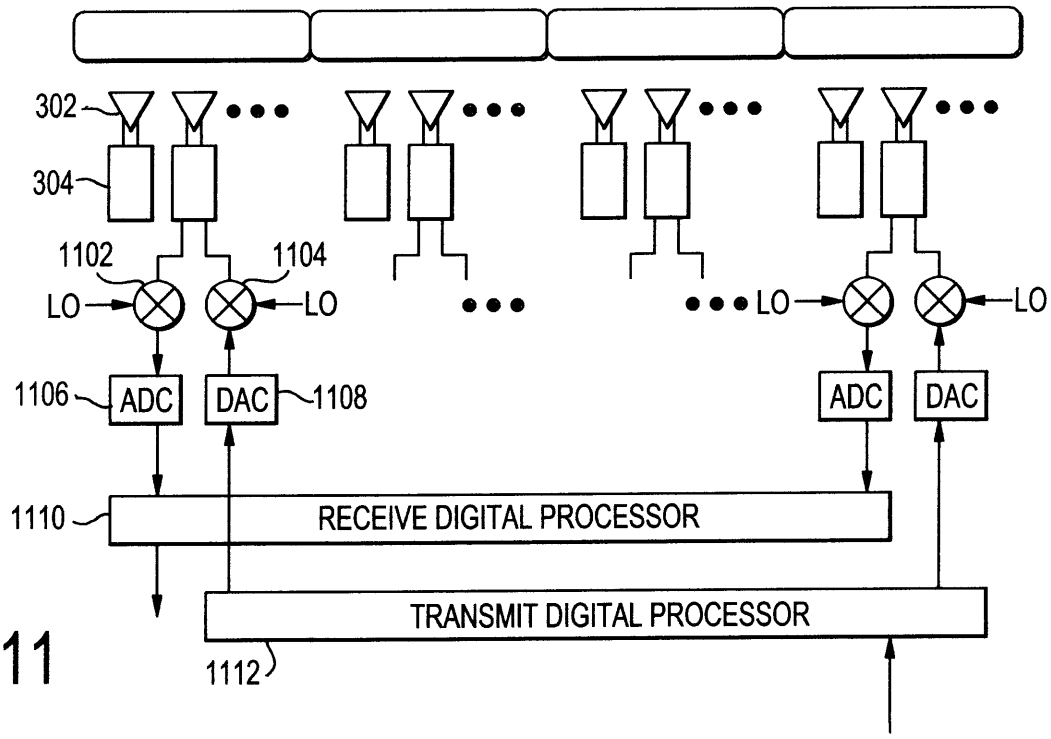

FIG. 11