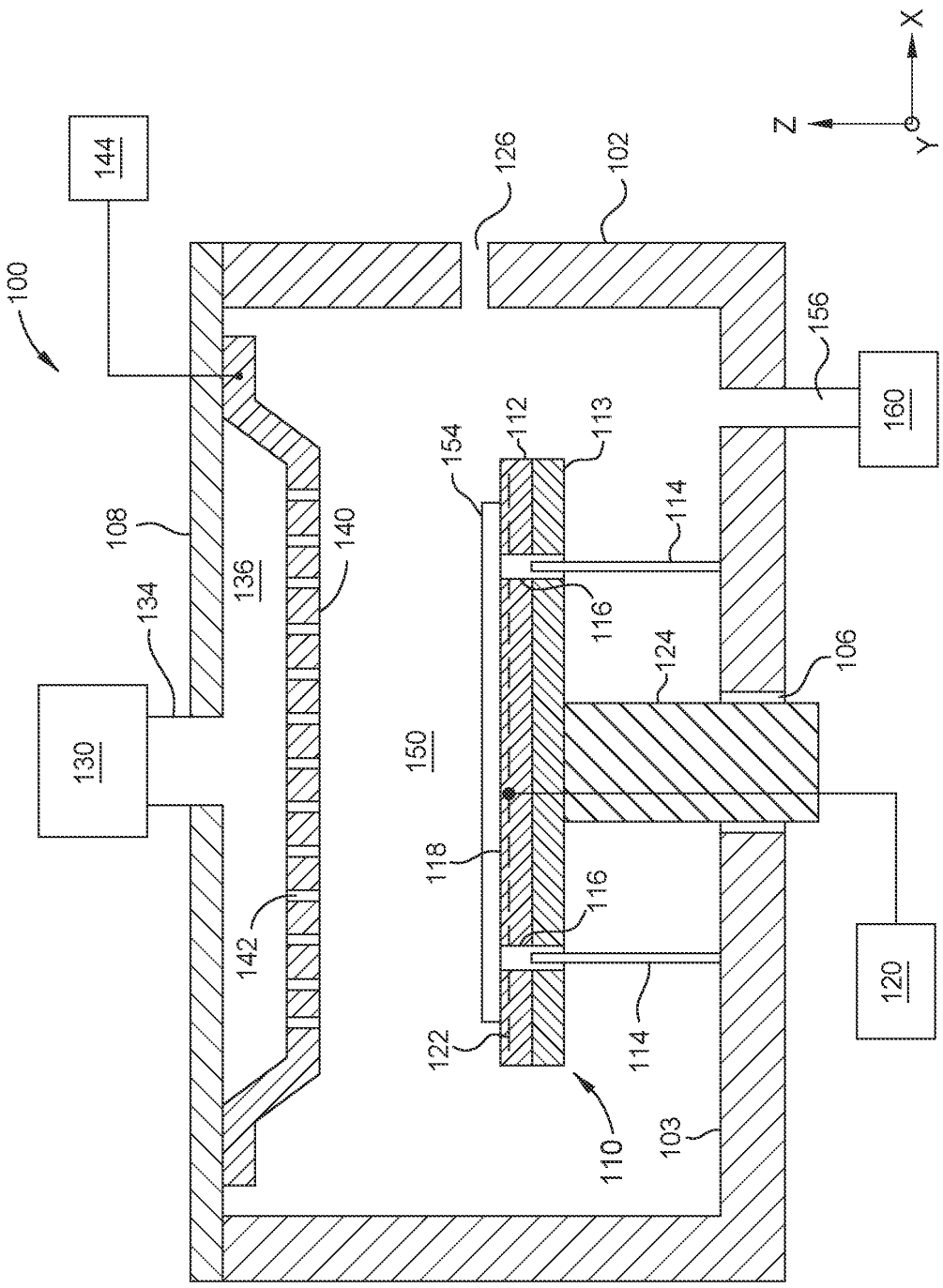
X
Z
Y
100
144
126
102
156
160
154
112
113
114
108
136
140
134
116
124
106
130
150
118
116
142
120
122
114
110
103

FIG. 1

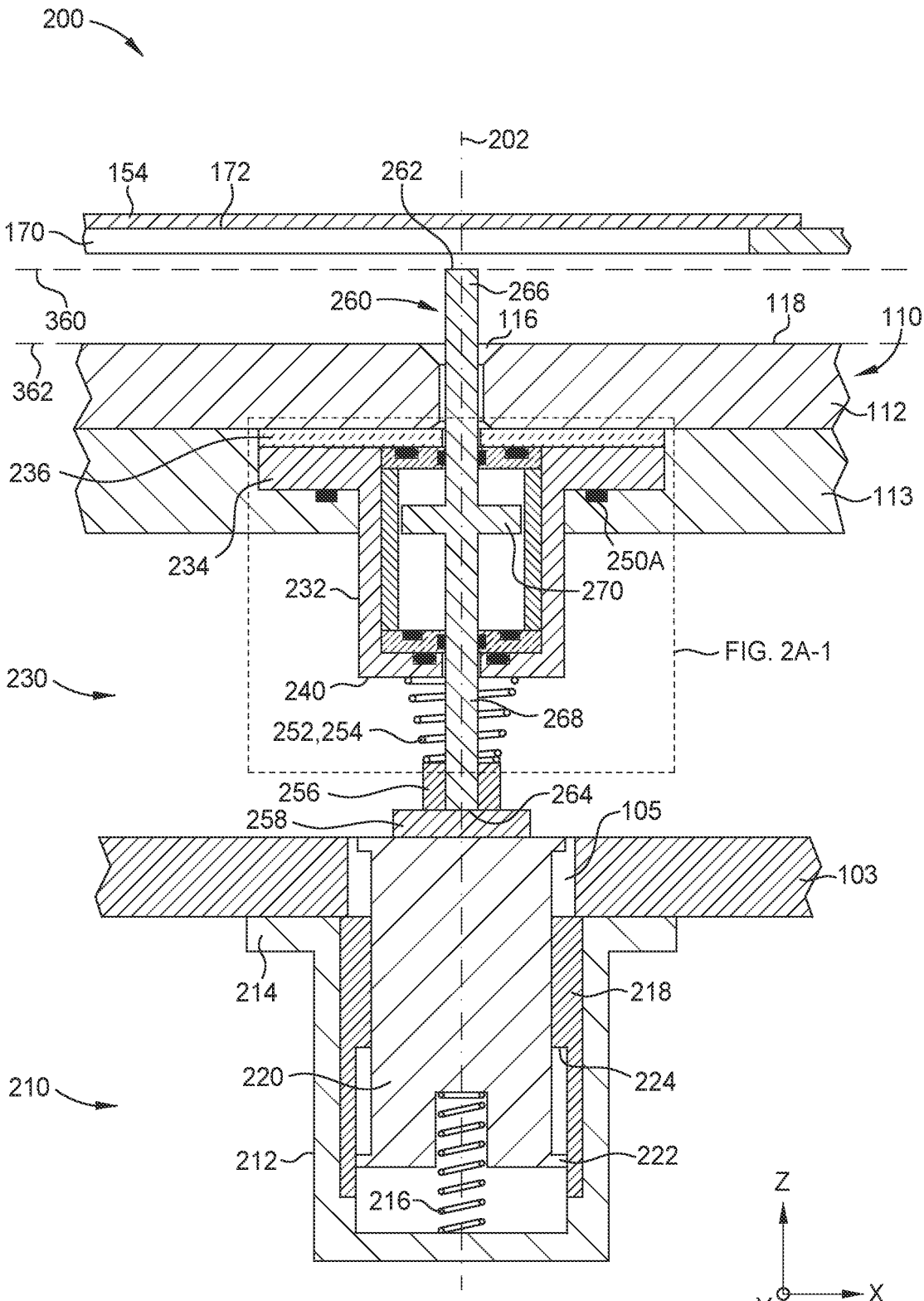
200
202
154
172
262
170
360
260
266
116
118
110
362
112
236
113
234
250A
232
270
FIG. 2A-1
230
240
268
252,254
256
264
258
105
103
214
218
210
220
224
212
222
216
Z
Y
X

FIG. 2A

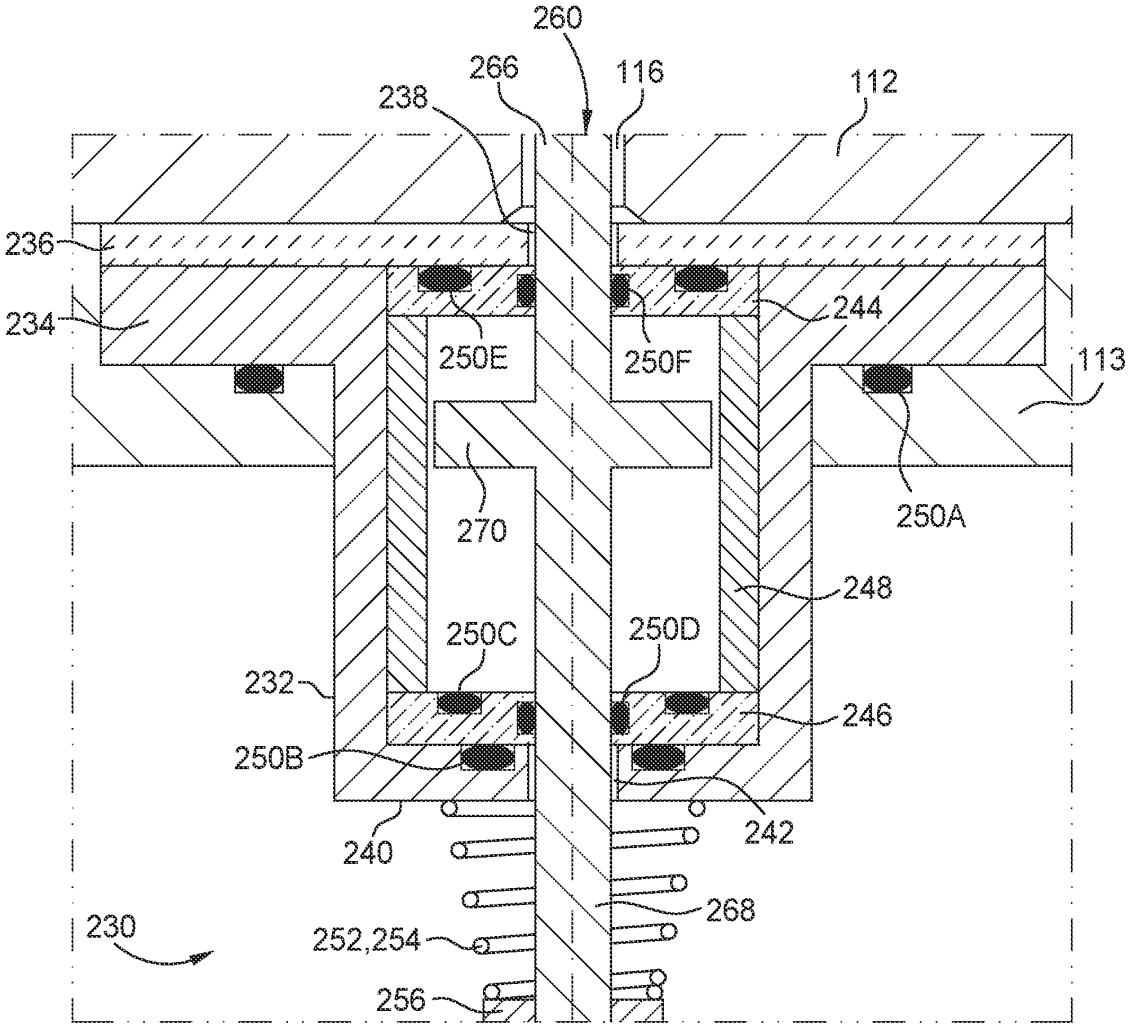
260
266
116
112
238
236
234
244
250E
250F
113
270
250A
248
250C
250D
232
246
250B
242
240
230
268
252,254
256

FIG. 2A-1

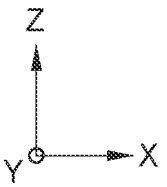
Z
Y
X

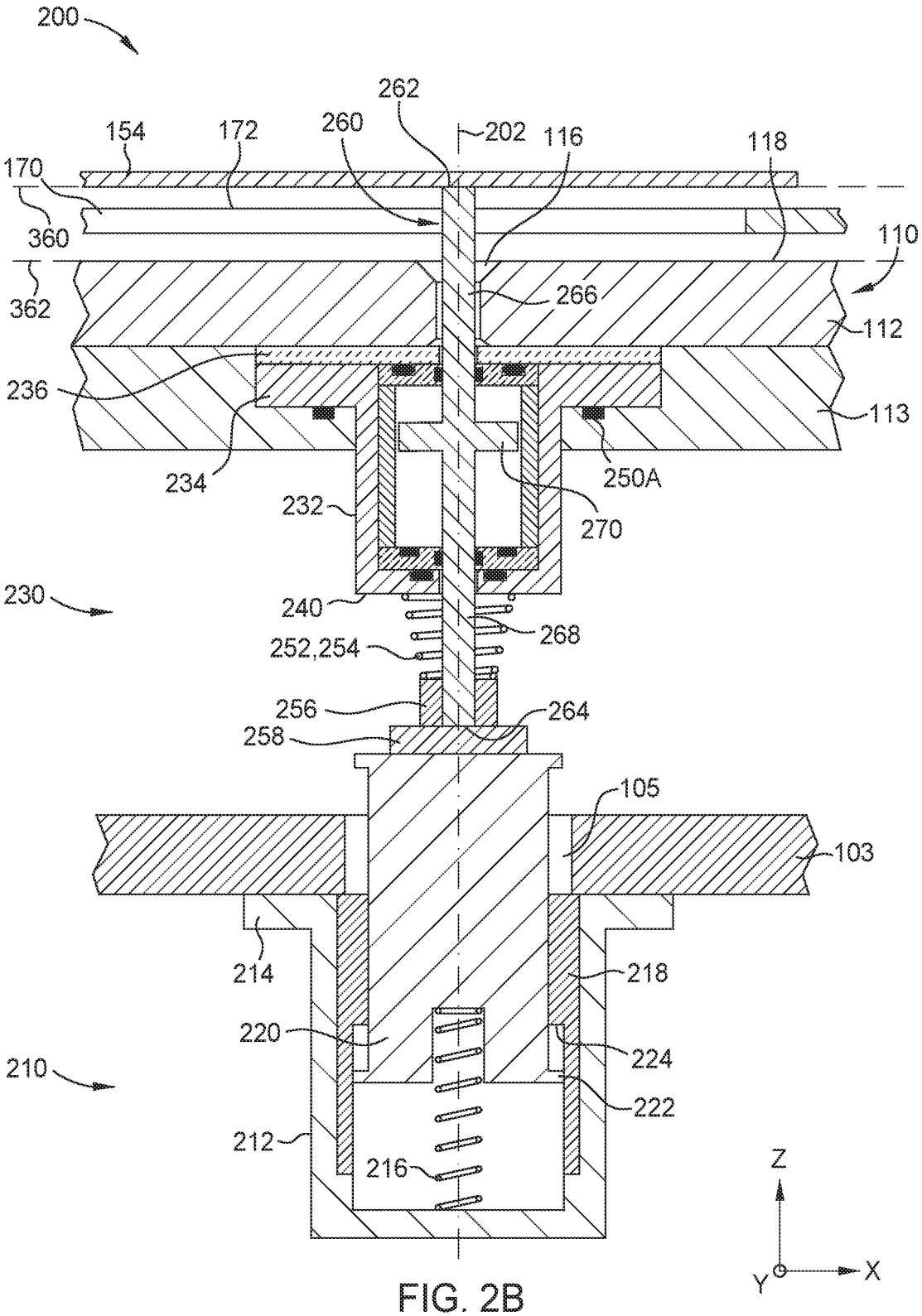
200
262
154
172
260
202
116
118
170
360
110
362
266
112
236
113
234
250A
232
270
230
240
268
252,254
256
264
258
105
103
214
218
220
224
210
222
212
216
Z
Y
X

FIG. 2B

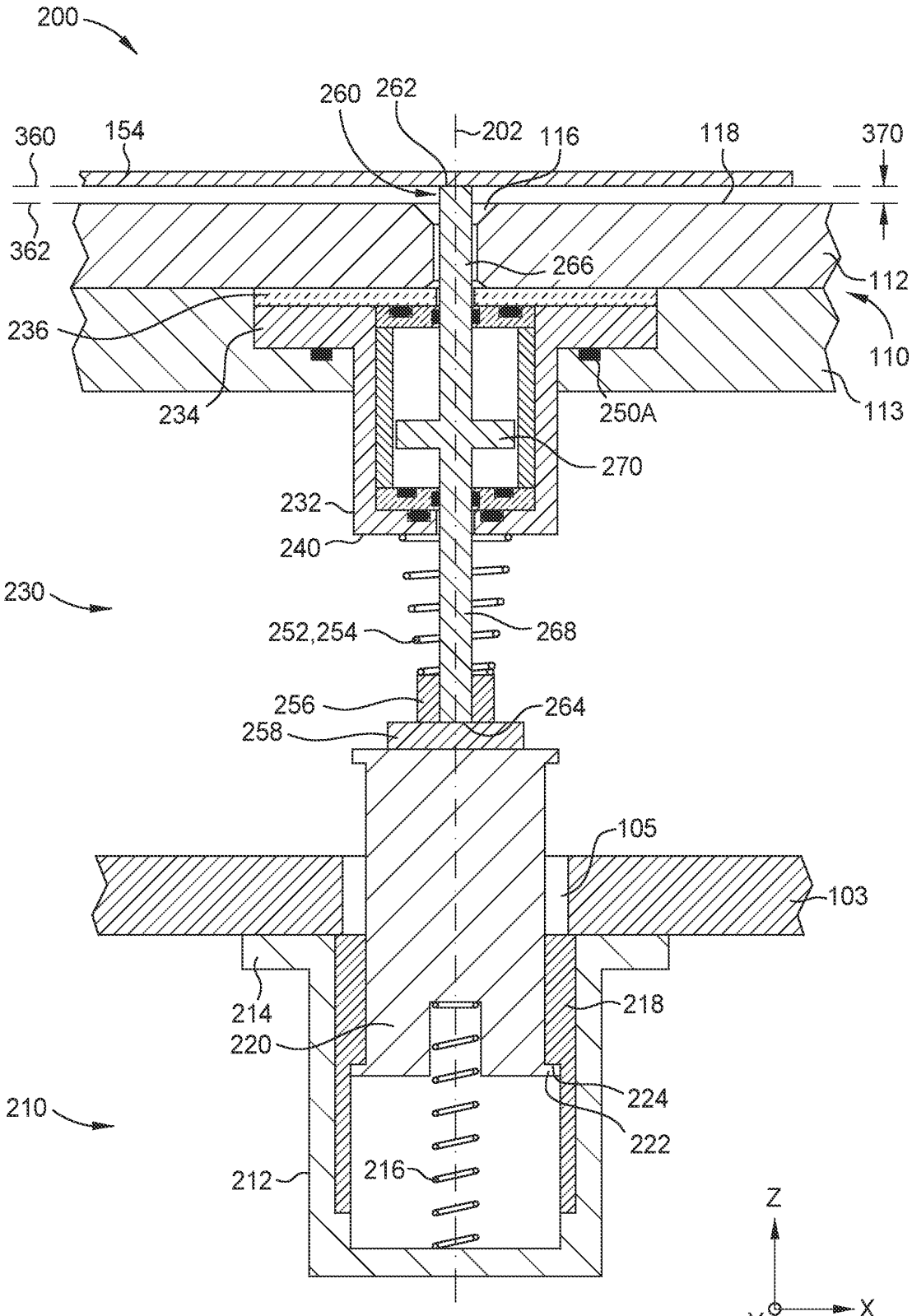
200
260
262
360
154
202
116
118
370
362
266
112
236
110
234
250A
113
270
232
240
230
252,254
268
256
264
258
105
103
214
218
220
224
210
222
212
216
Z
Y
X

FIG. 2C

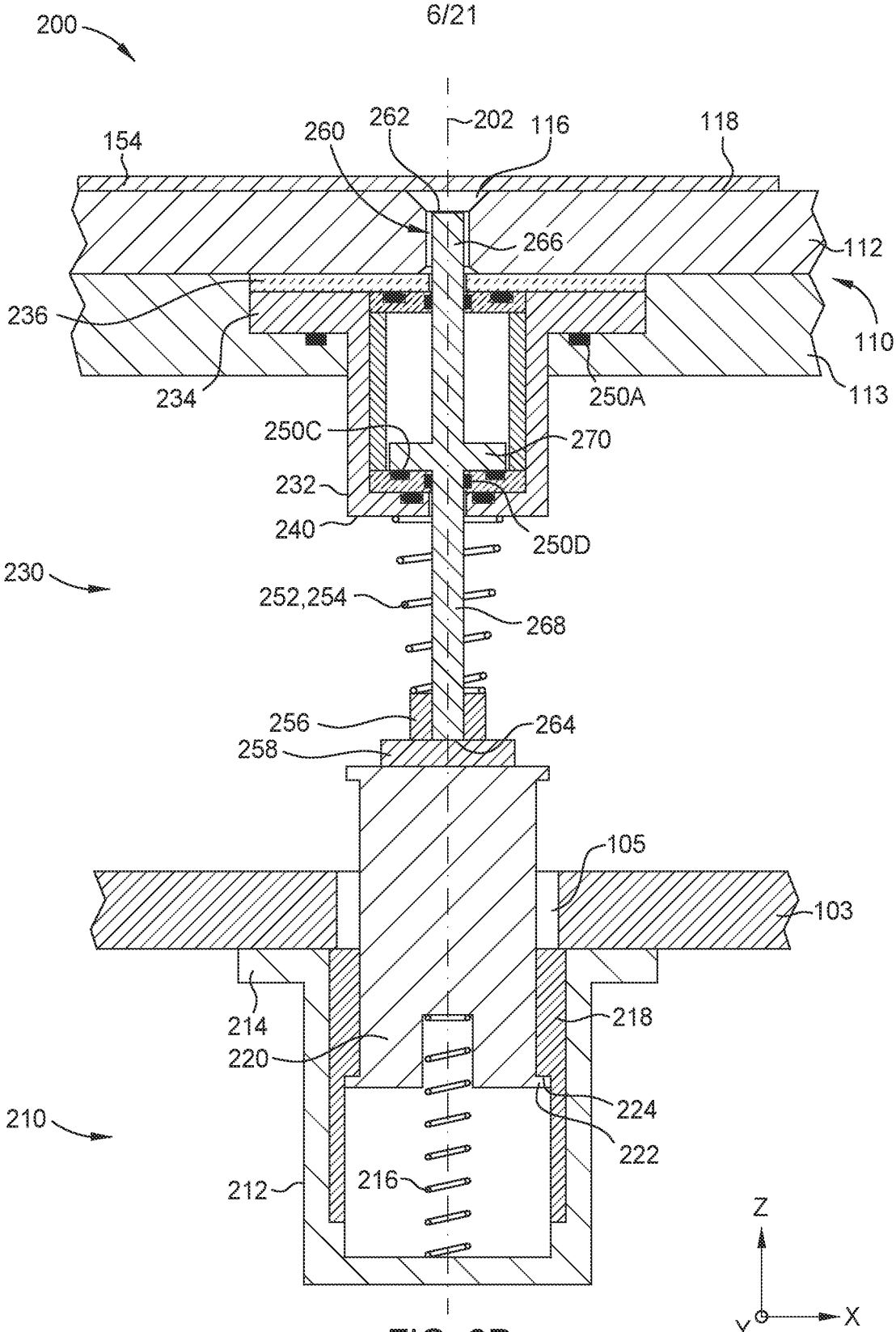
200
154
260
262
202
116
118
266
112
236
110
234
250A
113
250C
270
232
240
250D
230
252,254
268
256
264
258
105
103
214
218
220
224
222
210
212
216
Z
Y
X

FIG. 2D

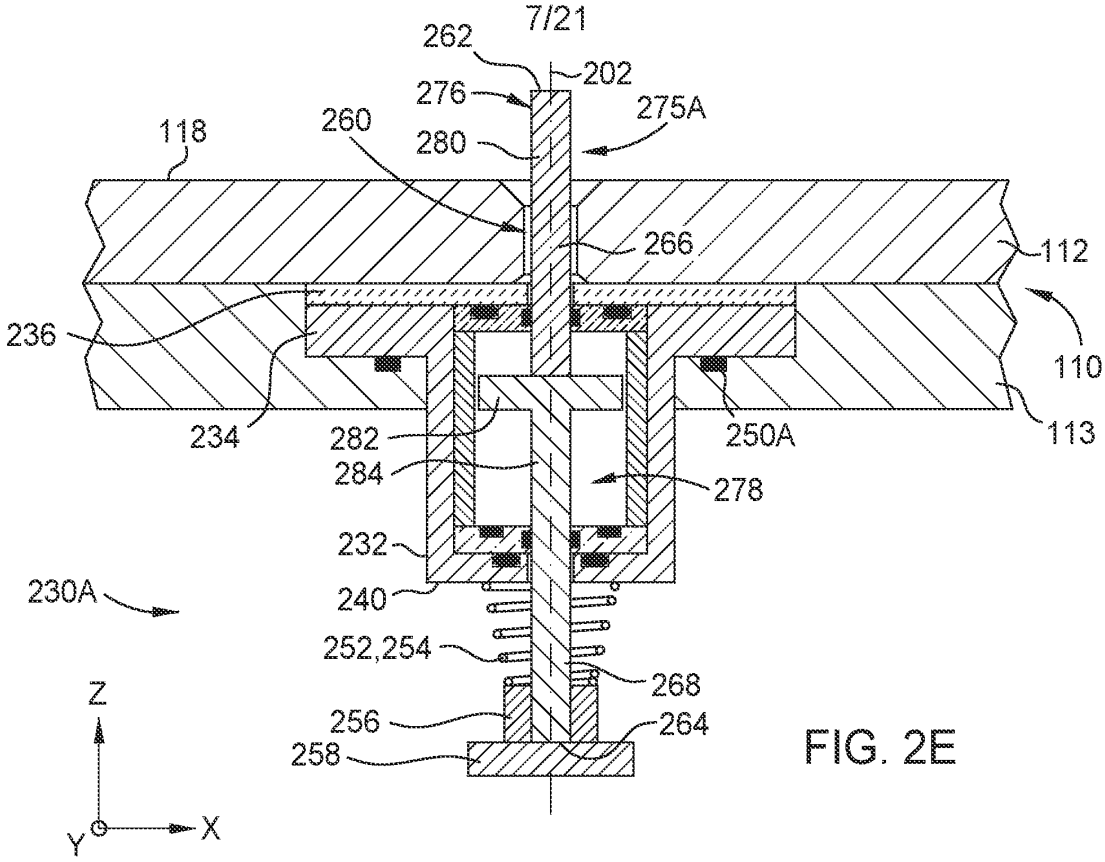
262
202
276
275A
260
280
118
266
112
236
110
234
282
250A
113
284
278
232
230A
240
252,254
268
Z
256
264
258
Y
X

FIG. 2E

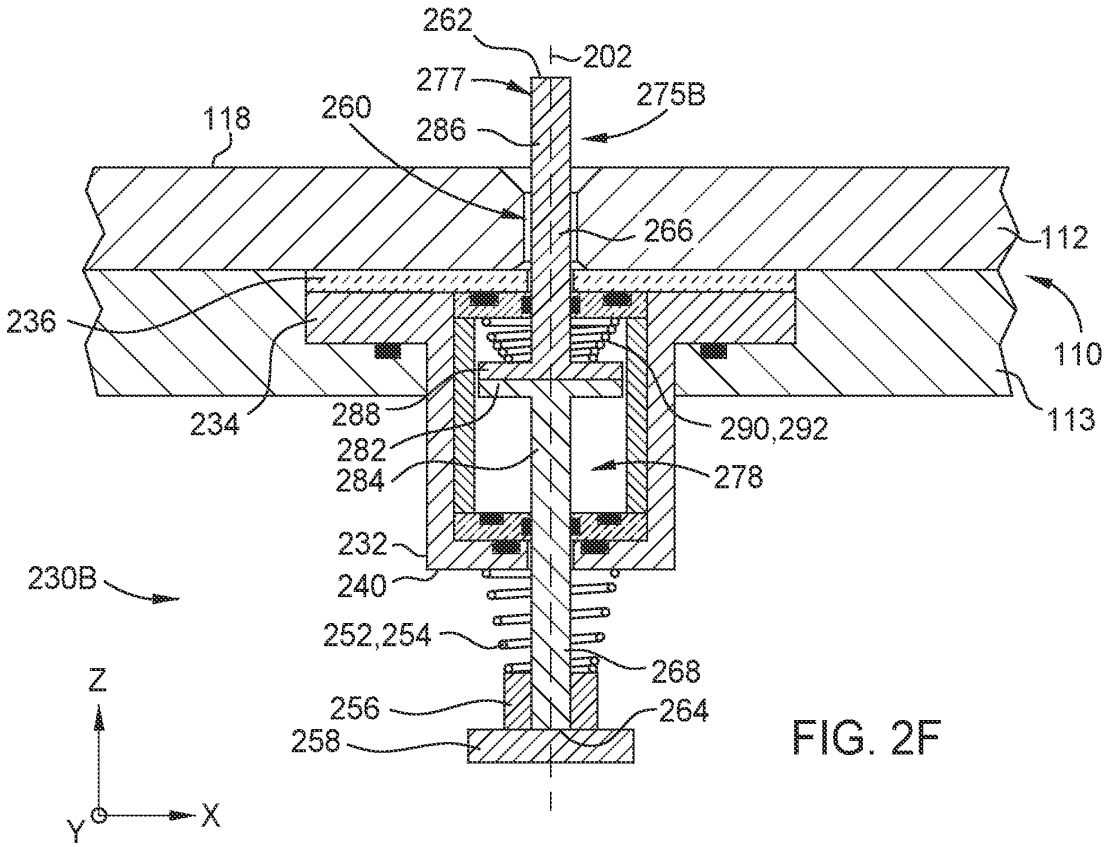
262
202
277
275B
260
286
118
266
112
236
110
234
288
290,292
113
282
284
278
232
230B
240
252,254
268
Z
256
264
258
Y
X

FIG. 2F

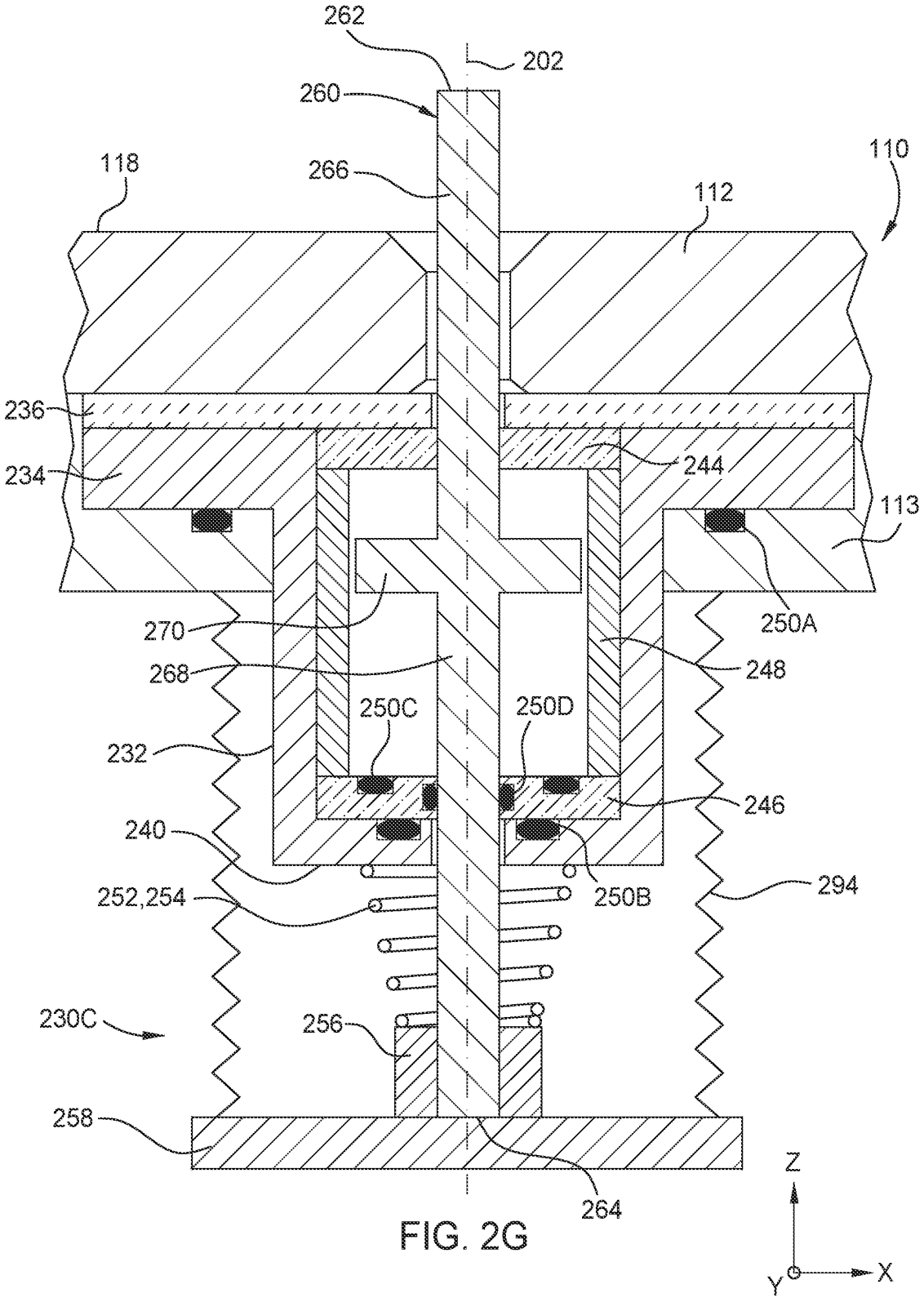
262
202
260
118
266
110
112
236
234
244
113
250A
270
268
248
250C
250D
232
246
240
250B
294
252,254
230C
256
258
264
Z
Y
X

FIG. 2G

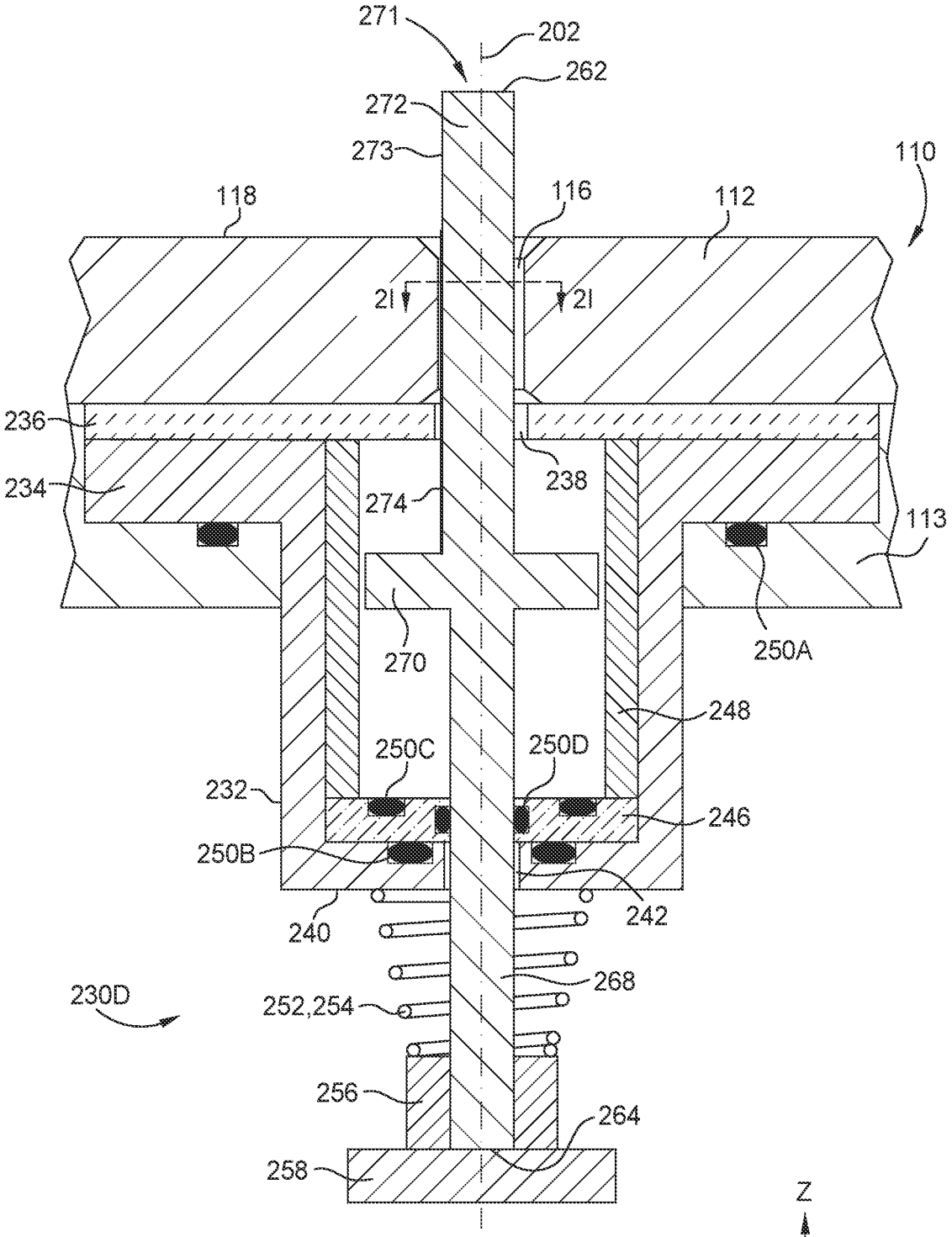
271
202
262
272
273
110
118
116
112
2I
2I
236
234
238
274
113
270
250A
248
250C
250D
232
246
250B
240
242
230D
268
252,254
256
264
258
Z
Y
X

FIG. 2H

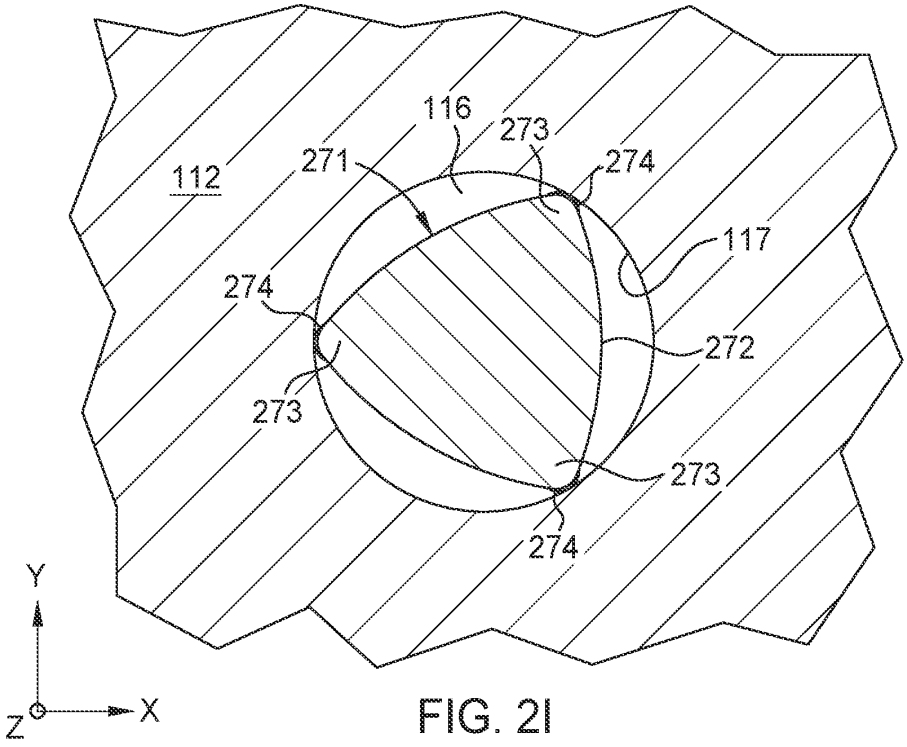

FIG. 2I

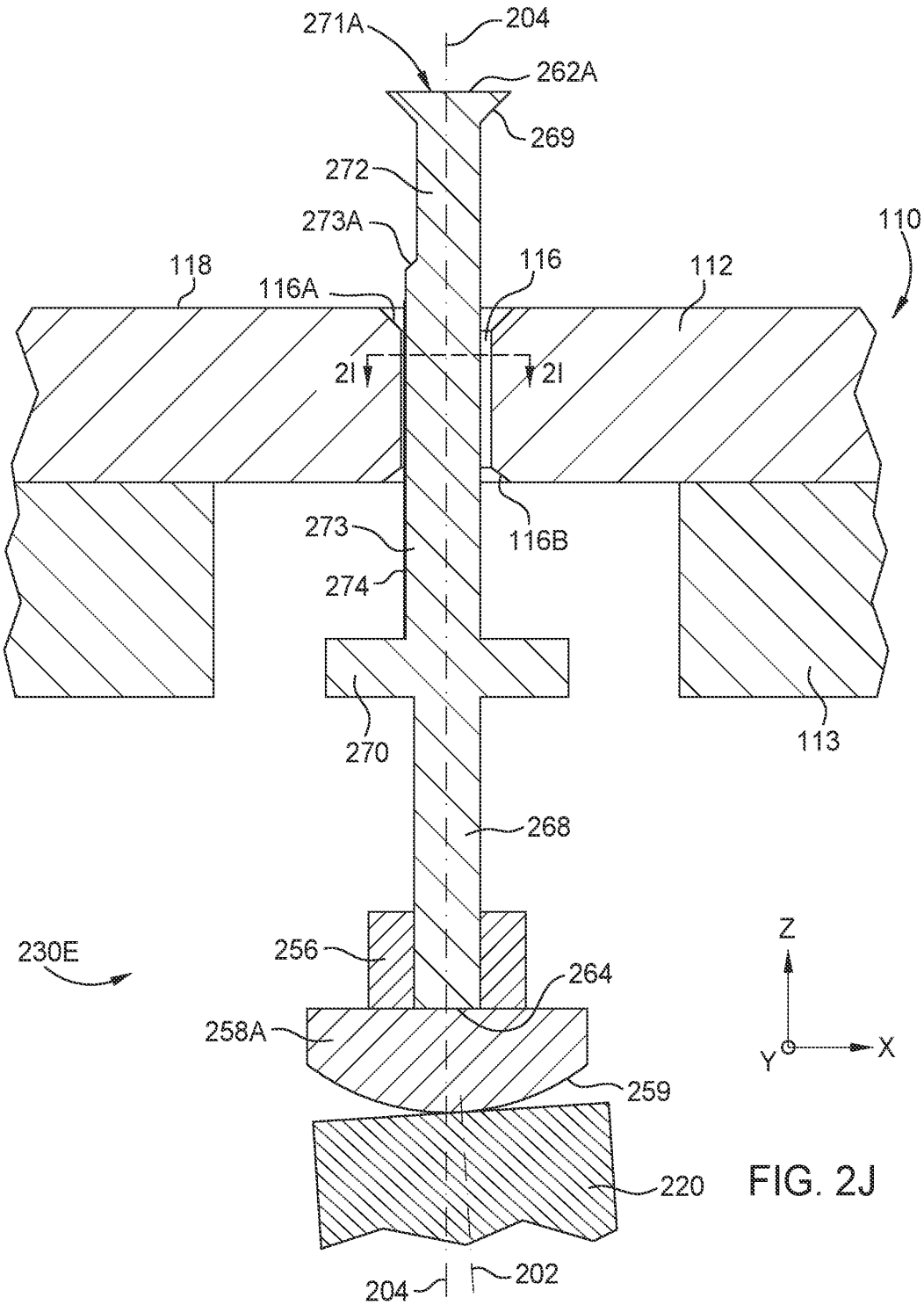
271A
204
262A
269
272
273A
110
118
116
112
116A
2I
2I
116B
273
274
270
113
268
230E
256
264
258A
259
220
204
202
Z
Y
X

FIG. 2J

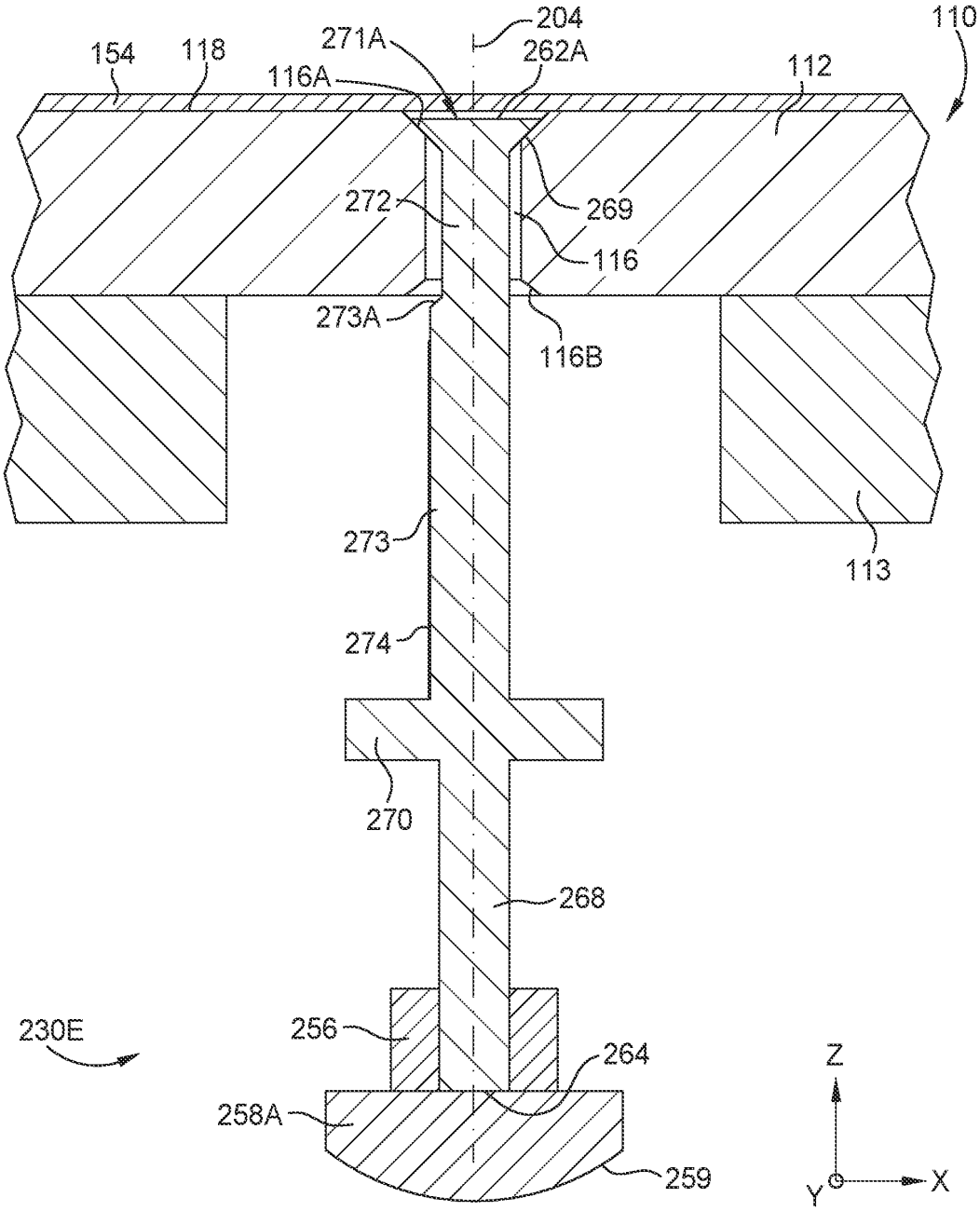
154
118
271A
204
262A
110
116A
112
272
269
116
273A
116B
273
113
274
270
268
230E
256
264
258A
259
Z
Y
X

FIG. 2K

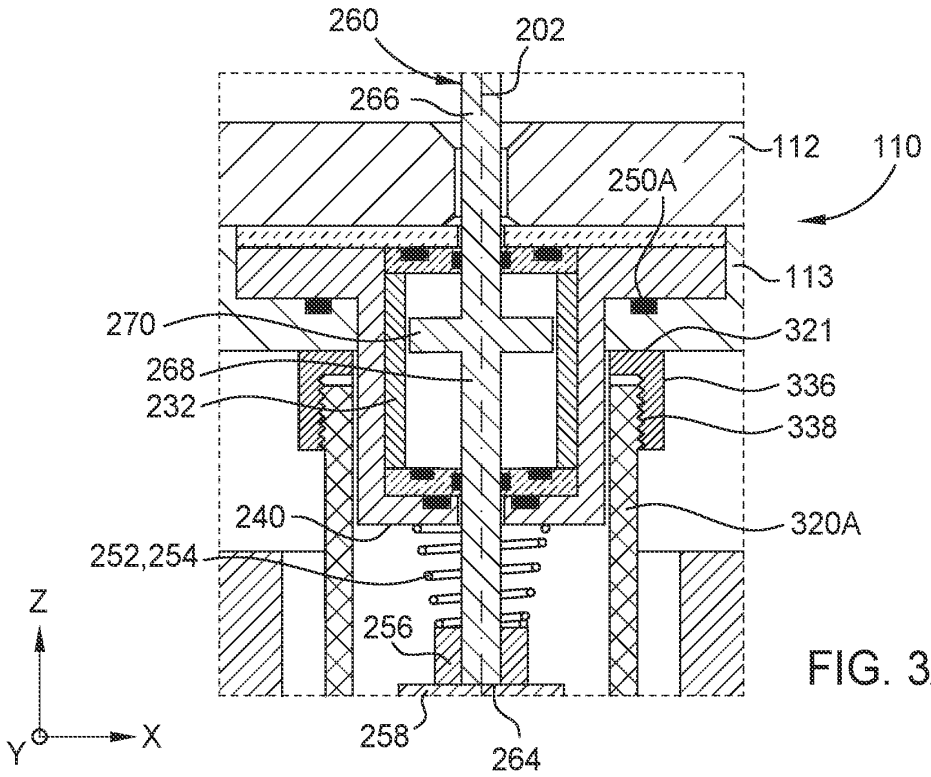
260
202
266
112
110
250A
113
270
321
268
336
232
338
240
320A
252,254
Z
256
Y
X
258
264

FIG. 3A-1

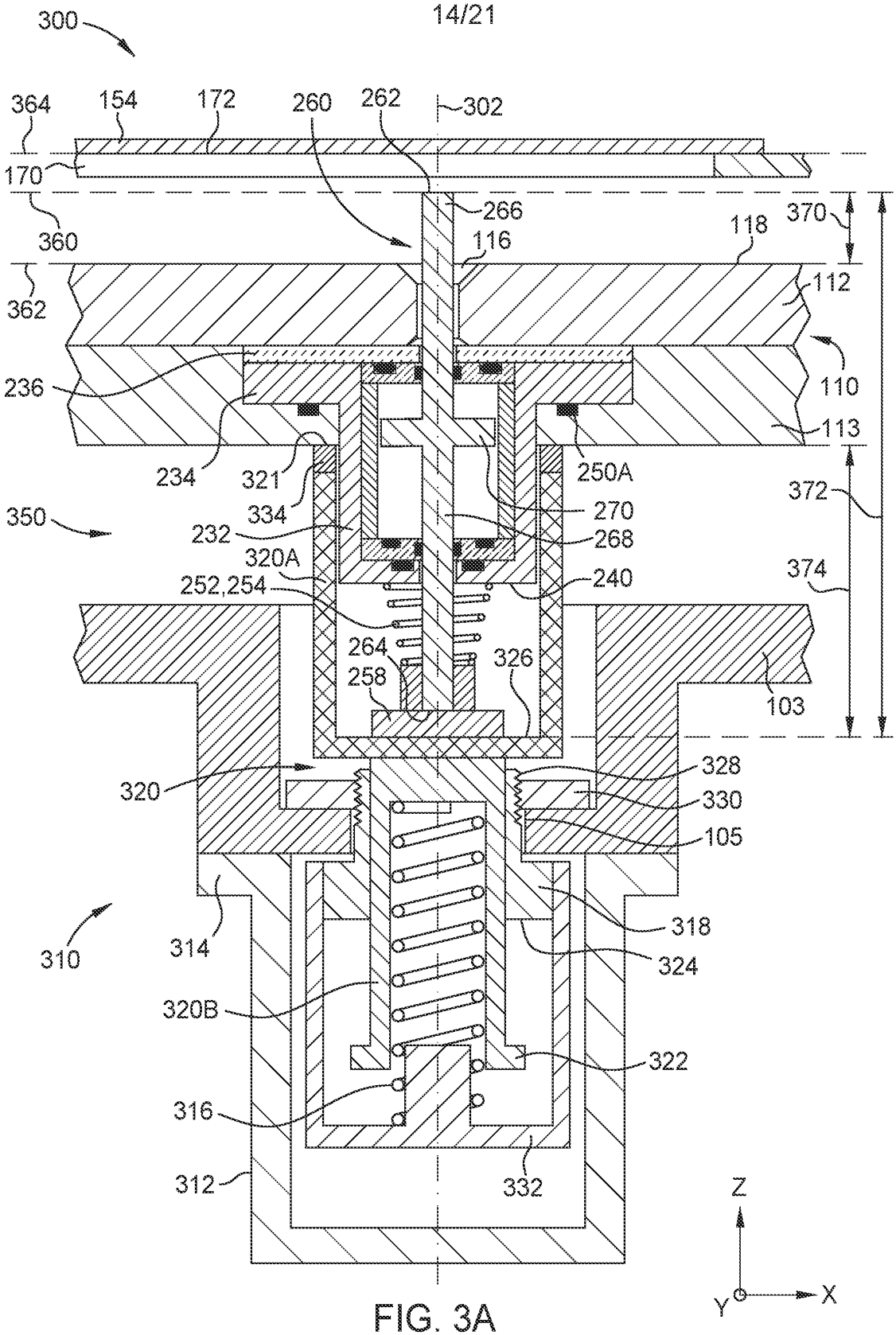
300
364
154
172
260
262
302
170
360
266
116
118
370
362
112
236
110
113
234
321
250A
372
334
270
350
232
268
320A
240
374
252,254
264
258
326
103
320
328
330
105
310
314
318
324
320B
322
316
312
332
Z
Y
X

FIG. 3A

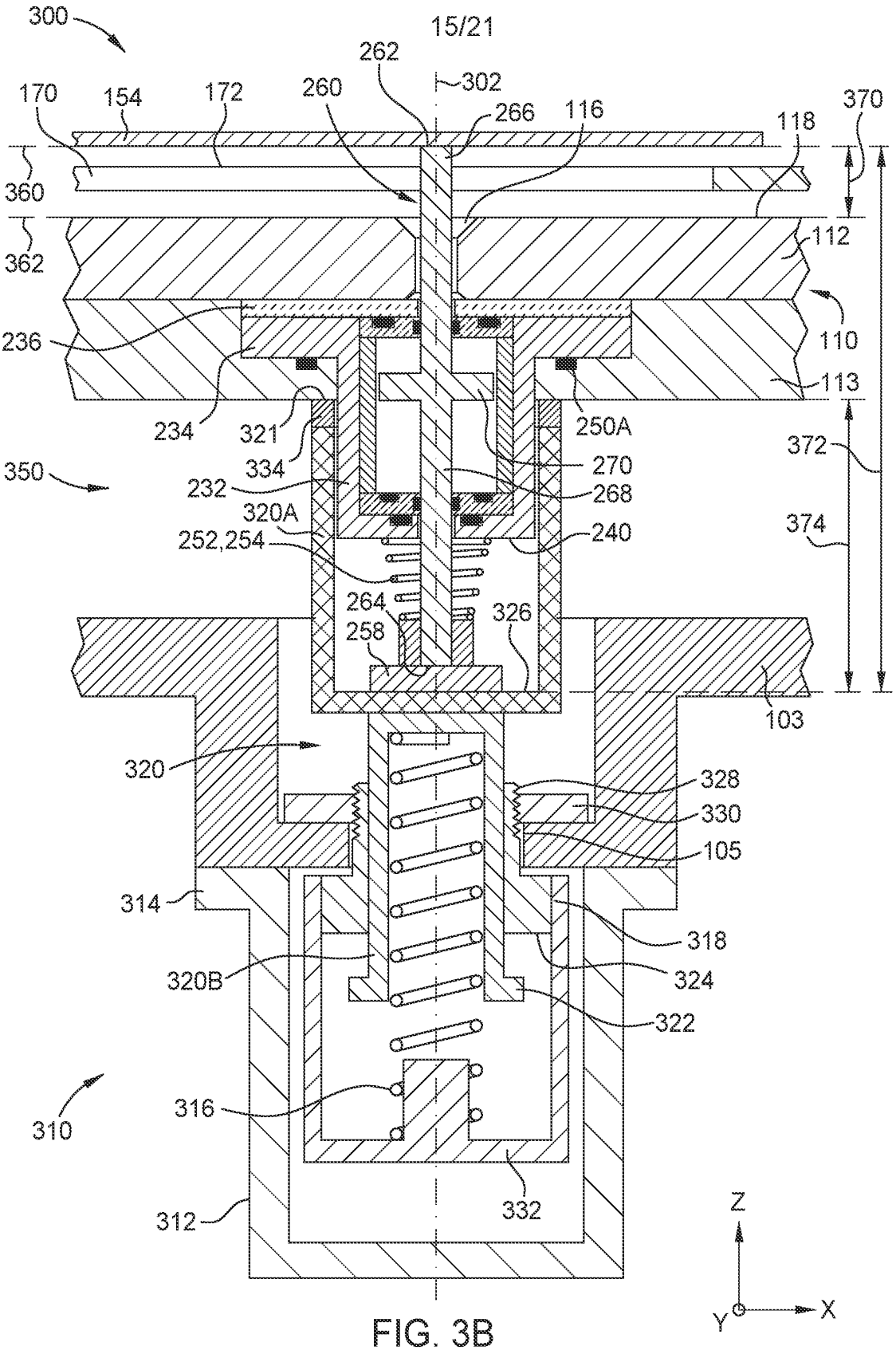
300
262
302
170
154
172
260
266
116
118
370
360
362
112
236
110
113
234
321
250A
372
350
334
270
232
268
320A
374
252,254
240
264
326
258
103
320
328
330
105
314
318
320B
324
322
316
310
332
312
Z
Y
X

FIG. 3B

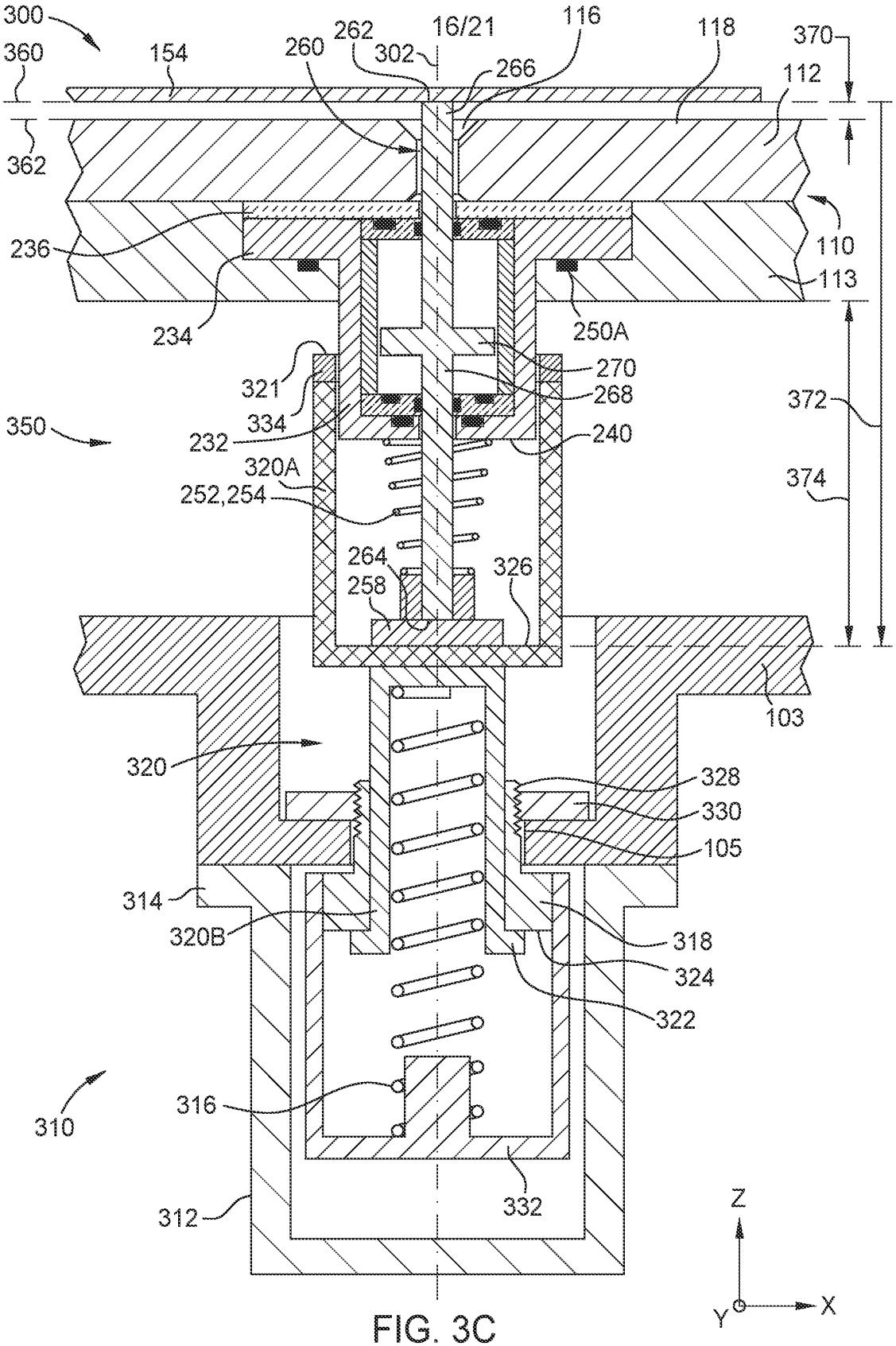
300
360
154
260
262
302
16/21
116
266
118
370
112
362
236
110
113
234
250A
321
270
268
372
334
232
240
350
320A
252,254
374
264
258
326
103
320
328
330
105
314
320B
318
324
322
310
316
332
312
Z
Y
X

FIG. 3C

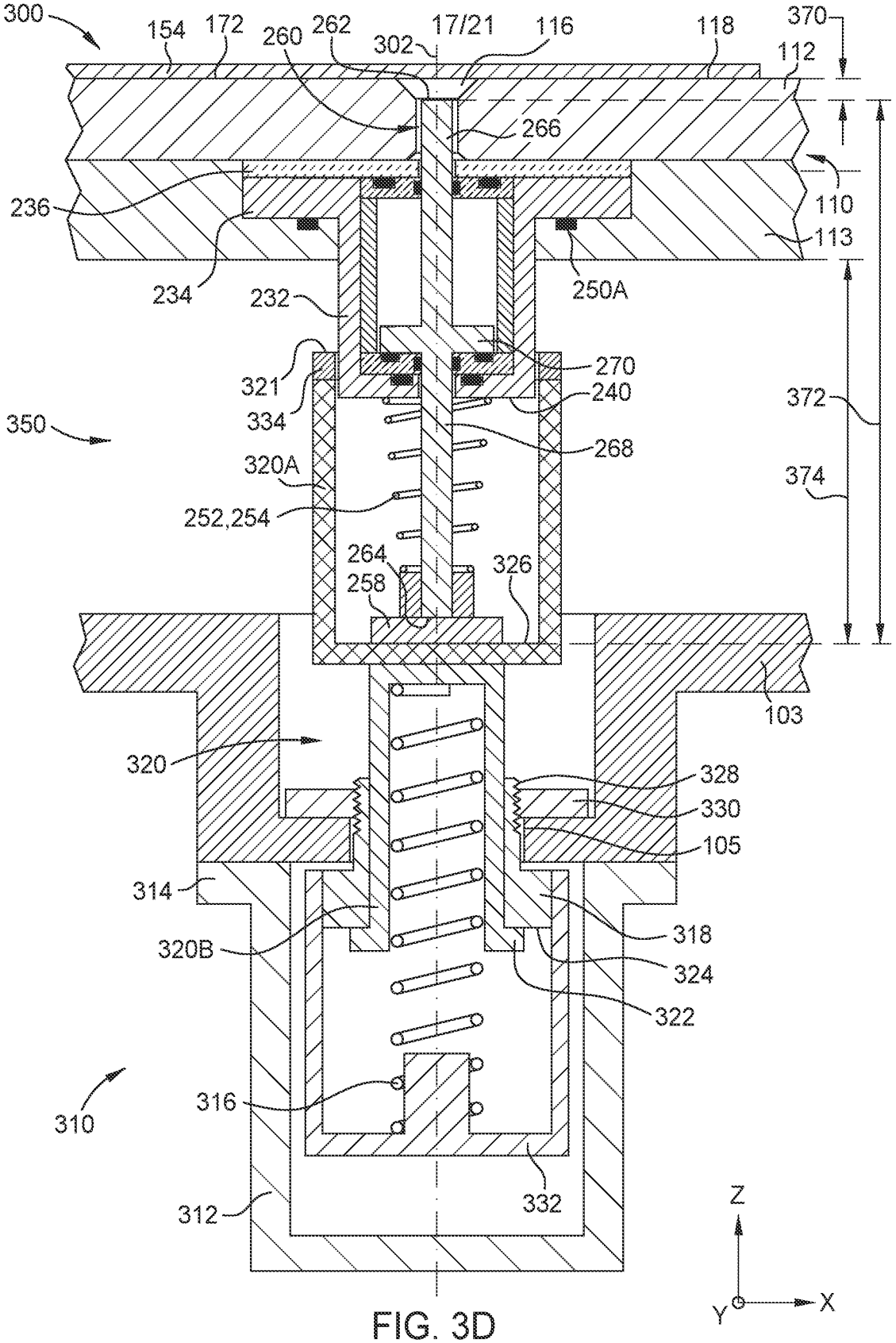
300
154
172
260
262
302
17/21
116
118
370
112
266
110
113
236
234
232
250A
270
321
334
240
372
350
268
320A
374
252,254
264
258
326
103
320
328
330
105
314
318
320B
324
322
316
310
312
332
Z
Y
X

FIG. 3D

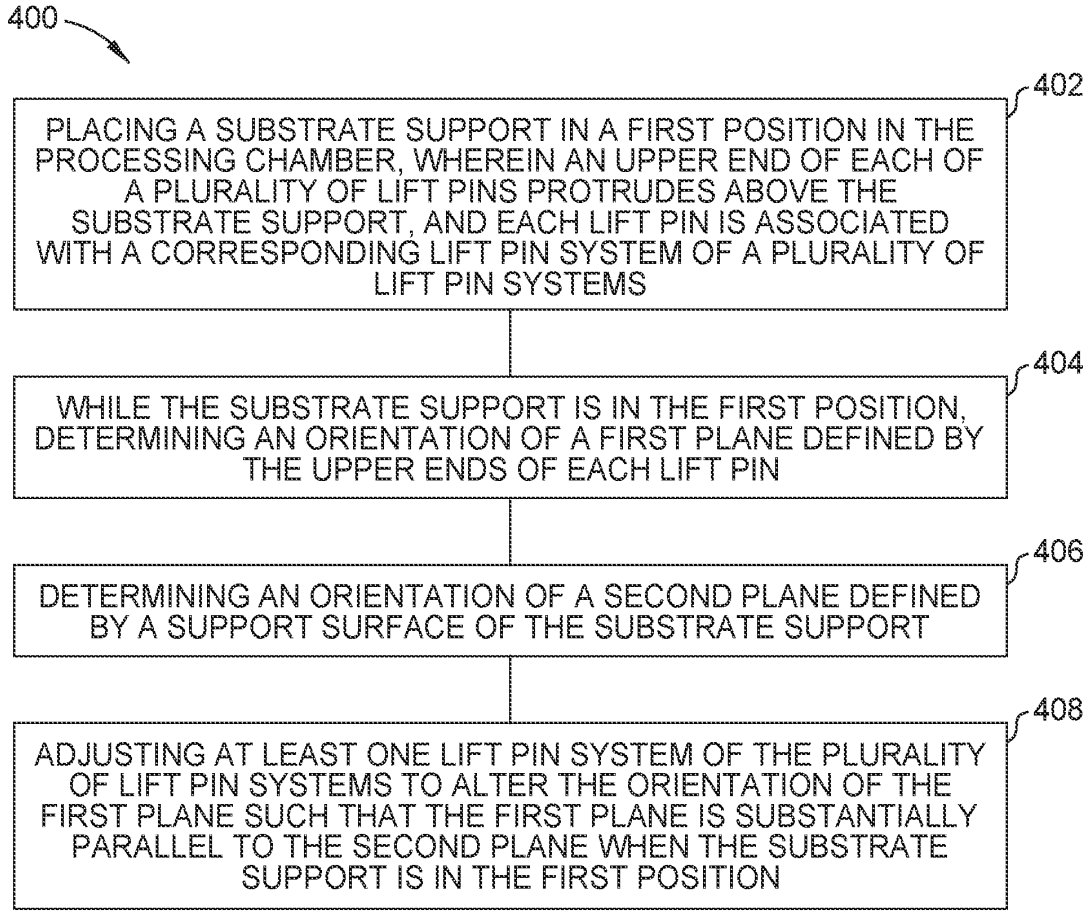
400
402
PLACING A SUBSTRATE SUPPORT IN A FIRST POSITION IN THE PROCESSING CHAMBER, WHEREIN AN UPPER END OF EACH OF A PLURALITY OF LIFT PINS PROTRUDES ABOVE THE SUBSTRATE SUPPORT, AND EACH LIFT PIN IS ASSOCIATED WITH A CORRESPONDING LIFT PIN SYSTEM OF A PLURALITY OF LIFT PIN SYSTEMS
404
WHILE THE SUBSTRATE SUPPORT IS IN THE FIRST POSITION, DETERMINING AN ORIENTATION OF A FIRST PLANE DEFINED BY THE UPPER ENDS OF EACH LIFT PIN
406
DETERMINING AN ORIENTATION OF A SECOND PLANE DEFINED BY A SUPPORT SURFACE OF THE SUBSTRATE SUPPORT
408
ADJUSTING AT LEAST ONE LIFT PIN SYSTEM OF THE PLURALITY OF LIFT PIN SYSTEMS TO ALTER THE ORIENTATION OF THE FIRST PLANE SUCH THAT THE FIRST PLANE IS SUBSTANTIALLY PARALLEL TO THE SECOND PLANE WHEN THE SUBSTRATE SUPPORT IS IN THE FIRST POSITION

FIG. 4A

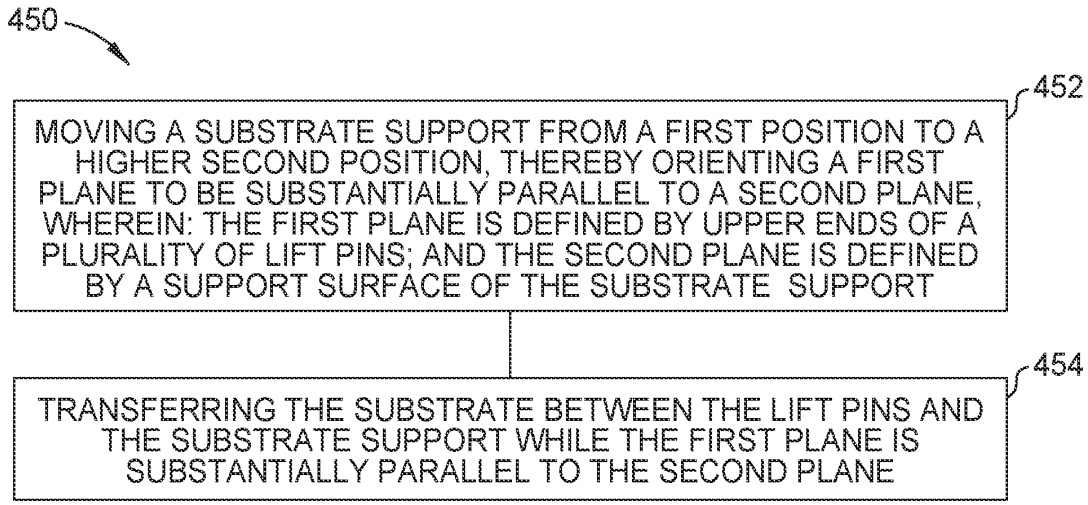
450
452
MOVING A SUBSTRATE SUPPORT FROM A FIRST POSITION TO A HIGHER SECOND POSITION, THEREBY ORIENTING A FIRST PLANE TO BE SUBSTANTIALLY PARALLEL TO A SECOND PLANE, WHEREIN: THE FIRST PLANE IS DEFINED BY UPPER ENDS OF A PLURALITY OF LIFT PINS; AND THE SECOND PLANE IS DEFINED BY A SUPPORT SURFACE OF THE SUBSTRATE SUPPORT
454
TRANSFERRING THE SUBSTRATE BETWEEN THE LIFT PINS AND THE SUBSTRATE SUPPORT WHILE THE FIRST PLANE IS SUBSTANTIALLY PARALLEL TO THE SECOND PLANE

FIG. 4B

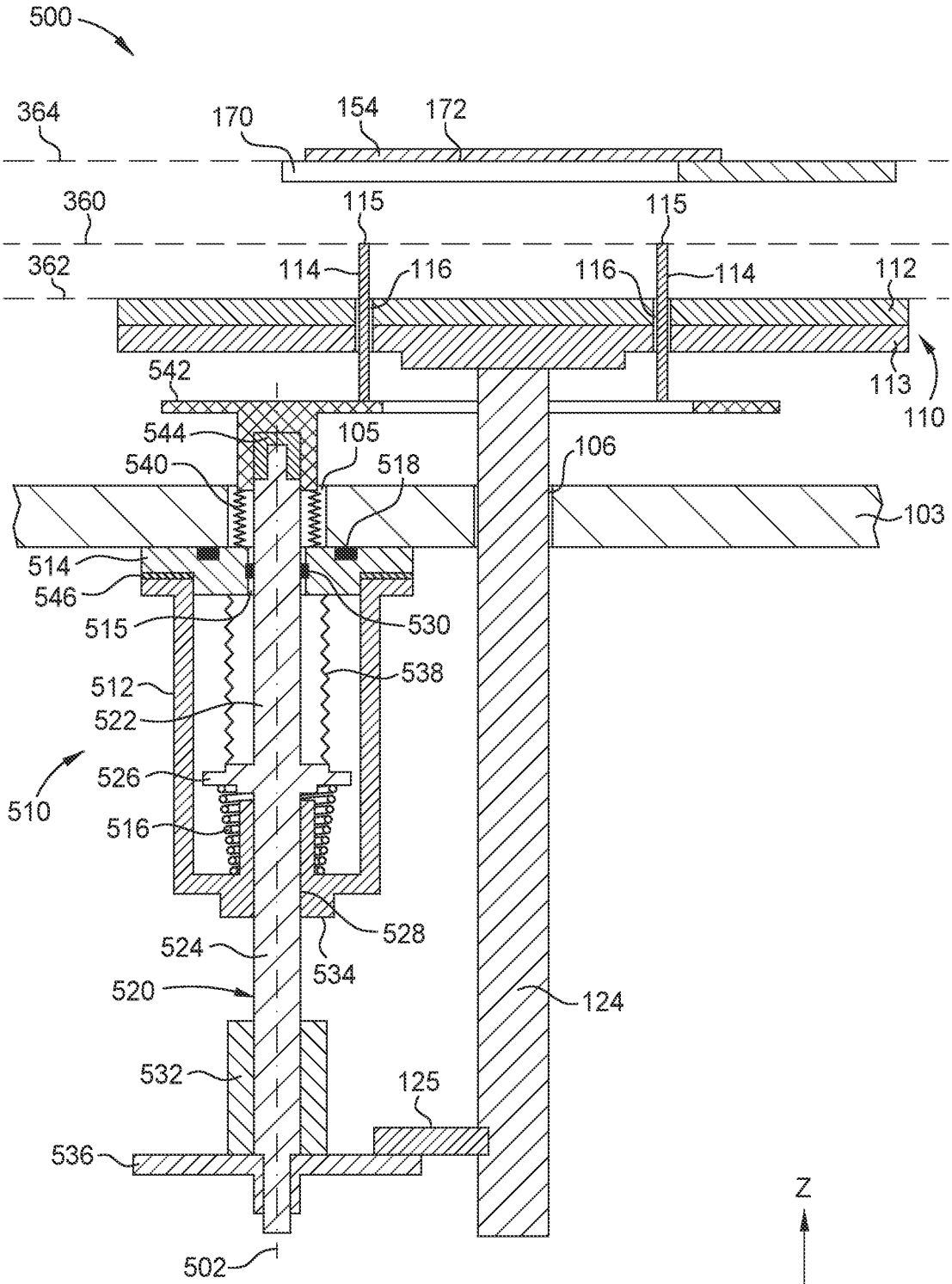
500
364
170
154
172
360
115
115
362
114
116
116
114
112
542
113
110
544
105
106
540
518
103
514
546
515
530
512
538
522
526
510
516
528
524
534
520
124
532
125
536
502
Z
Y
X

FIG. 5A

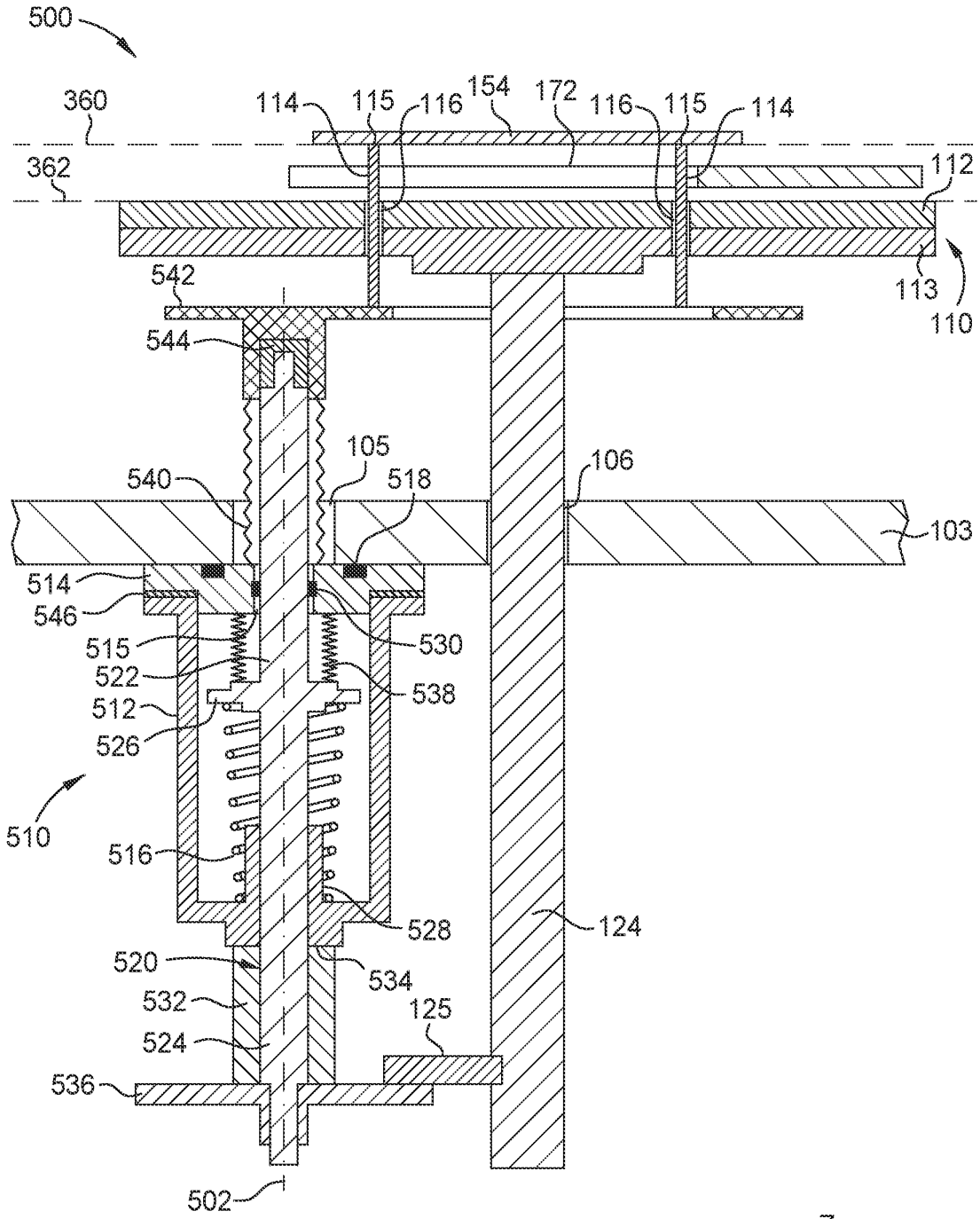
500
360
362
114
115
116
154
172
116
115
114
112
113
110
542
544
105
106
540
518
103
514
546
515
522
512
526
530
538
510
516
528
124
520
534
532
125
524
536
502

FIG. 5B

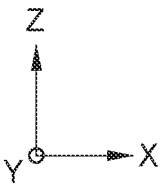
Z
Y
X

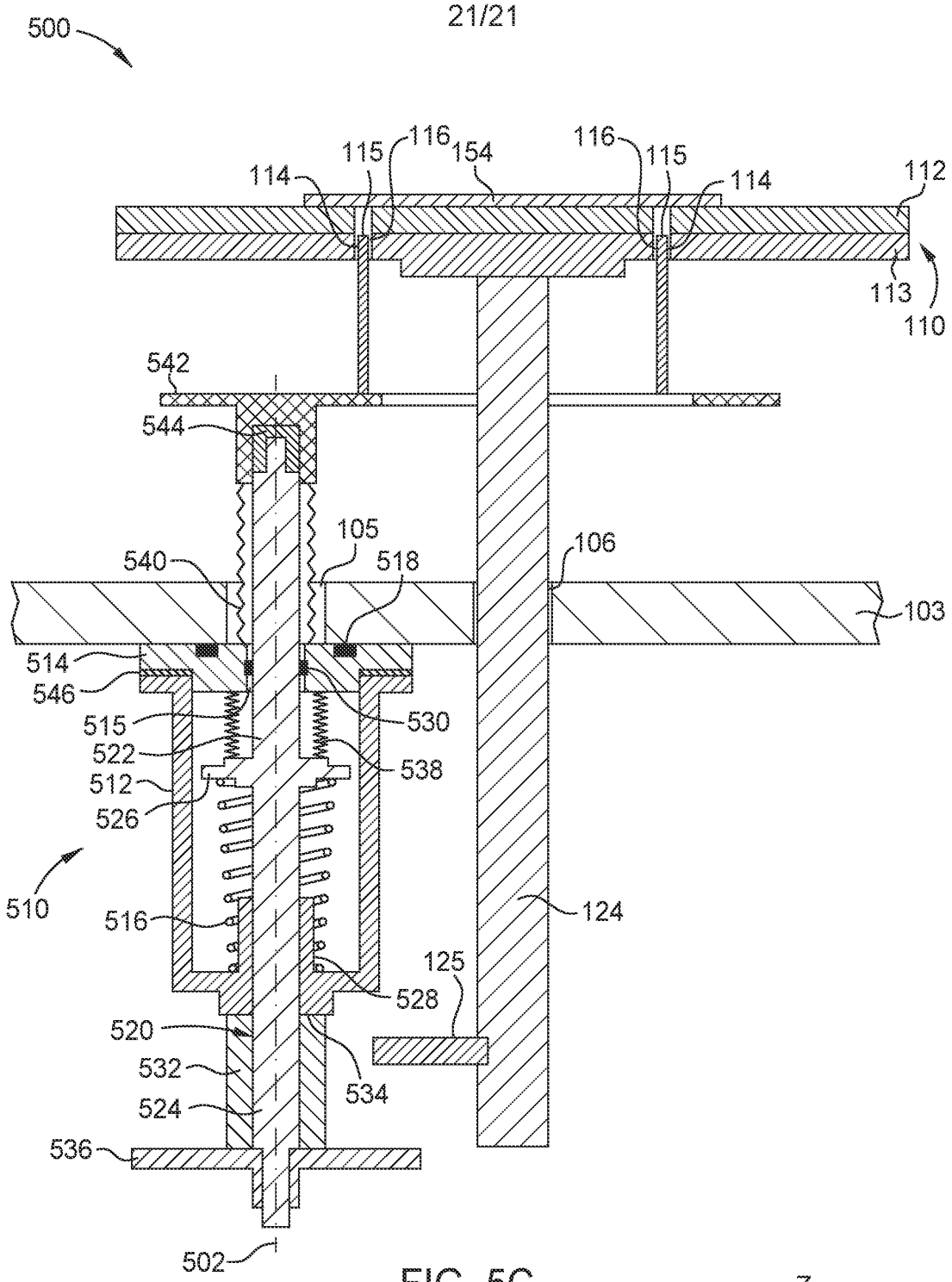
500
115
116
154
116
115
114
114
112
113
110
542
544
105
106
540
518
103
514
546
515
530
522
538
512
526
510
516
124
125
528
520
532
534
524
536
502
Z
Y
X

FIG. 5C