FIG.1

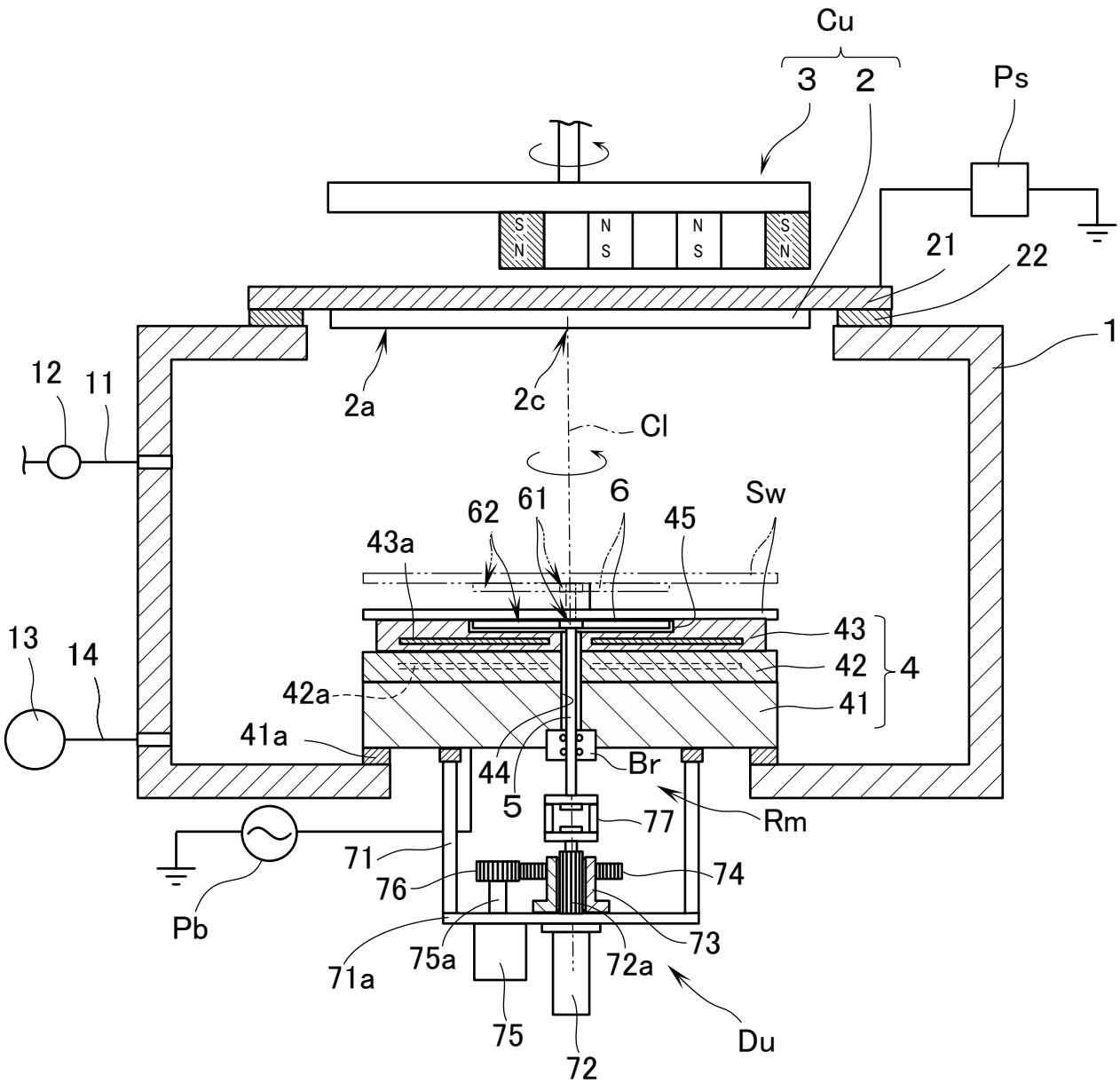
Cu
3
2
Ps
S
N
N
S
N
S
S
N
21
22
1
12
11
2a
2c
Cl
62
61
6
45
Sw
43a
43
42
4
41
42a
41a
13
14
44
5
Br
77
Rm
71
76
74
Pb
73
71a
75a
72a
75
72
Du

FIG.2

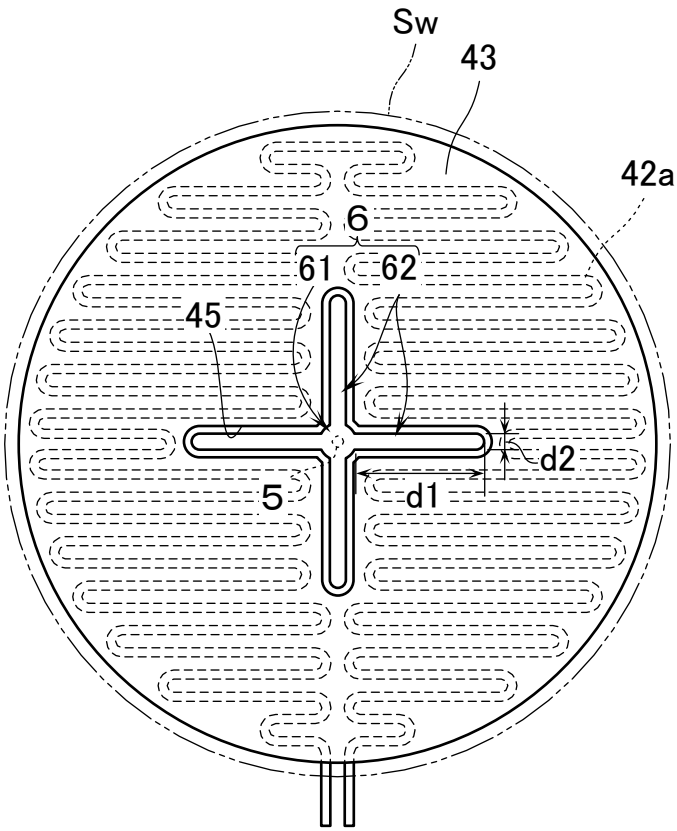

FIG.3

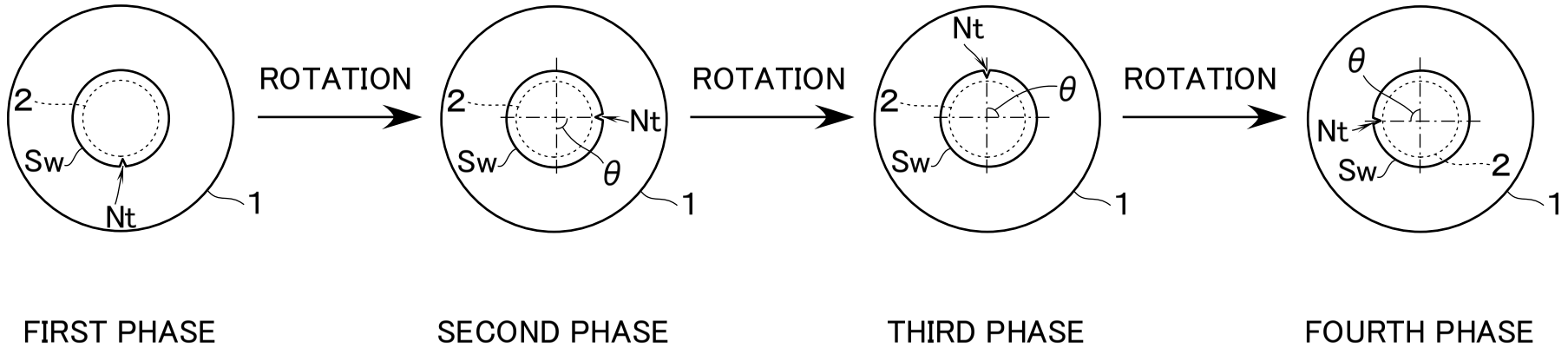
2
Sw
Nt
1
ROTATION
2
Sw
Nt
θ
1
ROTATION
Nt
θ
2
Sw
1
ROTATION
θ
Nt
Sw
2
1
FIRST PHASE
SECOND PHASE
THIRD PHASE
FOURTH PHASE
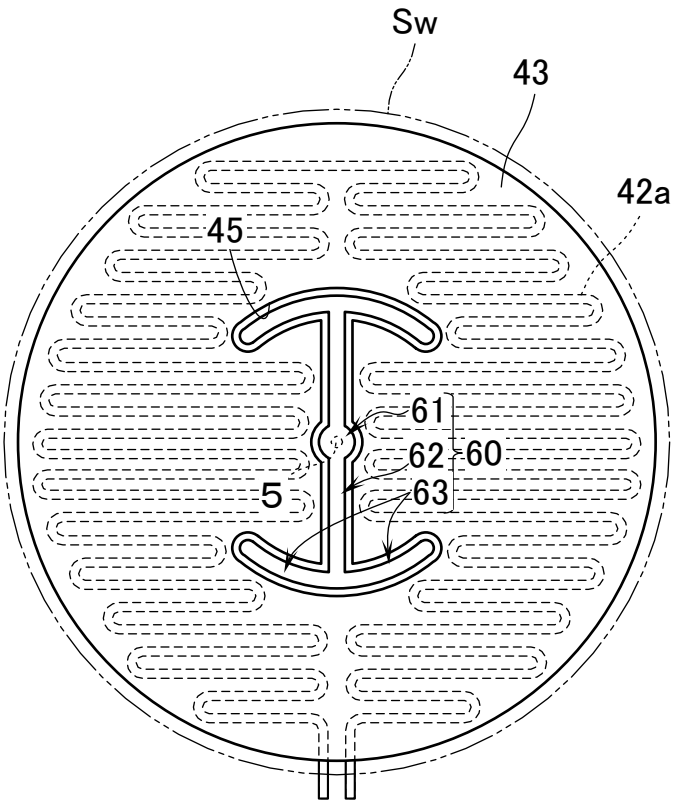
FIG.4