FIG. 1

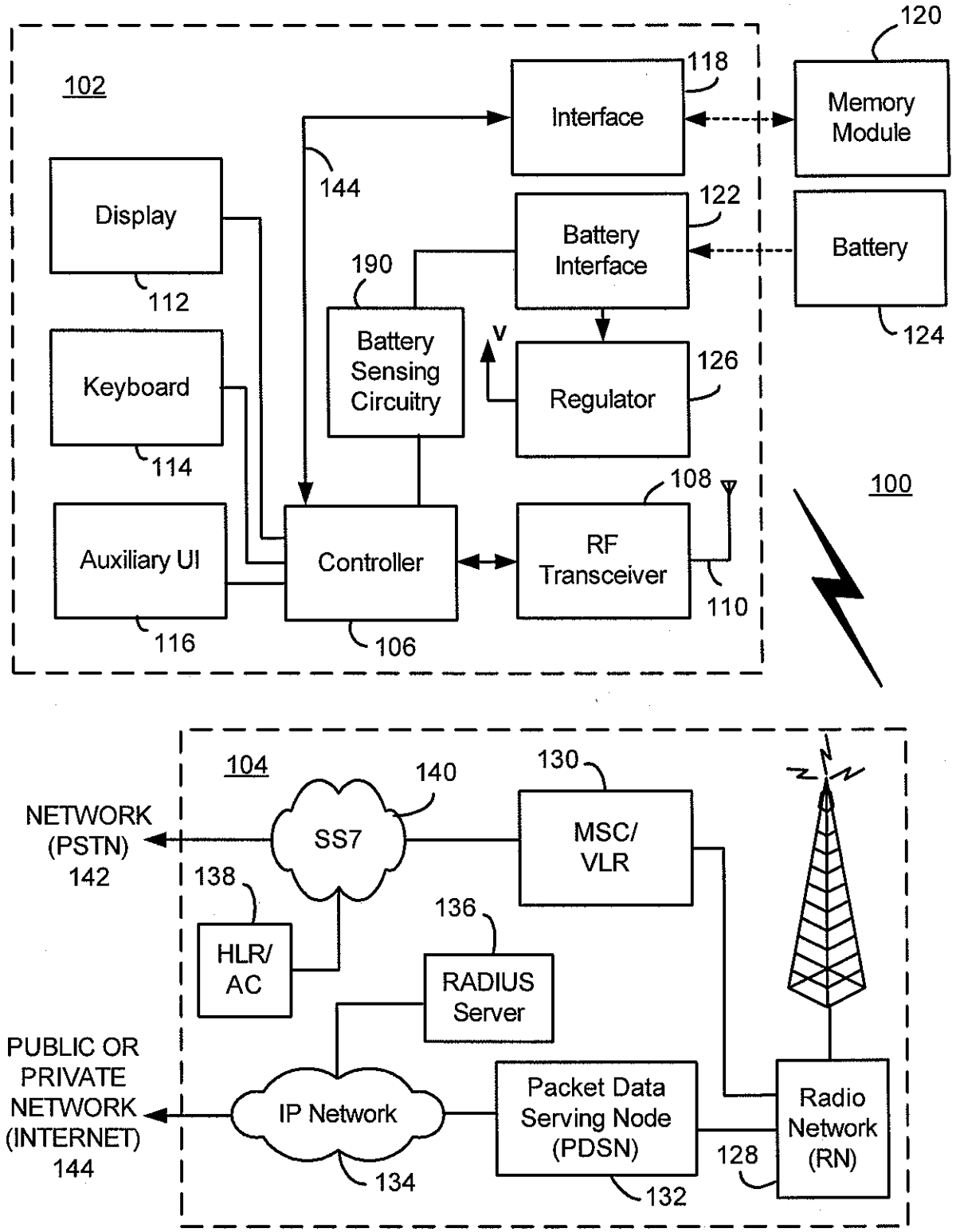
102
120
118
Interface
Memory Module
144
Display
122
Battery Interface
Battery
190
112
Battery Sensing Circuitry
V
124
Keyboard
126
Regulator
114
108
100
Auxiliary UI
Controller
RF Transceiver
110
116
106
104
140
130
NETWORK (PSTN) 142
SS7
MSC/ VLR
138
136
HLR/ AC
RADIUS Server
PUBLIC OR PRIVATE NETWORK (INTERNET) 144
IP Network
Packet Data Serving Node (PDSN)
Radio Network (RN)
128
134
132

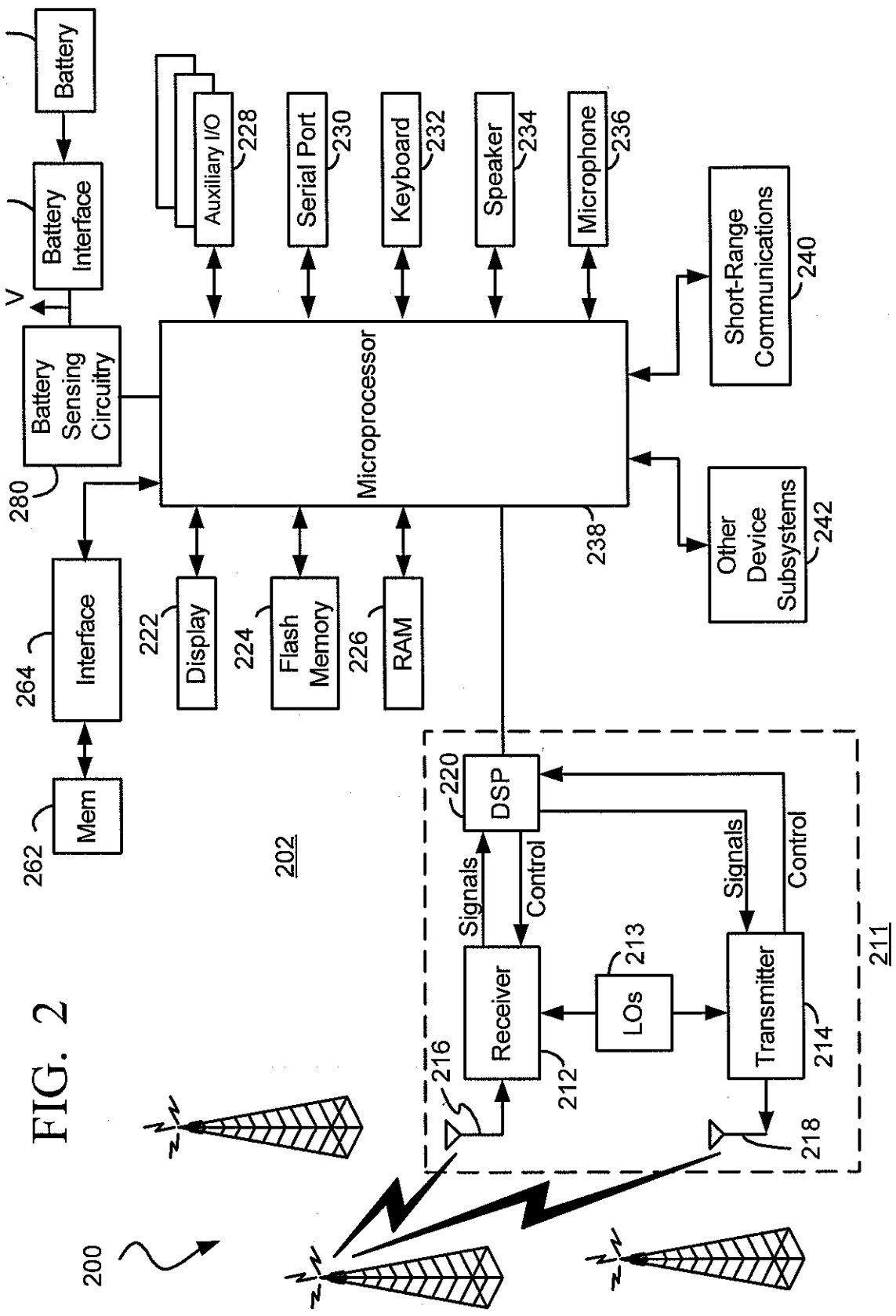
200
202
211
256
Battery
254
Battery Interface
V
280
Battery Sensing Circuitry
Auxiliary I/O
228
Serial Port
230
Keyboard
232
Speaker
234
Microphone
236
Microprocessor
238
Short-Range Communications
240
Other Device Subsystems
242
264
Interface
262
Mem
222
Display
224
Flash Memory
226
RAM
220
DSP
Signals
Control
Signals
Control
213
LOs
216
Receiver
212
Transmitter
214
218

FIG. 2

FIG. 3

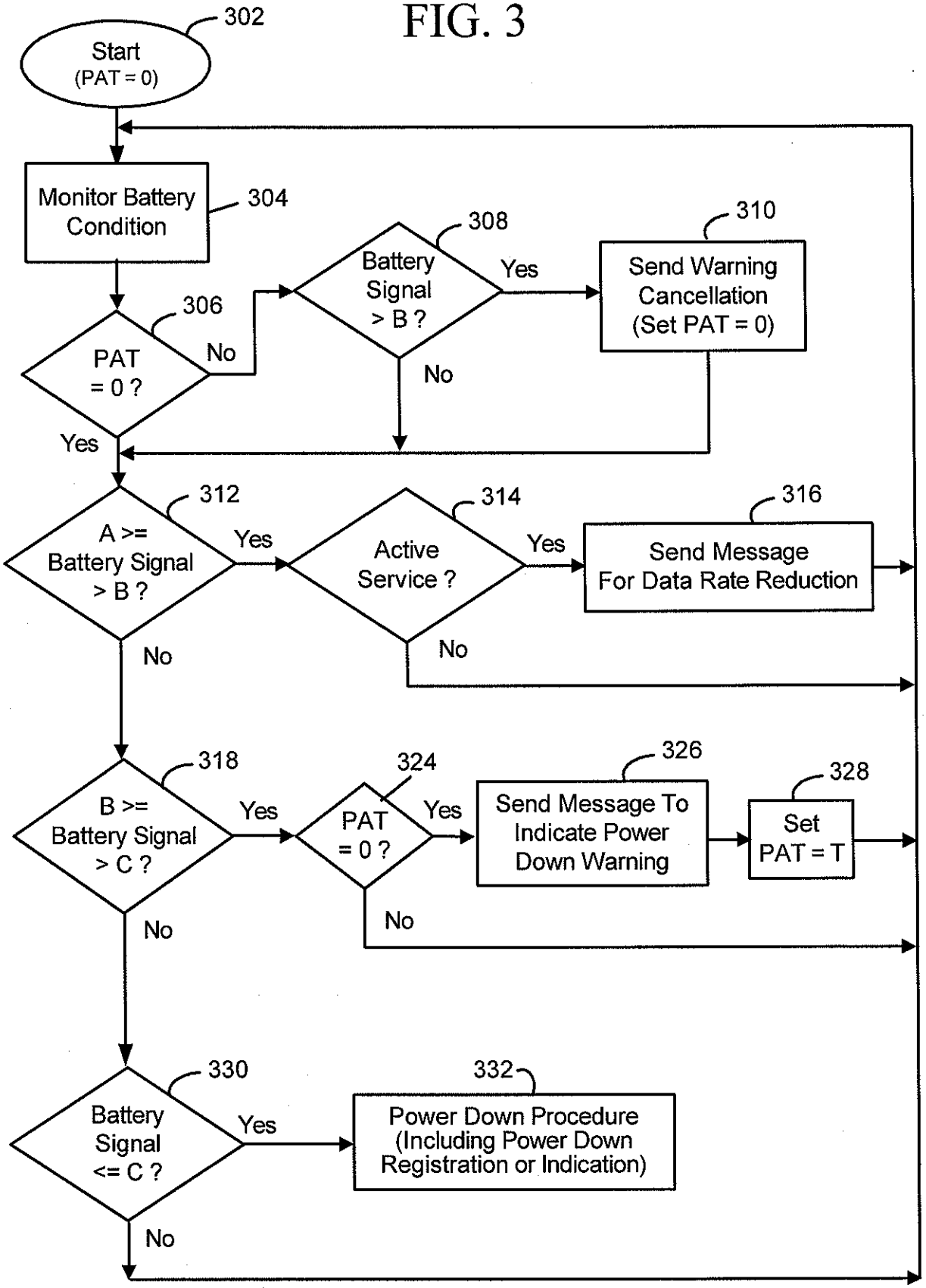
302
Start
(PAT = 0)
Monitor Battery Condition
304
306
PAT = 0 ?
No
Yes
308
Battery Signal > B ?
Yes
No
310
Send Warning Cancellation (Set PAT = 0)
312
A >= Battery Signal > B ?
Yes
No
314
Active Service ?
Yes
No
316
Send Message For Data Rate Reduction
318
B >= Battery Signal > C ?
Yes
No
324
PAT = 0 ?
Yes
No
326
Send Message To Indicate Power Down Warning
328
Set PAT = T
330
Battery Signal <= C ?
Yes
No
332
Power Down Procedure (Including Power Down Registration or Indication)

FIG. 4

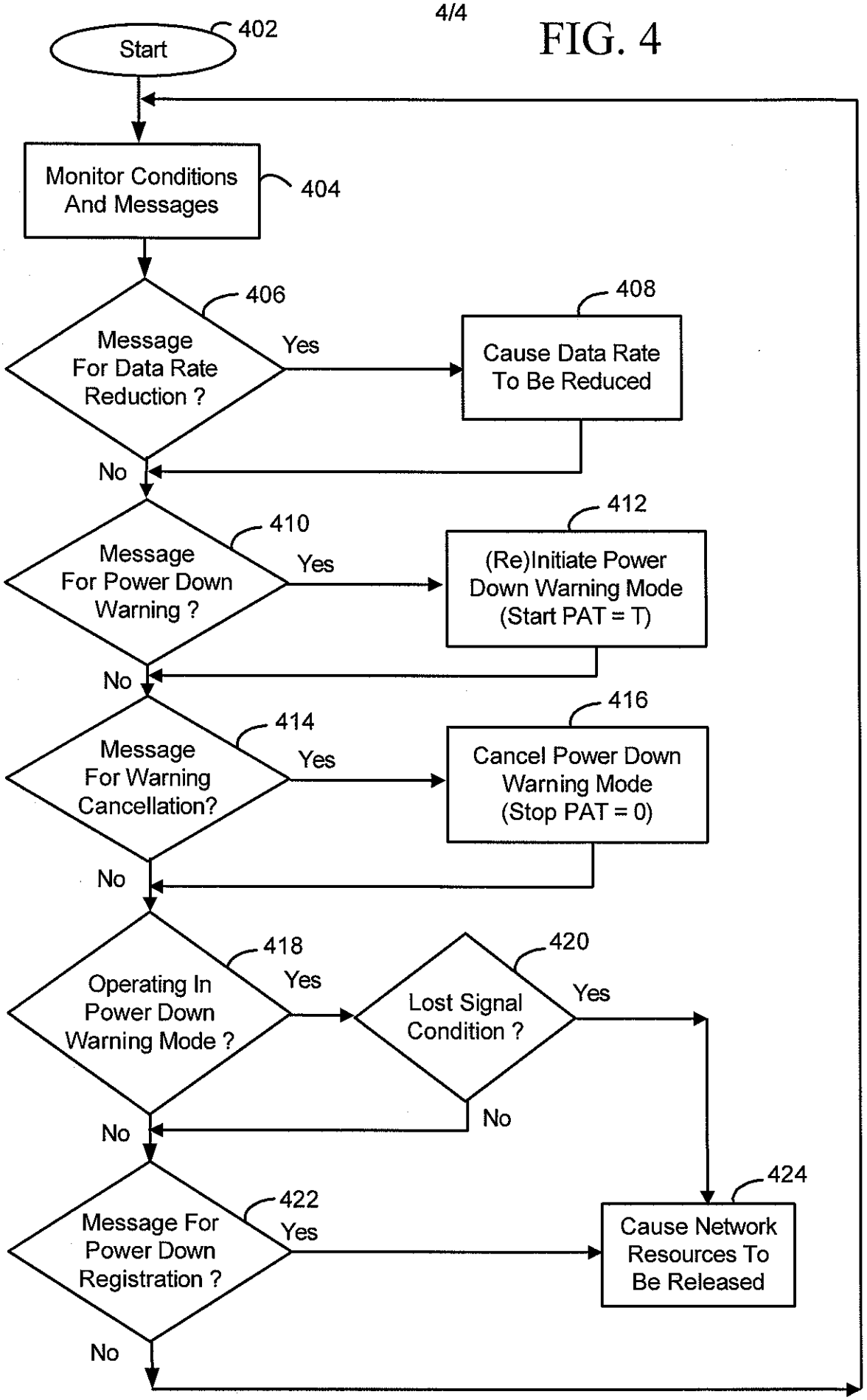
Start
402
Monitor Conditions And Messages
404
Message For Data Rate Reduction ?
406
Yes
Cause Data Rate To Be Reduced
408
No
Message For Power Down Warning ?
410
Yes
(Re)Initiate Power Down Warning Mode (Start PAT = T)
412
No
Message For Warning Cancellation?
414
Yes
Cancel Power Down Warning Mode (Stop PAT = 0)
416
No
Operating In Power Down Warning Mode ?
418
Yes
Lost Signal Condition ?
420
Yes
No
No
Message For Power Down Registration ?
422
Yes
Cause Network Resources To Be Released
424
No