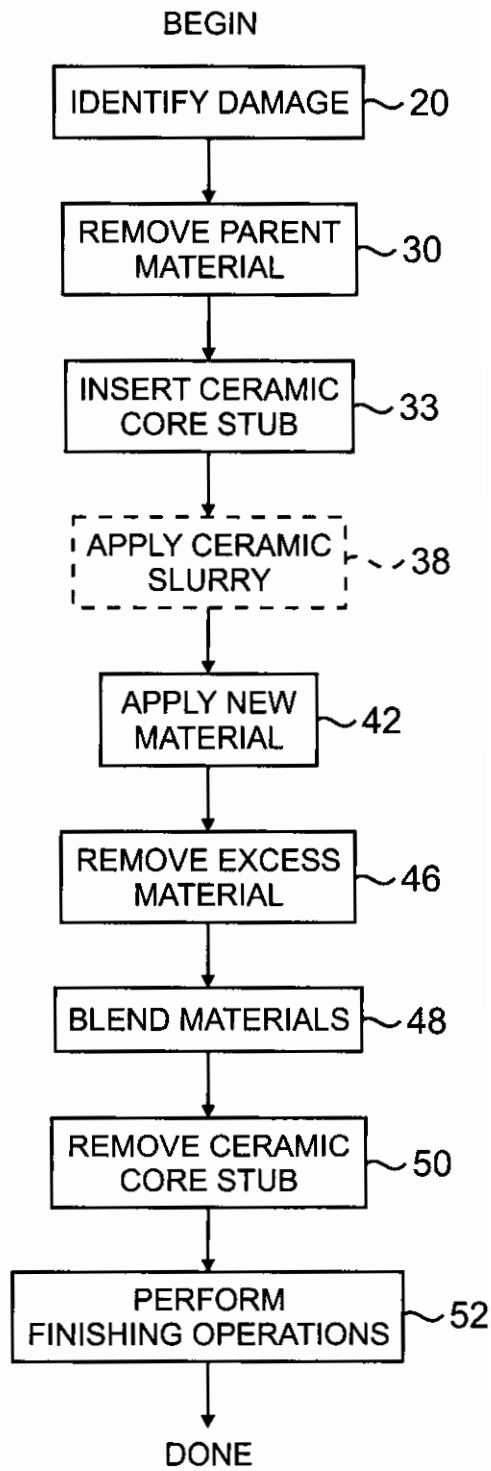
BEGIN
IDENTIFY DAMAGE
20
REMOVE PARENT MATERIAL
30
INSERT CERAMIC CORE STUB
33
APPLY CERAMIC SLURRY
38
APPLY NEW MATERIAL
42
REMOVE EXCESS MATERIAL
46
BLEND MATERIALS
48
REMOVE CERAMIC CORE STUB
50
PERFORM FINISHING OPERATIONS
52
DONE

FIG. 1

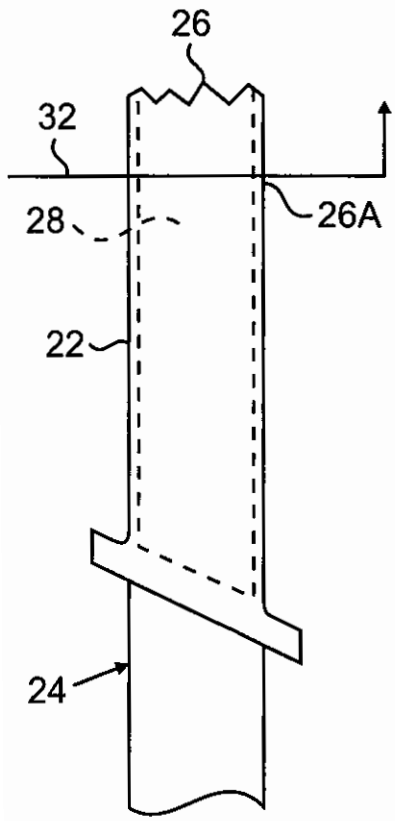

FIG. 2

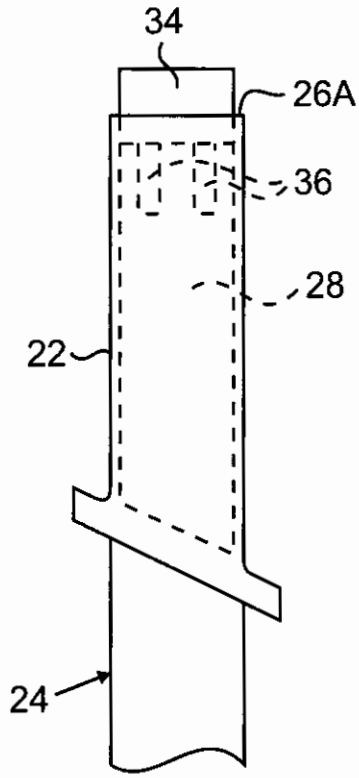

FIG. 3

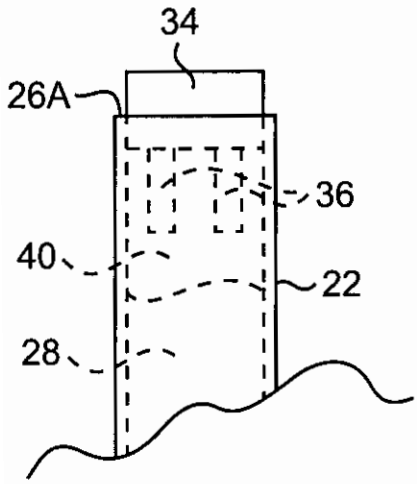

FIG. 4

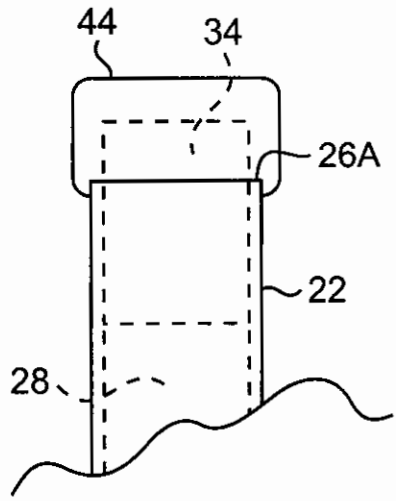

FIG. 5

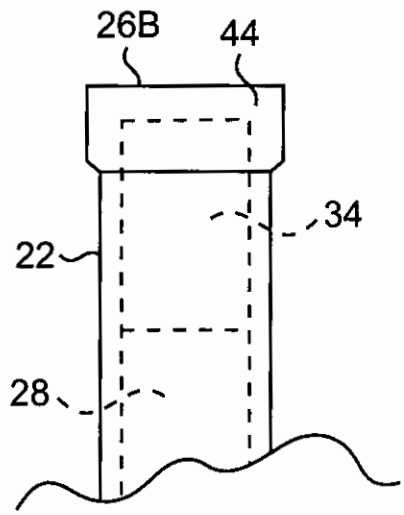

FIG. 6

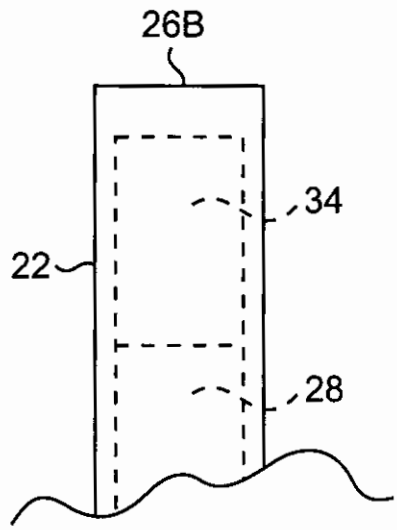

FIG. 7

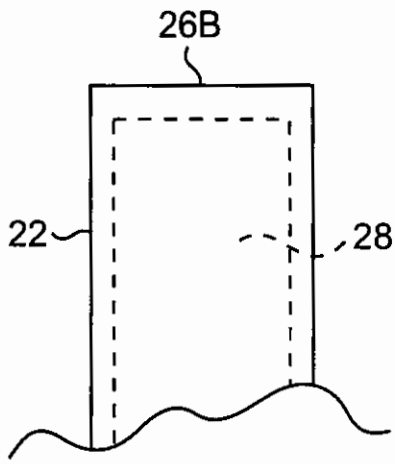

FIG. 8