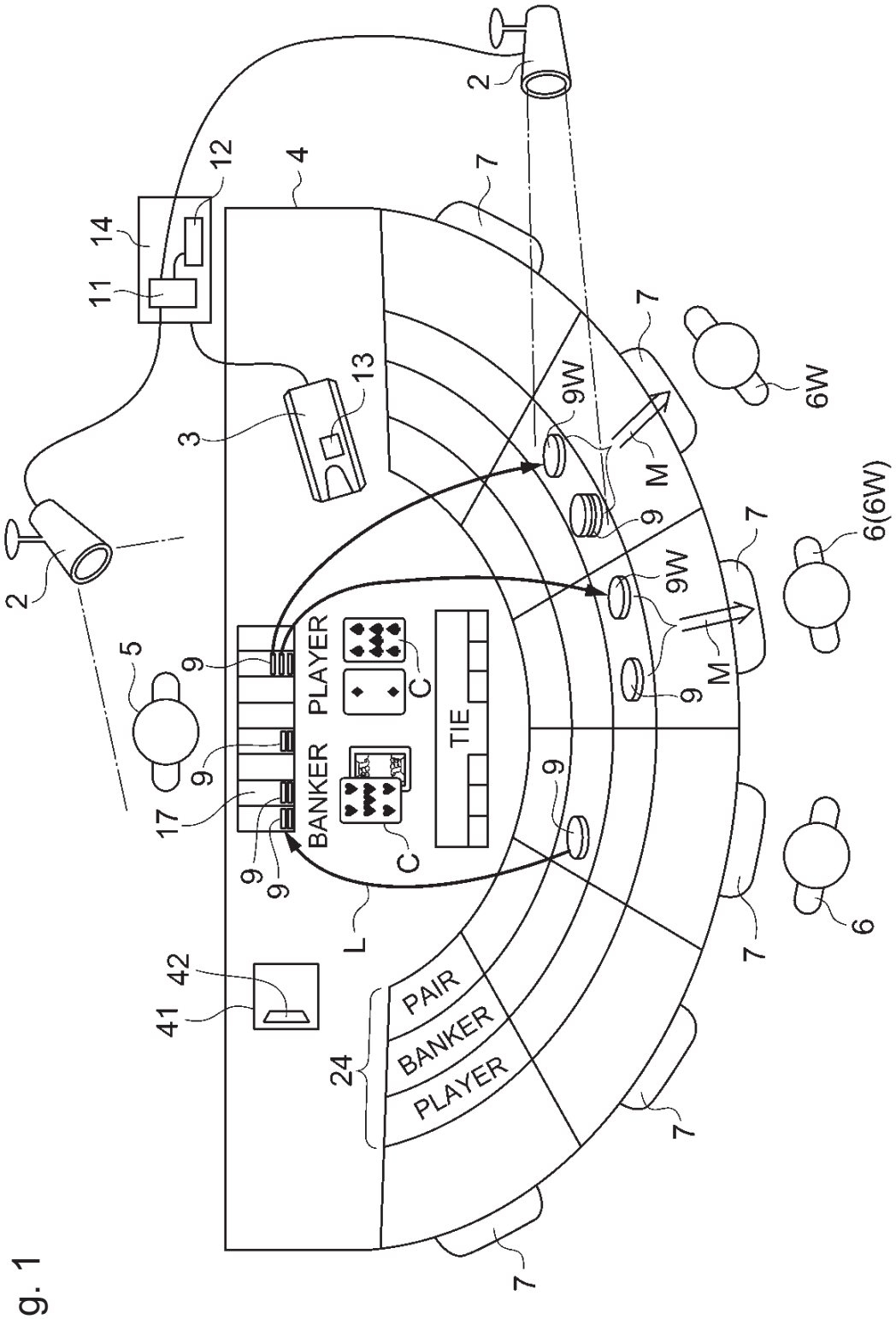
PLAYER
BANKER
TIE
PAIR
BANKER
PLAYER
C
C
L
M
M
9W
9W
6W
6(6W)
2
2
3
4
5
6
7
9
11
12
13
14
17
24
41
42

Fig. 1

Fig. 2A

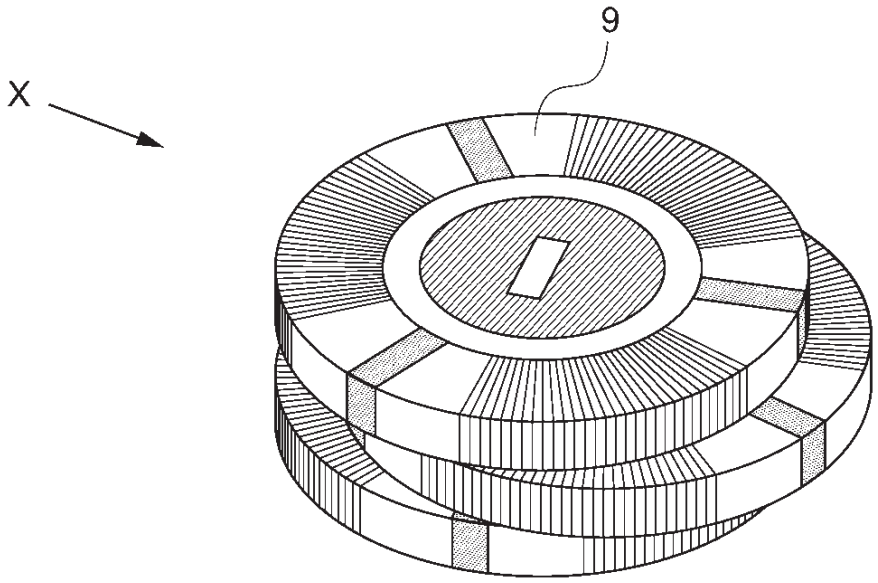

Fig. 2B

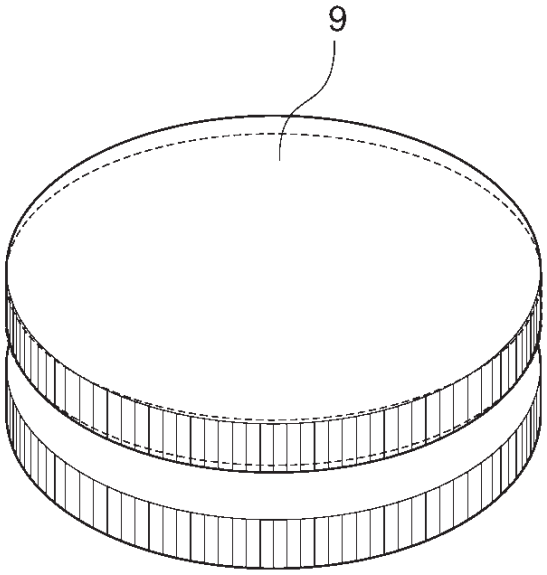

Fig. 3A

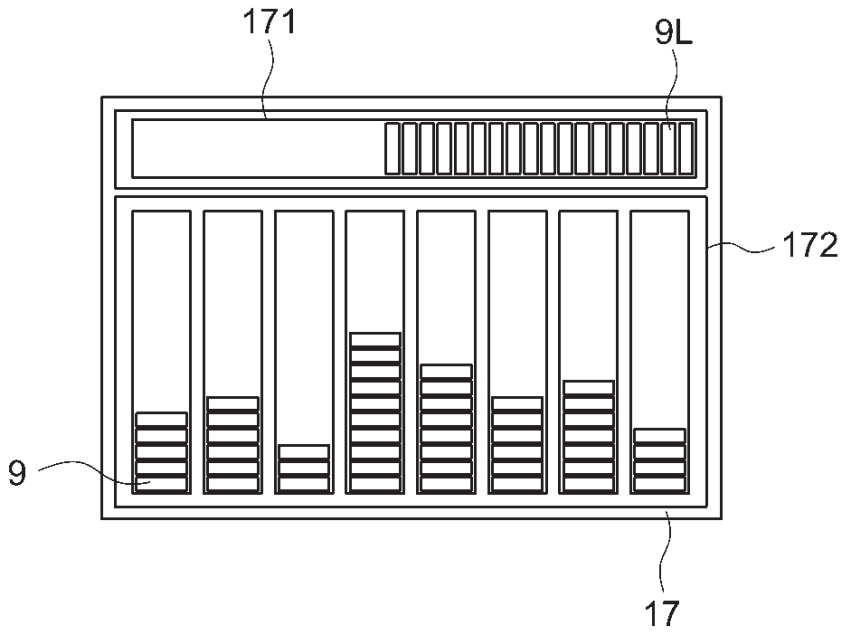

Fig. 3B

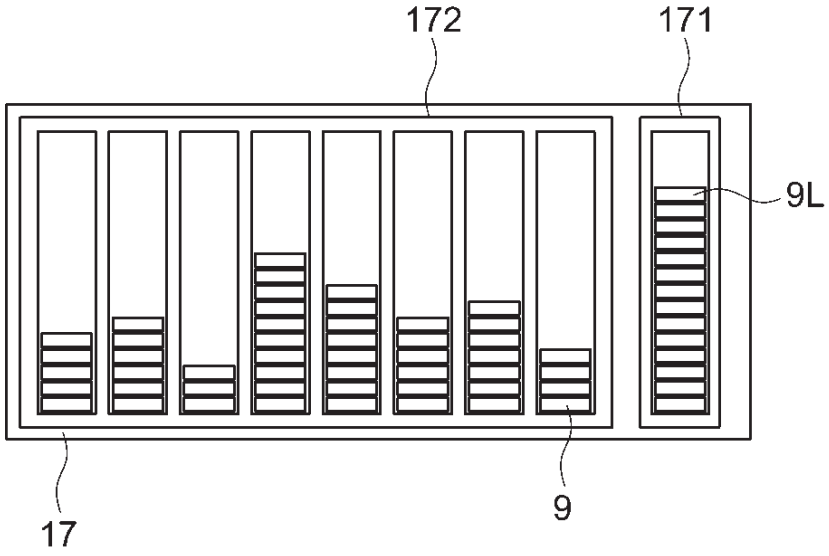

Fig. 4



Fig. 5A

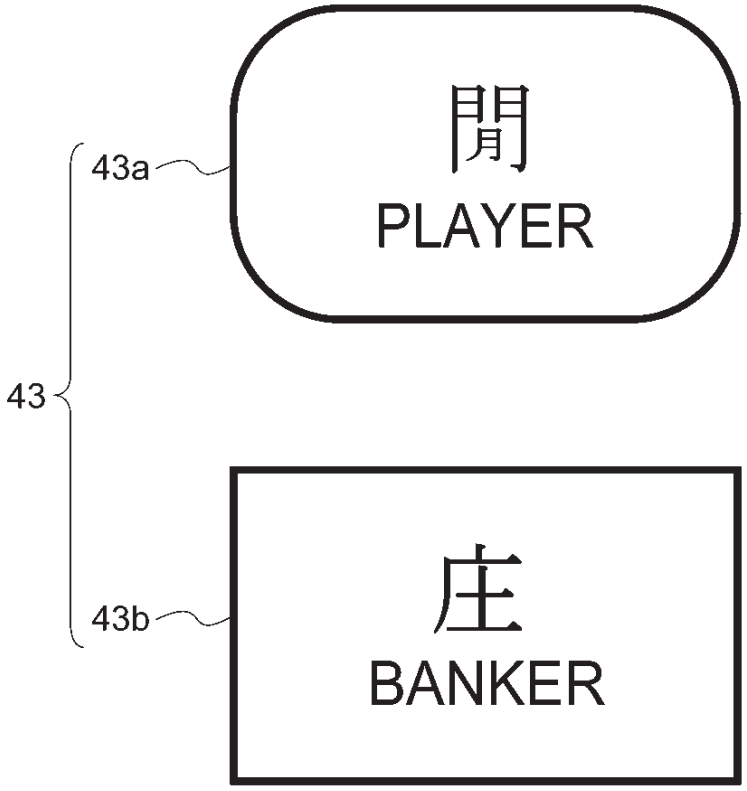

Fig. 5B

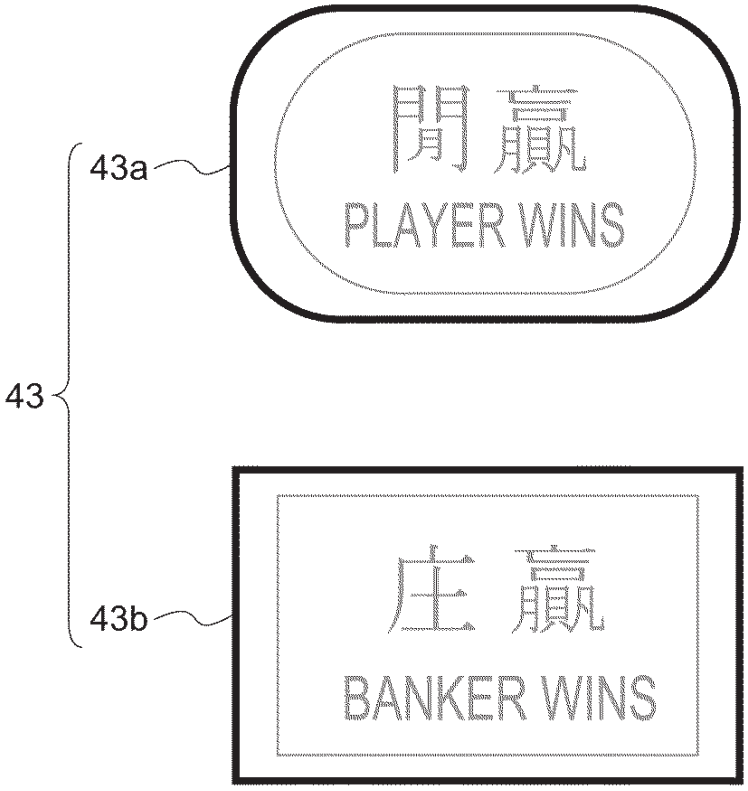

Fig. 6

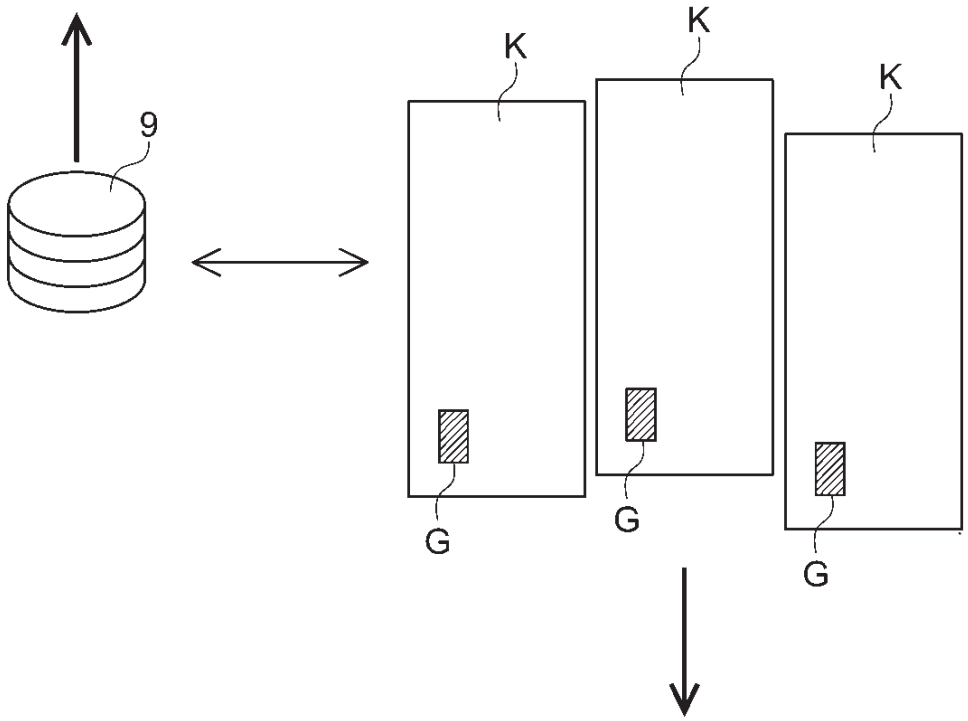

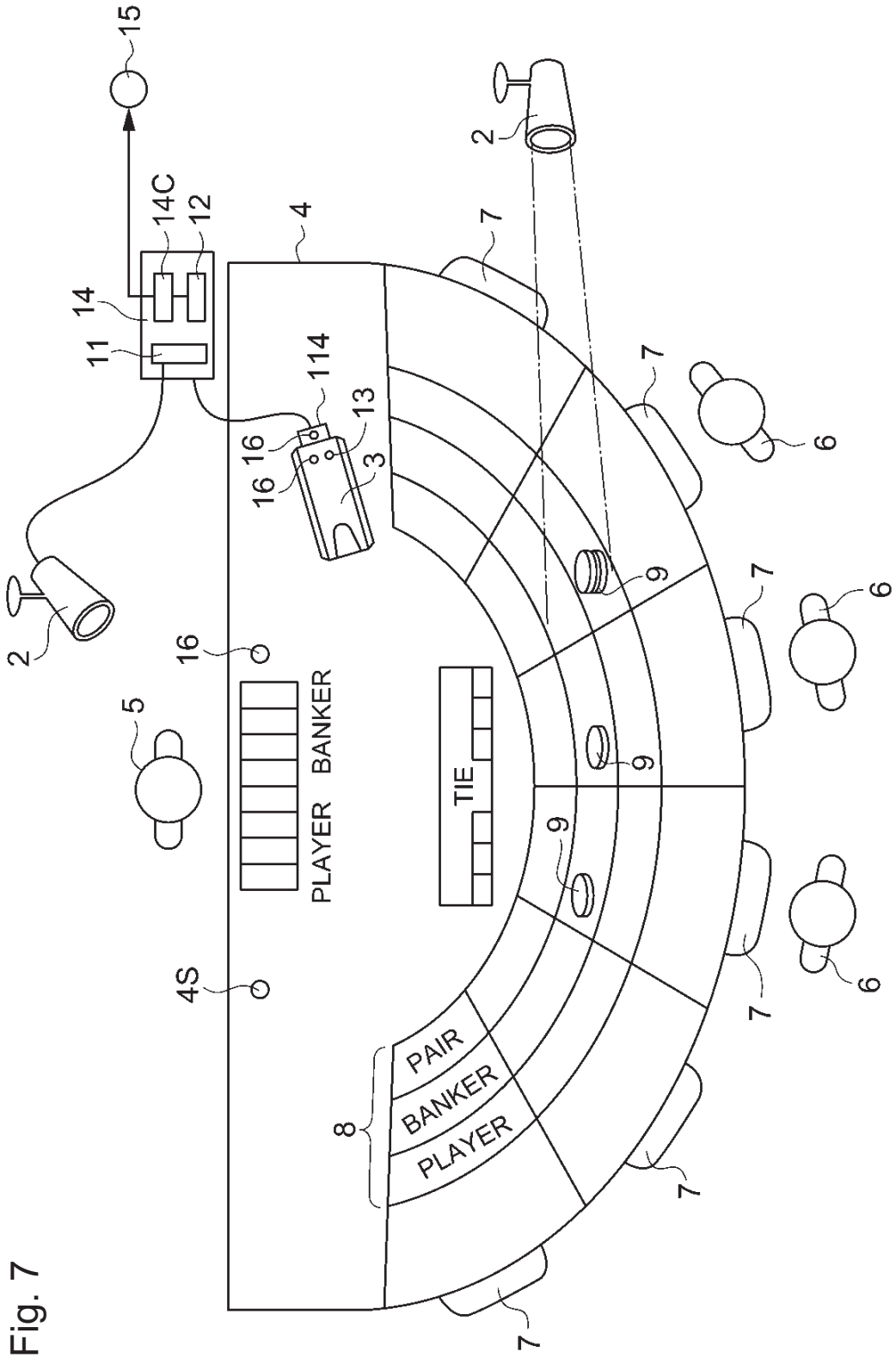
15
14C
12
14
11
4
114
13
16
16
3
2
2
7
7
7
7
7
7
6
6
6
9
9
9
16
5
PLAYER
BANKER
TIE
4S
PAIR
BANKER
PLAYER
8

Fig. 7

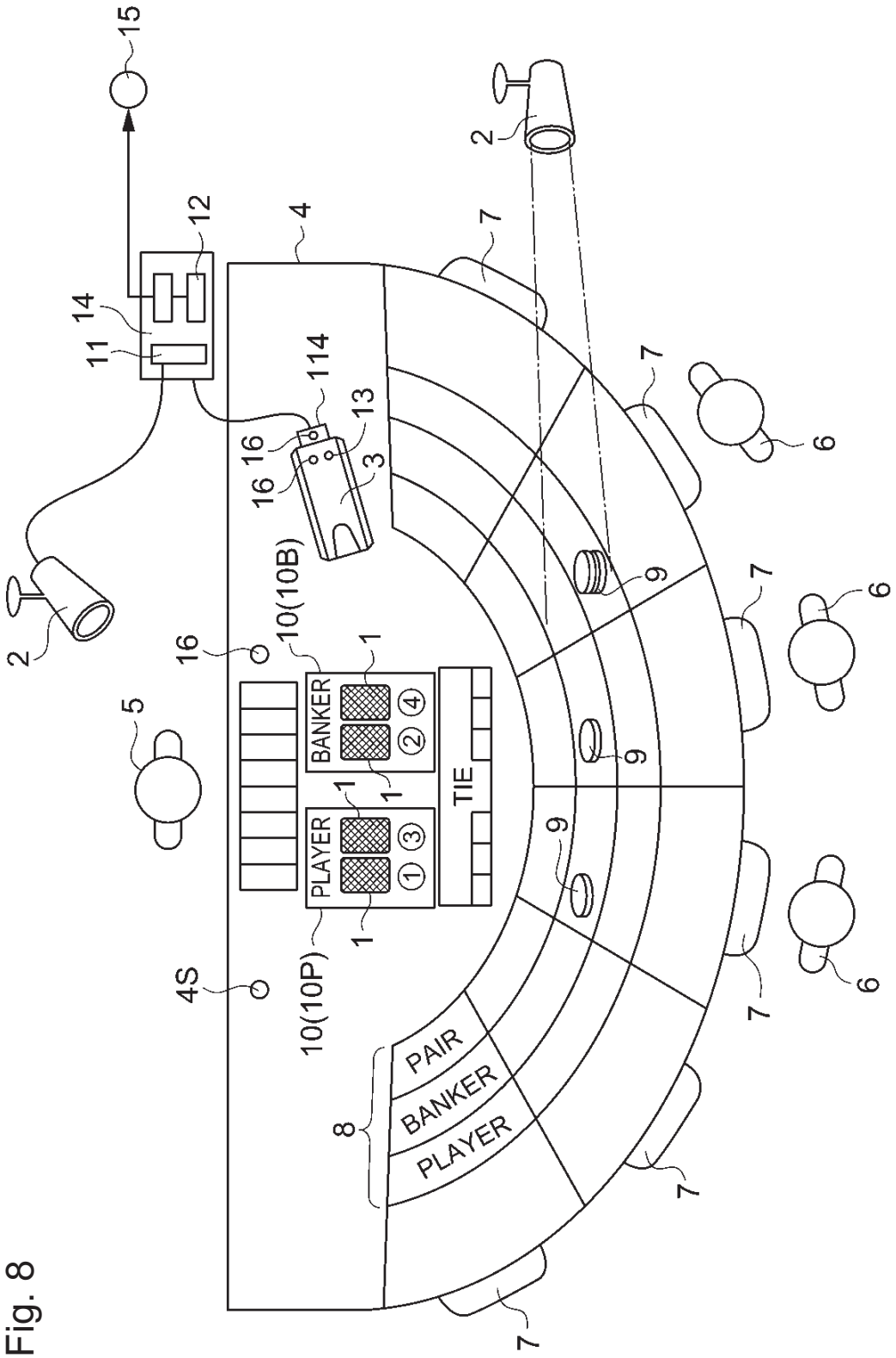
15
12
14
11
4
114
13
16
16
3
2
2
7
7
7
7
7
7
6
6
6
9
9
9
10(10B)
10(10P)
16
1
1
1
1
BANKER
PLAYER
TIE
5
4S
8
PAIR
BANKER
PLAYER

Fig. 8

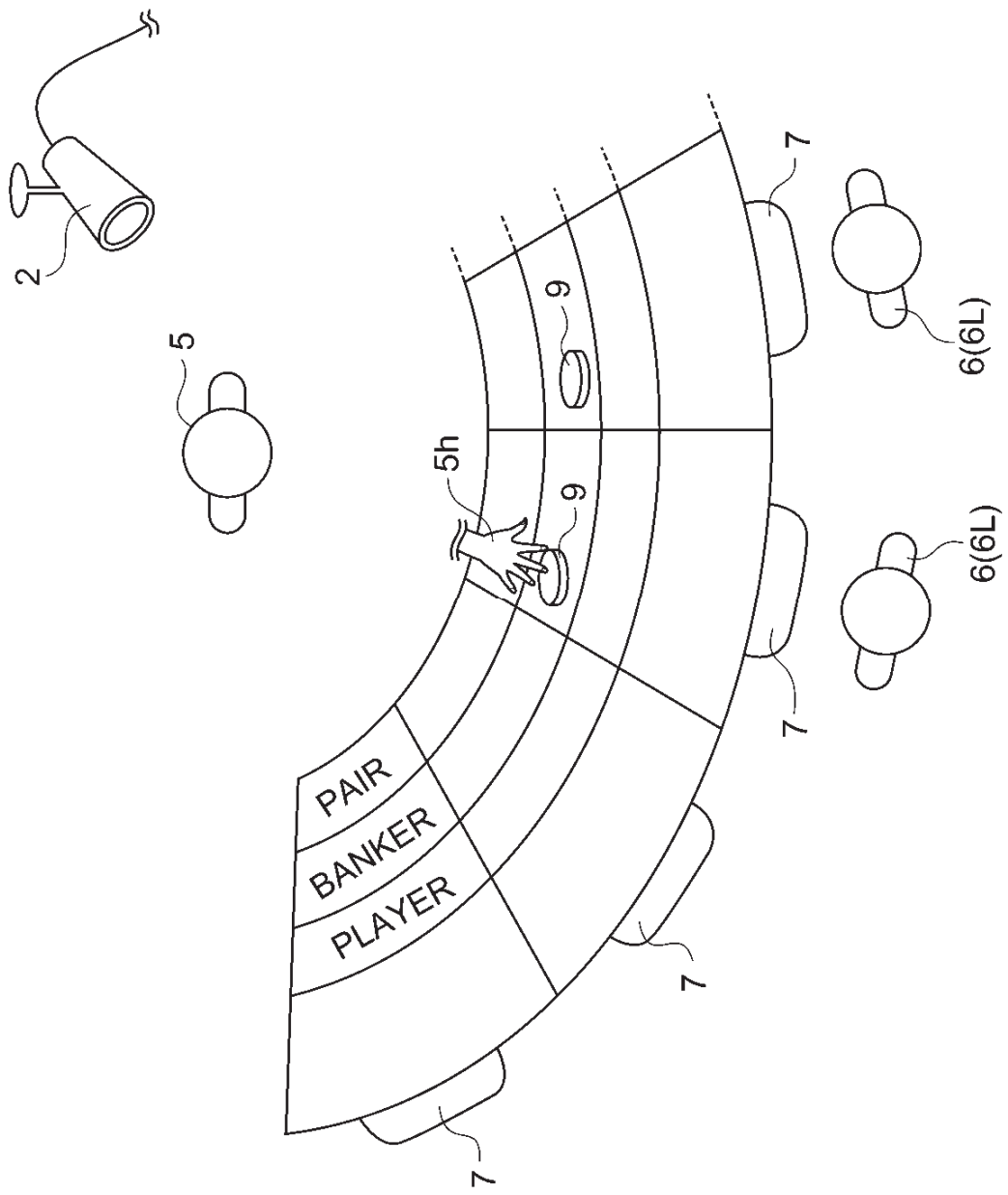

Fig. 9

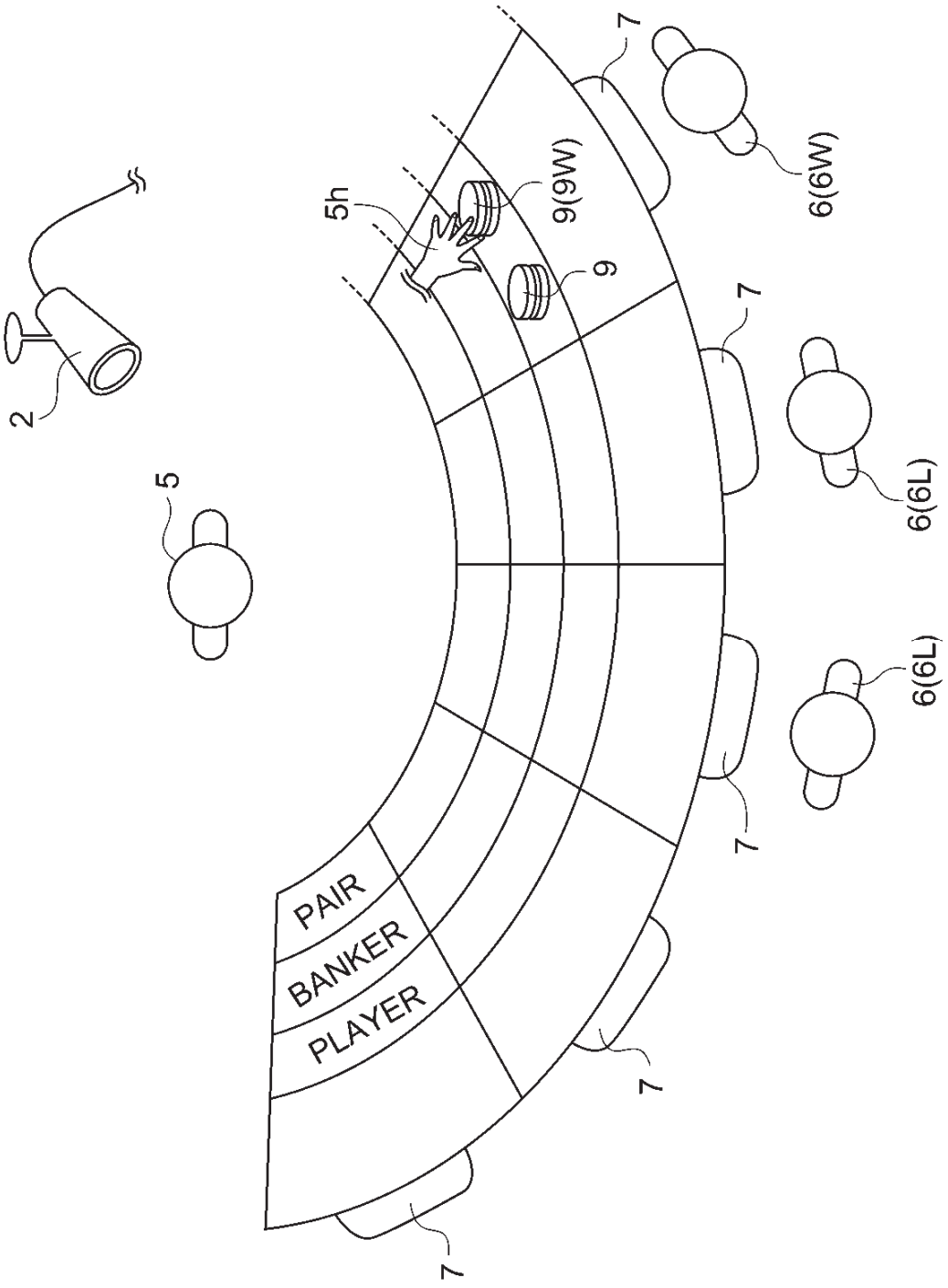

Fig. 10

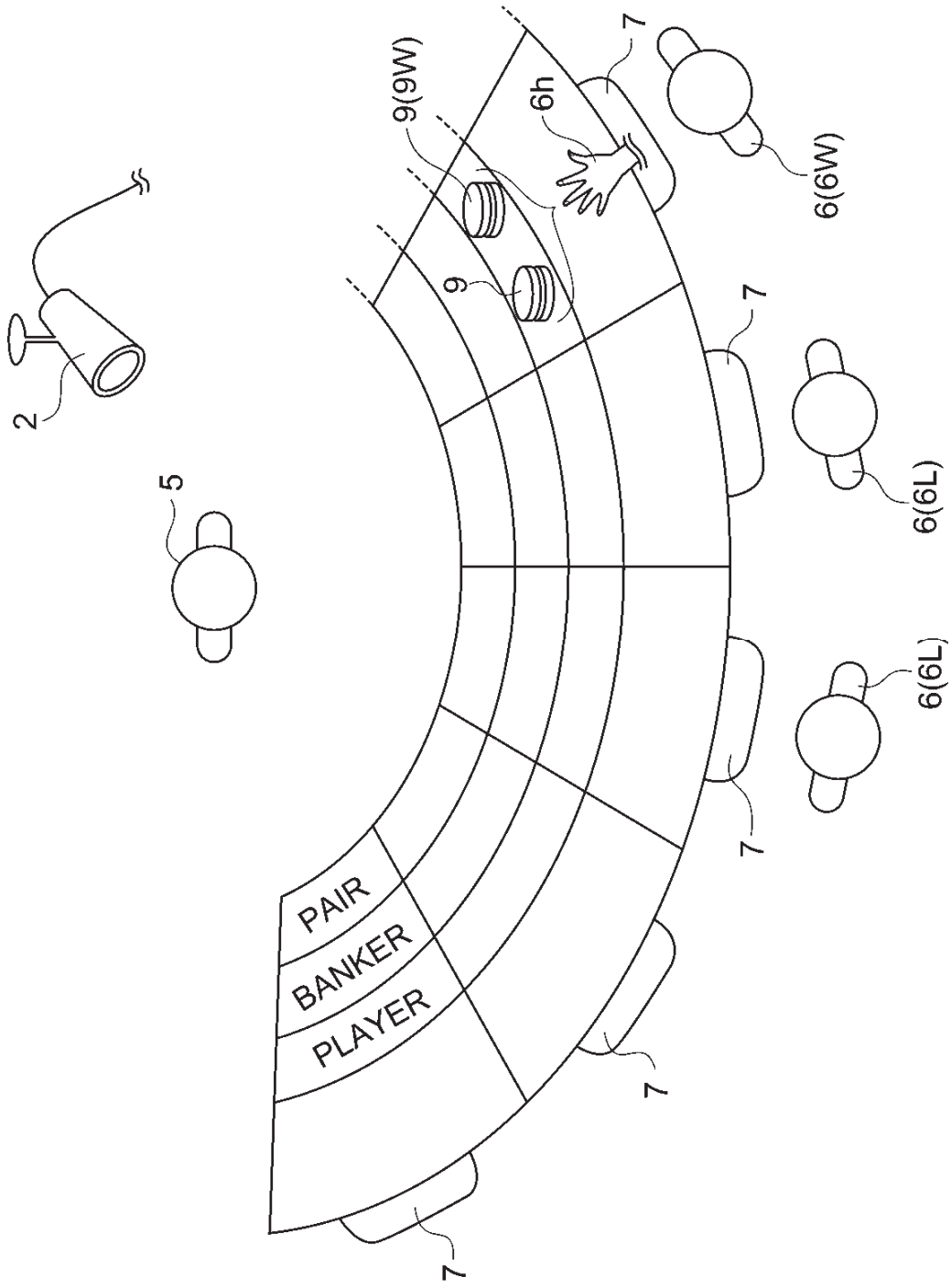

Fig. 11

Fig. 12A

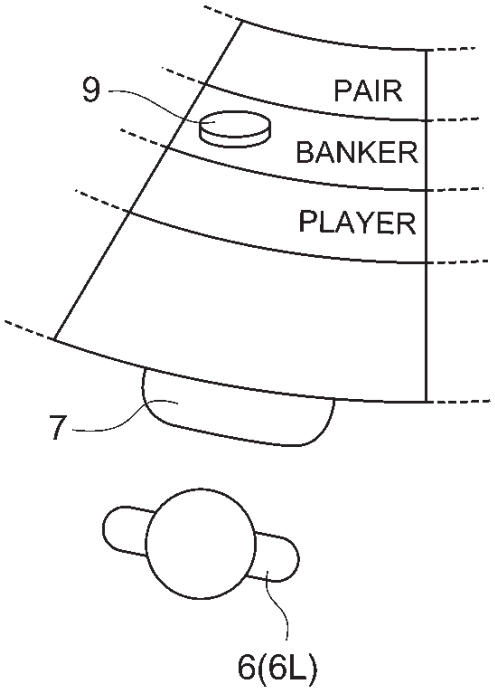

Fig. 12B

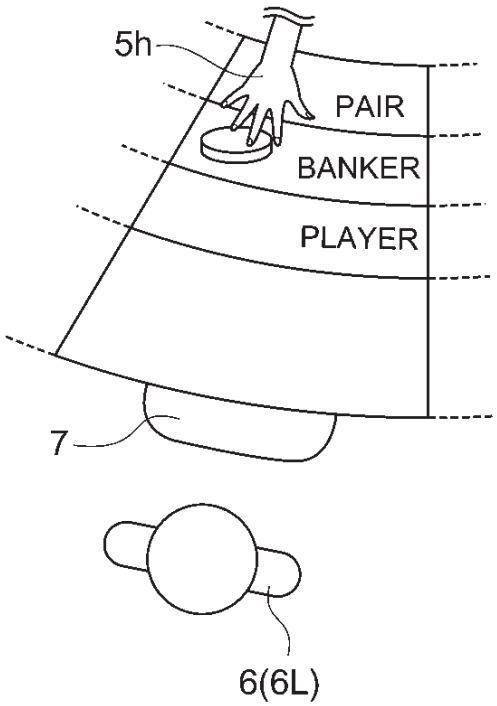

Fig. 12C

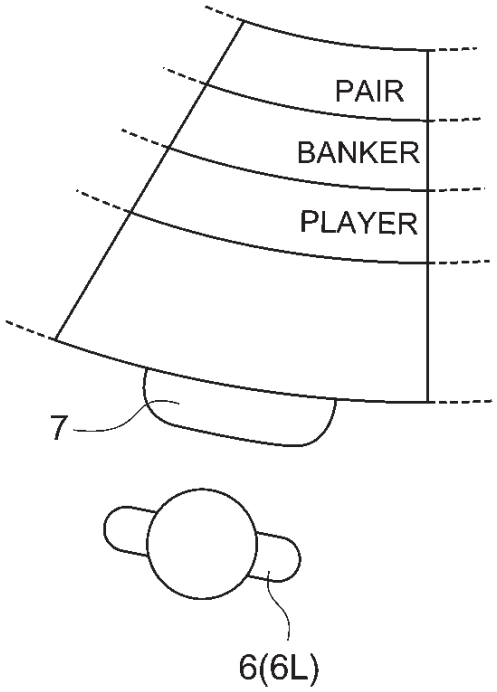

Fig. 13

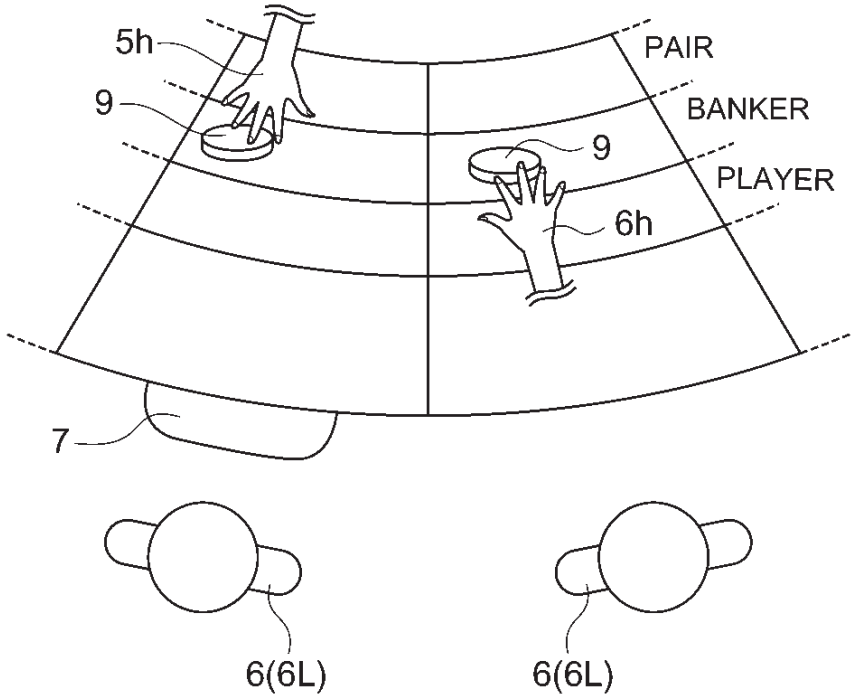

Fig. 14A

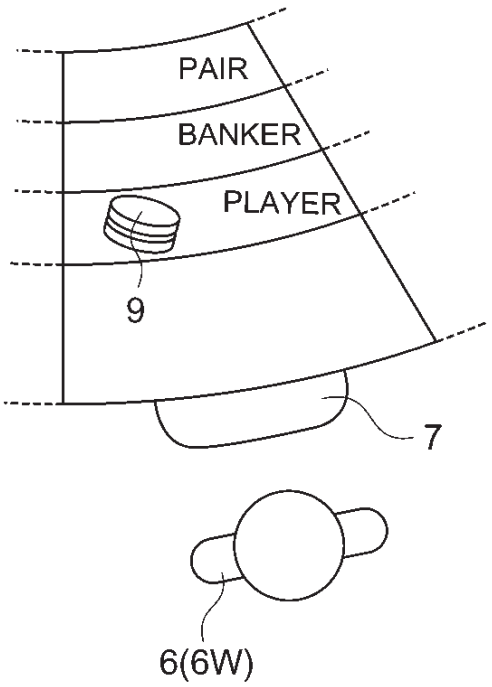

Fig. 14B

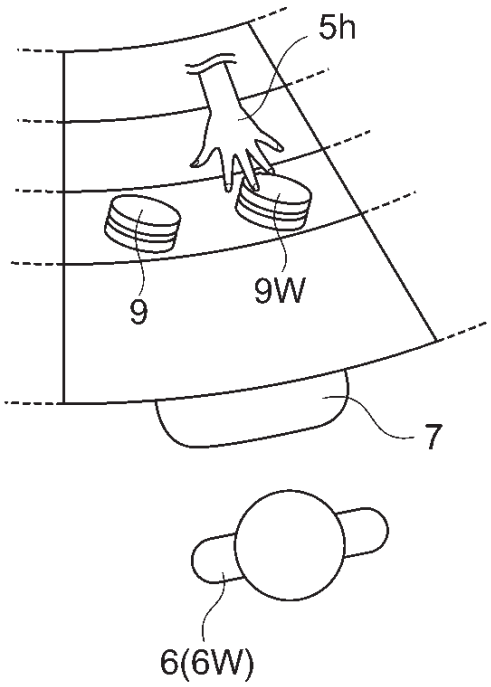

Fig. 14C

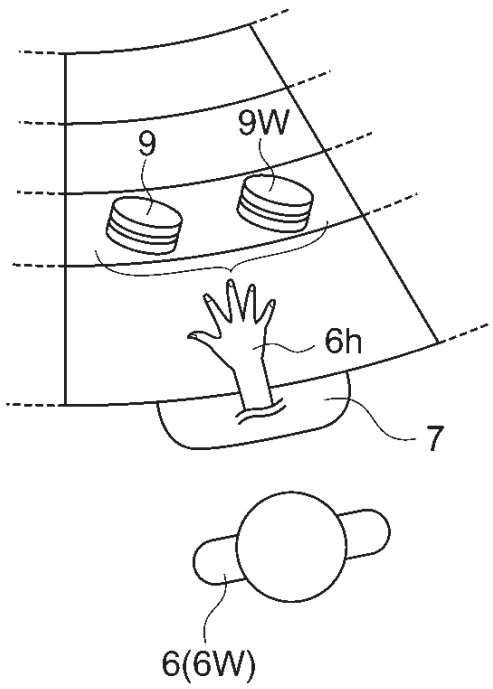

Fig. 14D

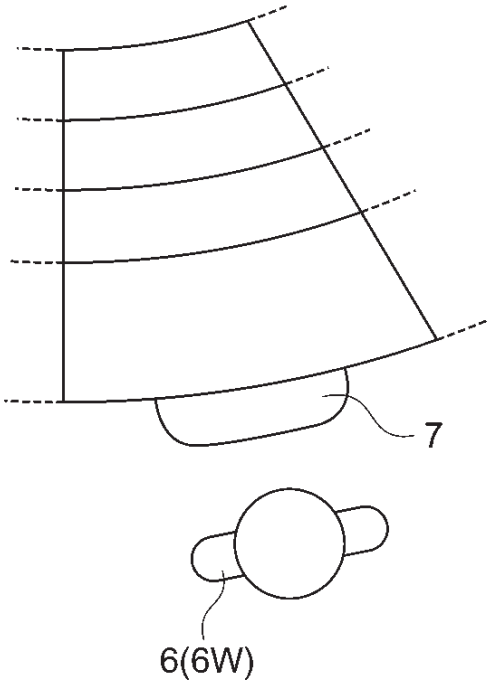

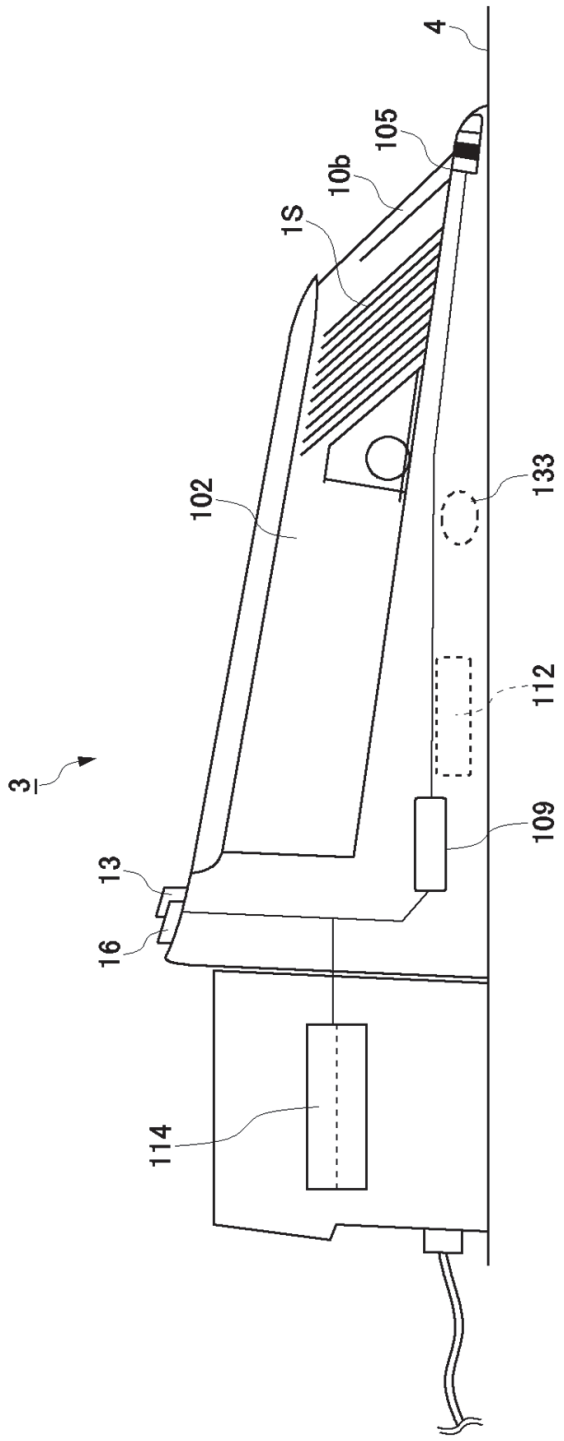

Fig. 15

Fig. 16

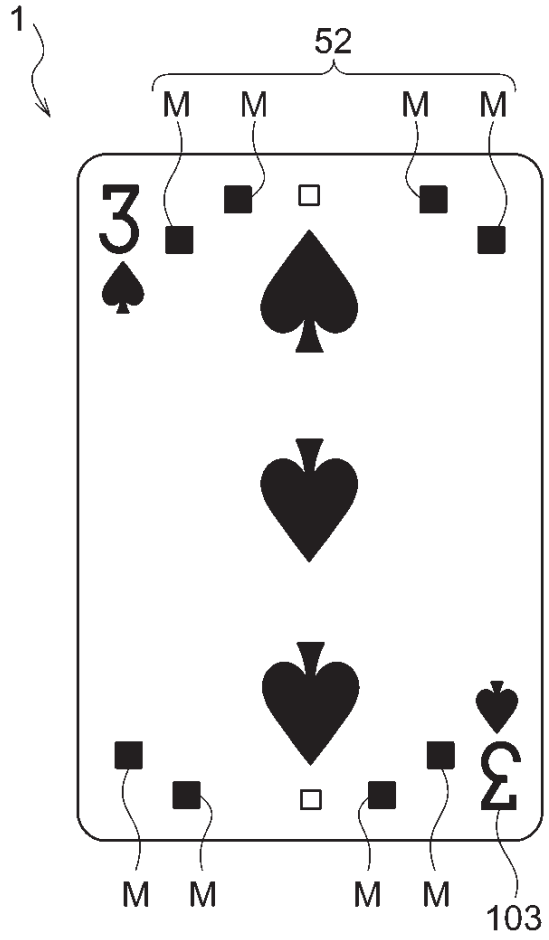

Fig. 17

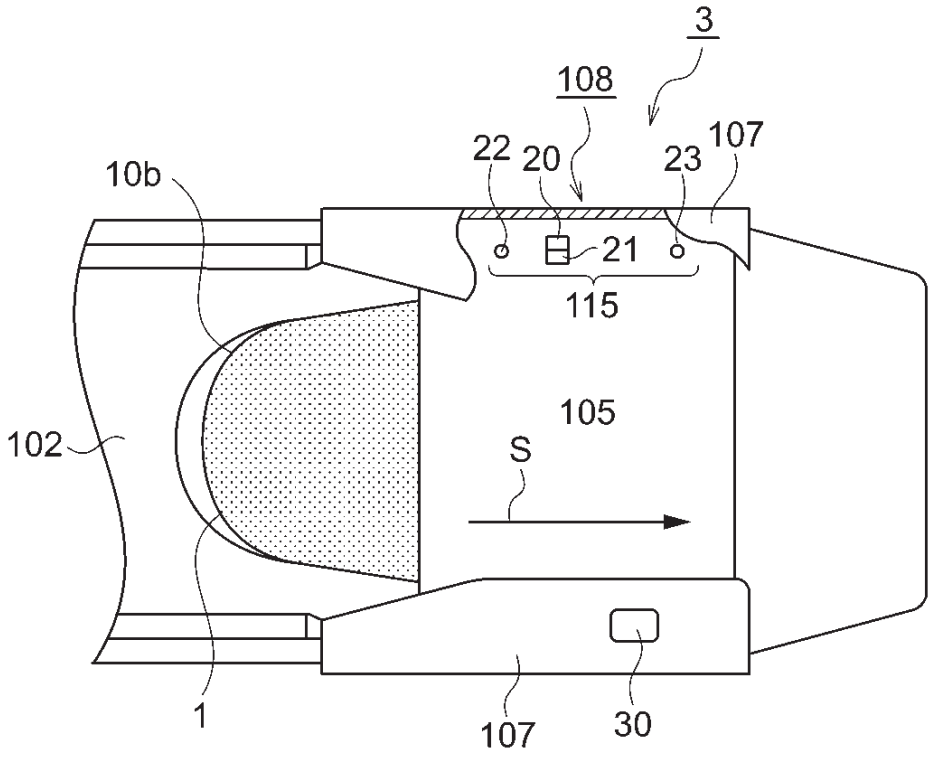

Fig. 18A

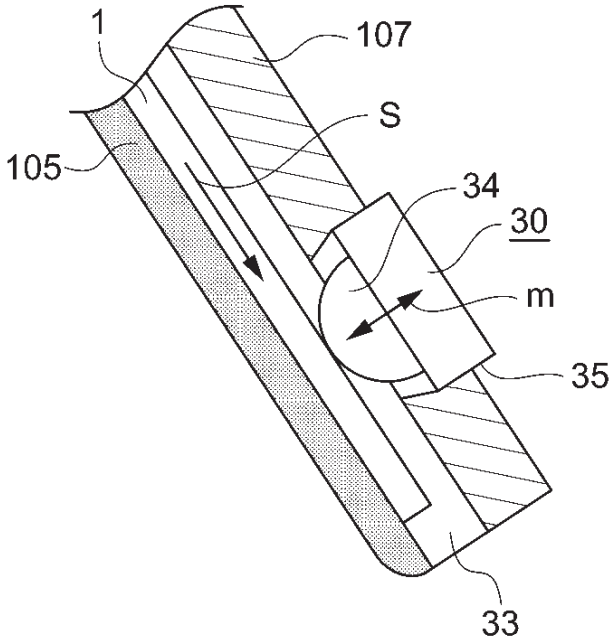

Fig. 18B

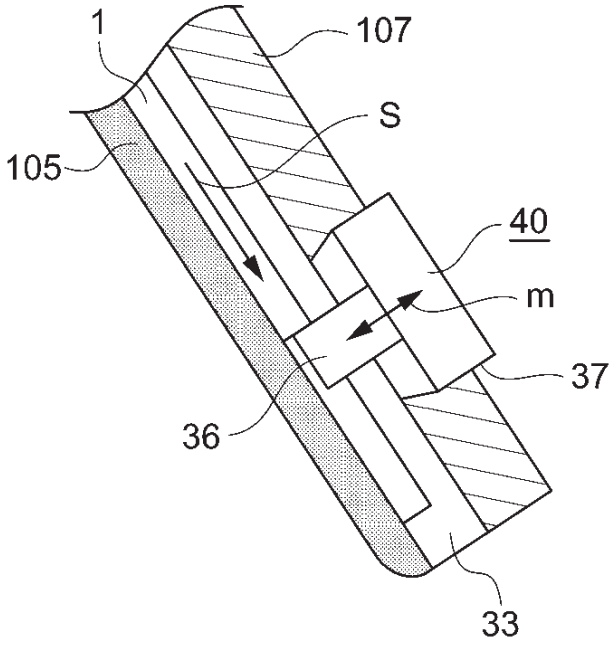

Fig. 19

COMBI-NATION	POSITIONAL RELATIONSHIP OF MARK	SENSOR OUTPUT
1	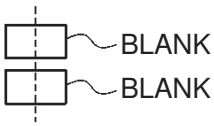	
2	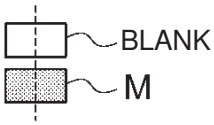	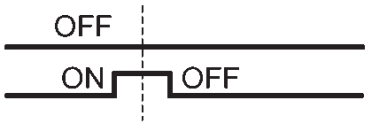
3	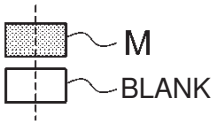	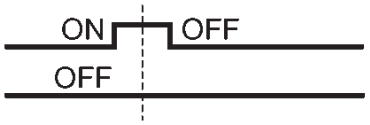
4	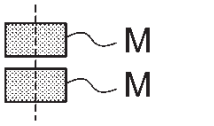	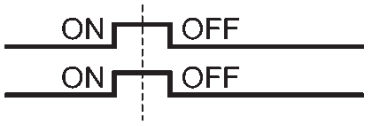

Fig. 20

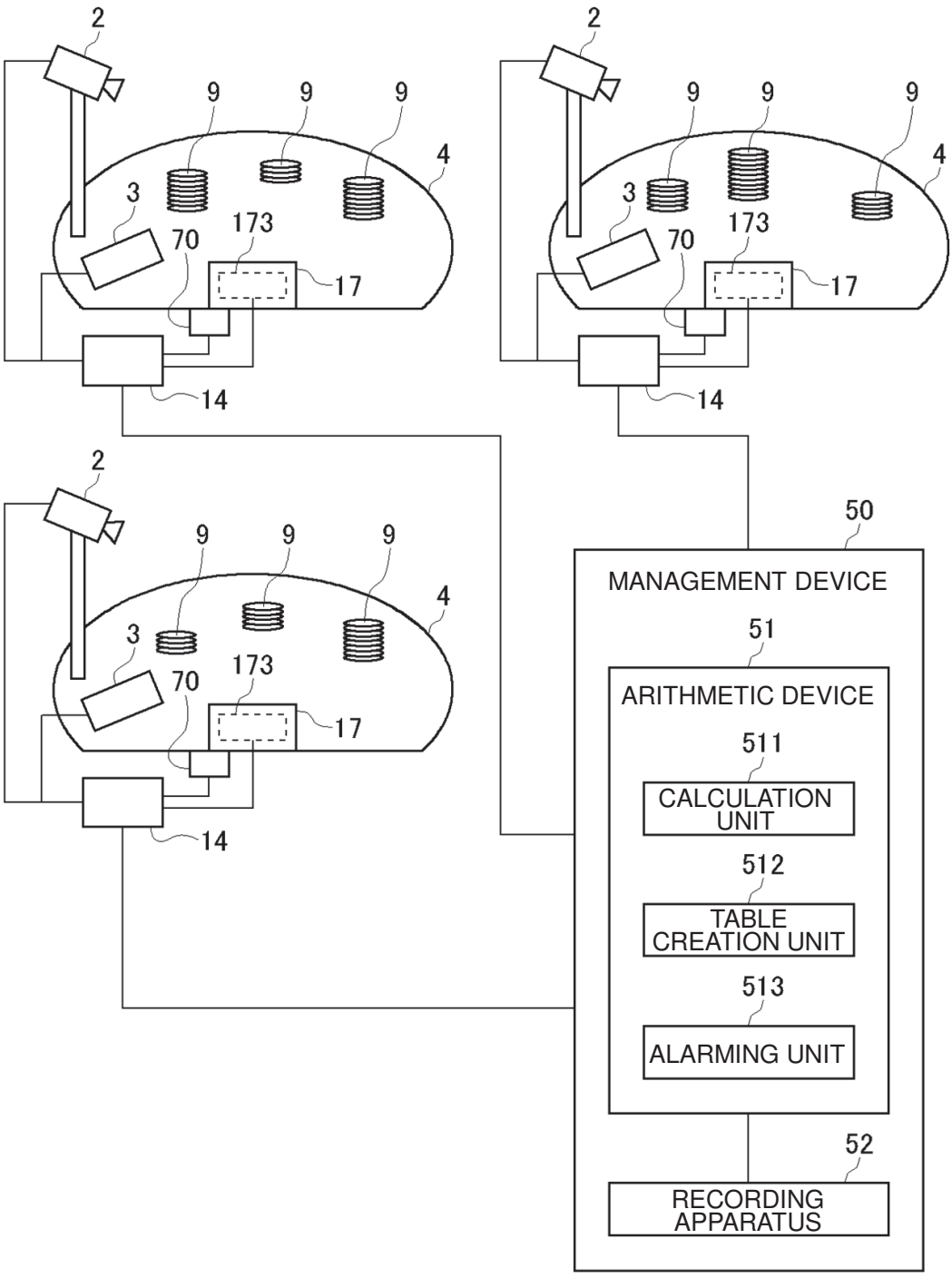
2
9
9
9
4
3
70
173
17
14
50
MANAGEMENT DEVICE
51
ARITHMETIC DEVICE
511
CALCULATION UNIT
512
TABLE CREATION UNIT
513
ALARMING UNIT
52
RECORDING APPARATUS

Fig. 21

Table No.	Chip Count								Total Amount
	$100,000	$50,000	$10,000	$5,000	$1,000	$500	$100	$25	
1	4	10	37	43	62	70	85	26	$1,591,150
2	5	11	35	20	89	67	82	23	$1,631,275
3	5	12	36	36	56	66	52	36	$1,735,100
4	2	7	49	45	78	65	61	31	$1,382,375
5	3	15	36	18	52	63	70	25	$1,591,125
6	4	10	44	41	80	60	80	38	$1,663,950
7	6	5	34	26	51	66	77	42	$1,412,750
.	.	.	.	.	.	.	.	.	.
.	.	.	.	.	.	.	.	.	.
.	.	.	.	.	.	.	.	.	.
73	36	24	50	20	12	27	31	18	$5,429,050
74	47	20	28	21	46	21	40	12	$6,145,800
75	4	5	30	20	66	68	80	27	$1,158,675
Total	311	750	2904	2454	5014	4896	5432	2368	$117,974,400

Fig. 22

Table 1									
Game No.	$100,000	$50,000	$10,000	$5,000	$1,000	$500	$100	$25	Total Amount
1	0	0	0	0	1	1	3	1	$1,825
2	0	0	1	0	0	2	4	0	$11,400
3	0	0	0	2	3	3	2	0	$14,700
.	.	.	.	.	.	.	.	.	.
.	.	.	.	.	.	.	.	.	.
.	.	.	.	.	.	.	.	.	.
79	0	0	2	0	2	0	2	1	$22,225
80	0	0	0	1	0	1	2	0	$5,700
Total	4	10	37	43	62	70	85	26	$1,591,150

Fig. 23

Table No.	Total Bet Amount	Gross Profit	Profit Ratio
1	$1,700,200	$42,505	2.5%
2	$1,460,400	$58,416	4.0%
3	$1,050,500	-$21,010	-2.0%
4	$1,650,700	$39,617	2.4%
5	$968,000	$32,912	3.4%
6	$1,104,200	$16,563	1.5%
7	$1,458,500	$90,427	6.2%
.	.	.	.
.	.	.	.
.	.	.	.
75	$1,755,425	$43,886	2.5%
Total	$100,633,929	$3,019,018	3.0%

Fig. 24

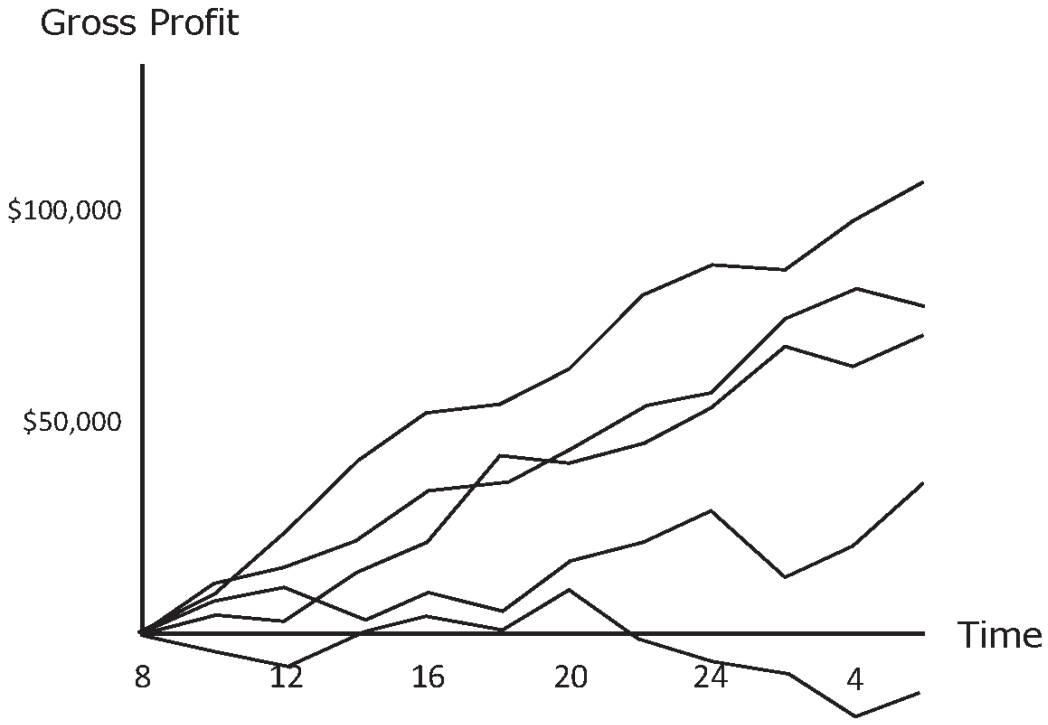

Fig. 25

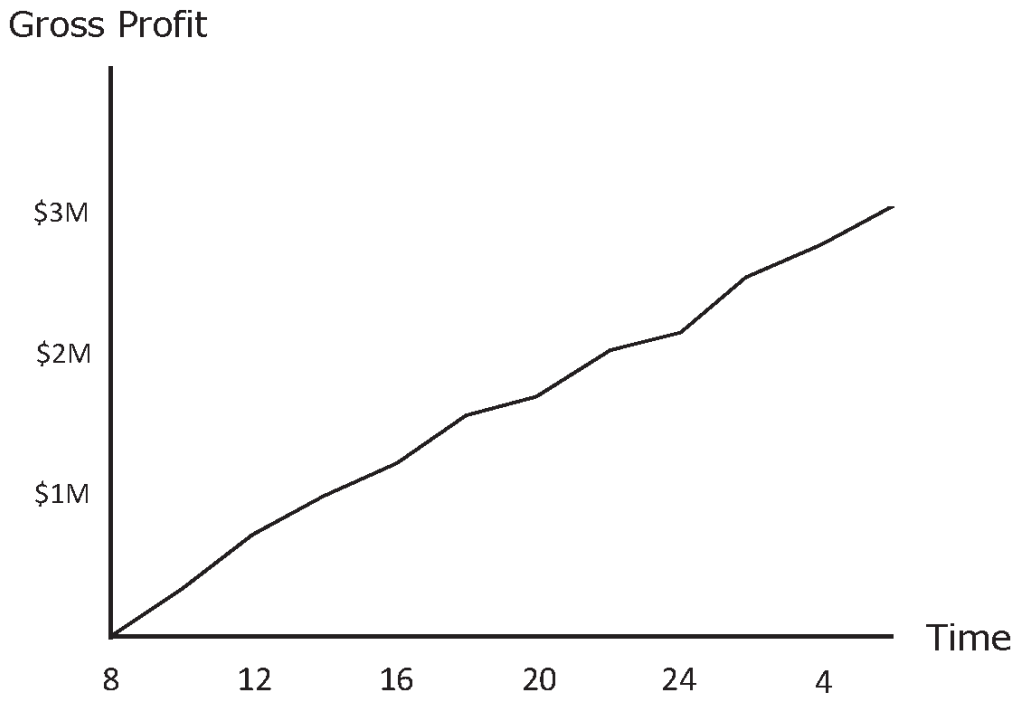

Fig. 26

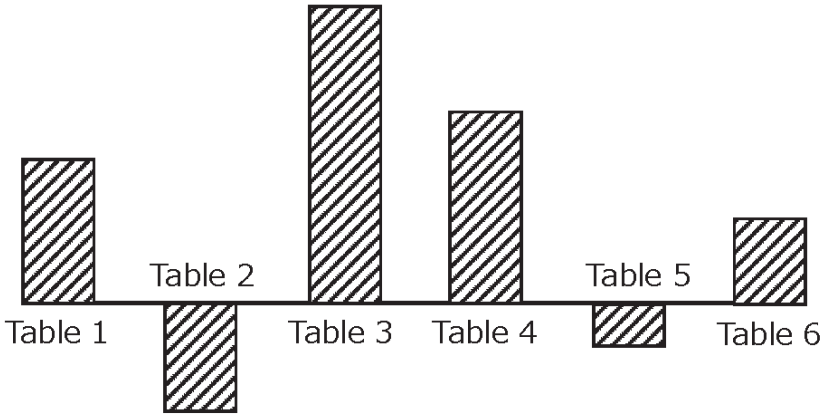

Fig. 27

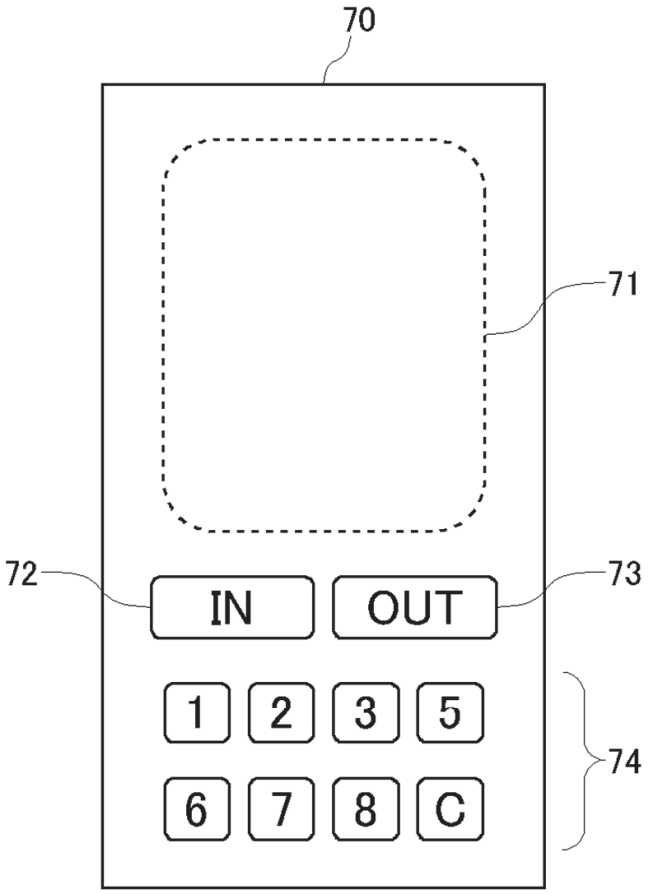

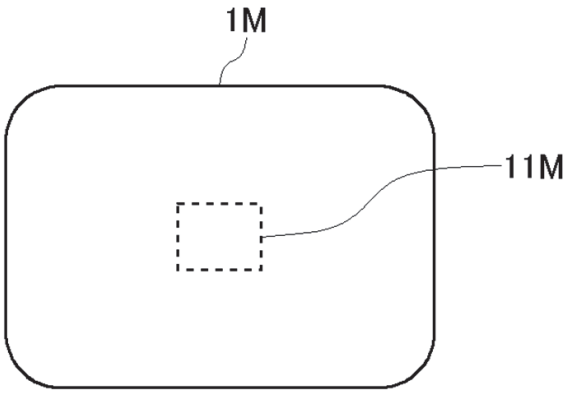

Fig. 28

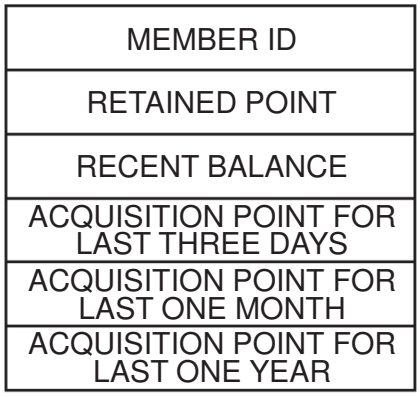
MEMBER ID
RETAINED POINT
RECENT BALANCE
ACQUISITION POINT FOR LAST THREE DAYS
ACQUISITION POINT FOR LAST ONE MONTH
ACQUISITION POINT FOR LAST ONE YEAR

Fig. 29

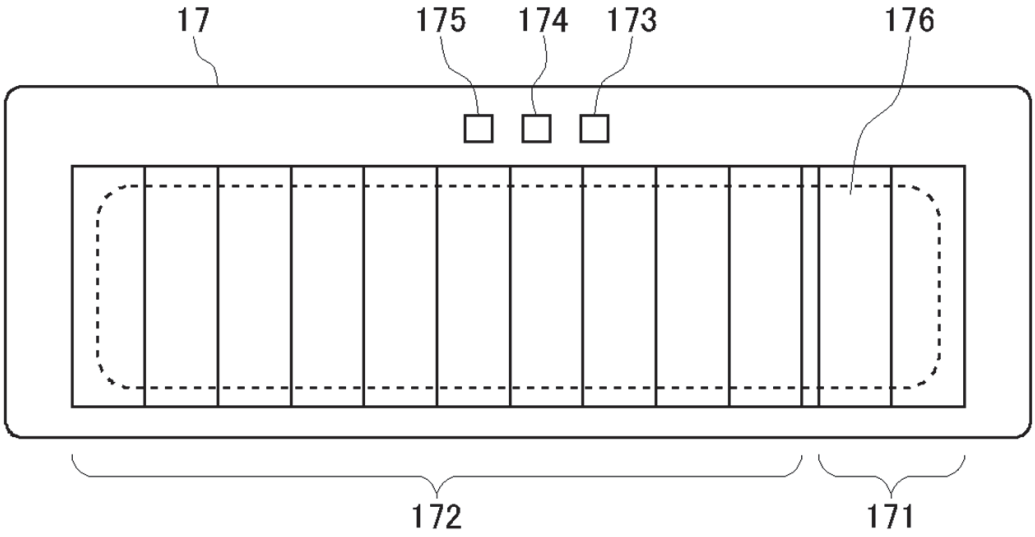

Fig. 30

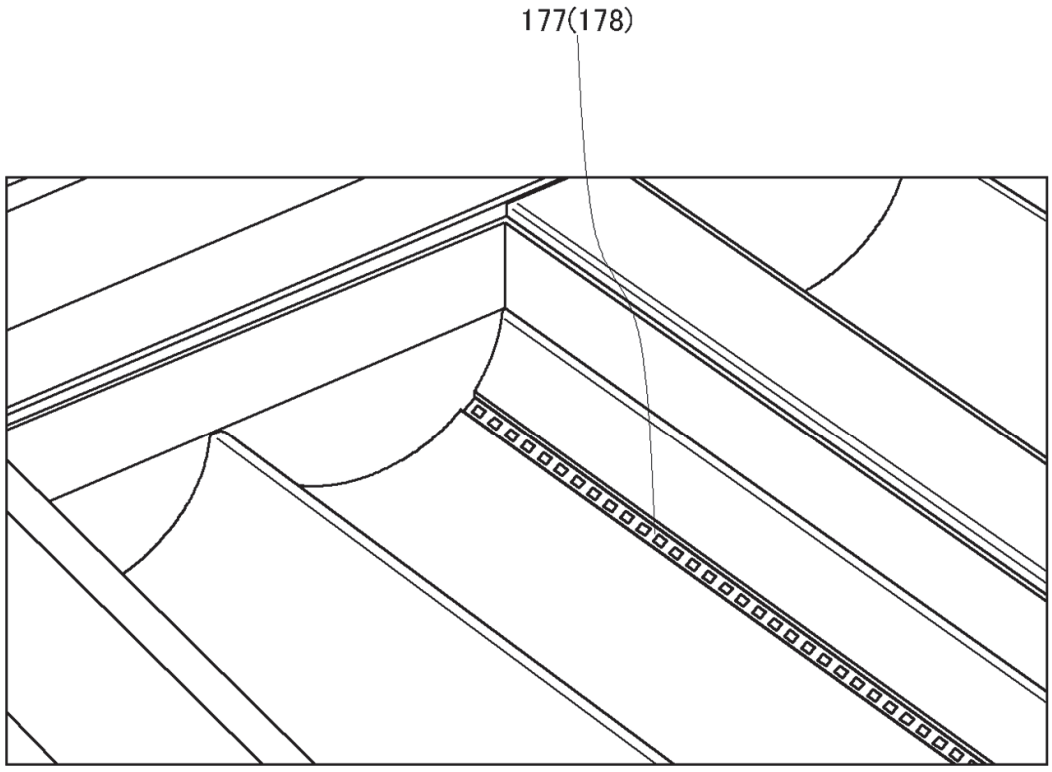

Fig. 31

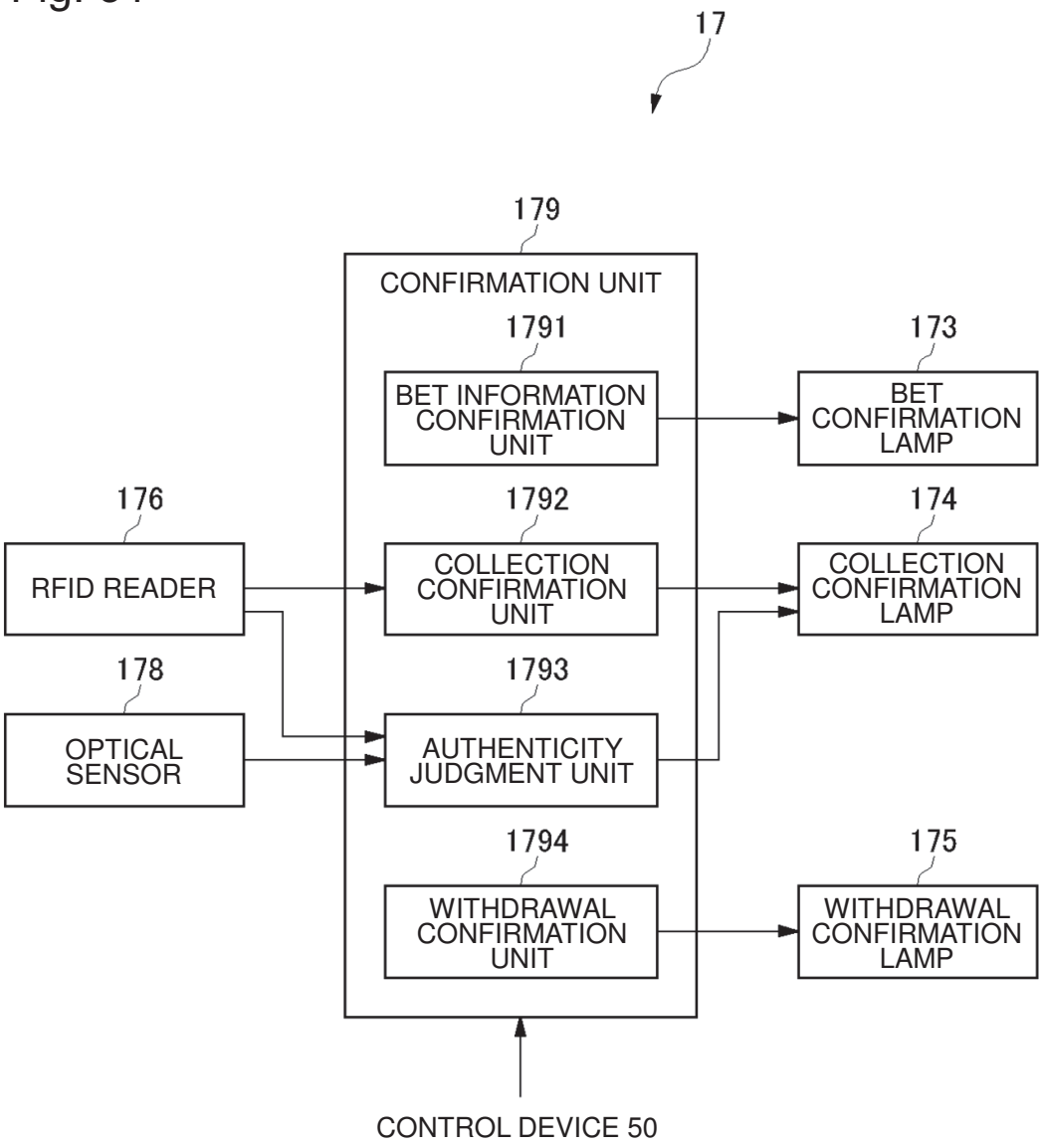
17
179
CONFIRMATION UNIT
1791
BET INFORMATION CONFIRMATION UNIT
173
BET CONFIRMATION LAMP
176
RFID READER
1792
COLLECTION CONFIRMATION UNIT
174
COLLECTION CONFIRMATION LAMP
178
OPTICAL SENSOR
1793
AUTHENTICITY JUDGMENT UNIT
1794
WITHDRAWAL CONFIRMATION UNIT
175
WITHDRAWAL CONFIRMATION LAMP
CONTROL DEVICE 50

Fig. 32

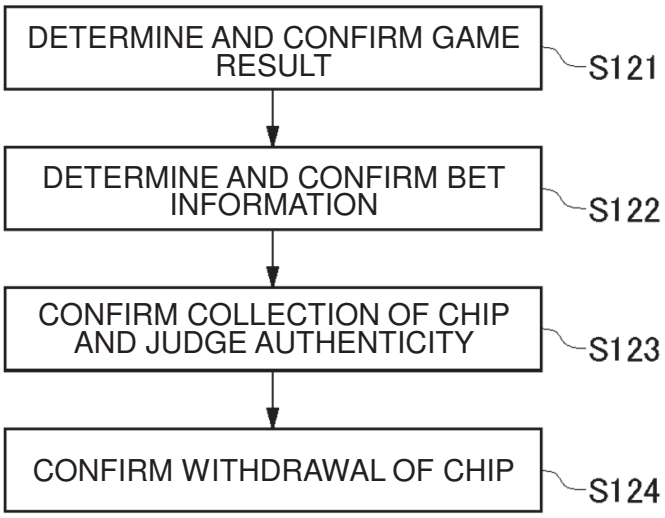
DETERMINE AND CONFIRM GAME RESULT
S121
DETERMINE AND CONFIRM BET INFORMATION
S122
CONFIRM COLLECTION OF CHIP AND JUDGE AUTHENTICITY
S123
CONFIRM WITHDRAWAL OF CHIP
S124

Fig. 33

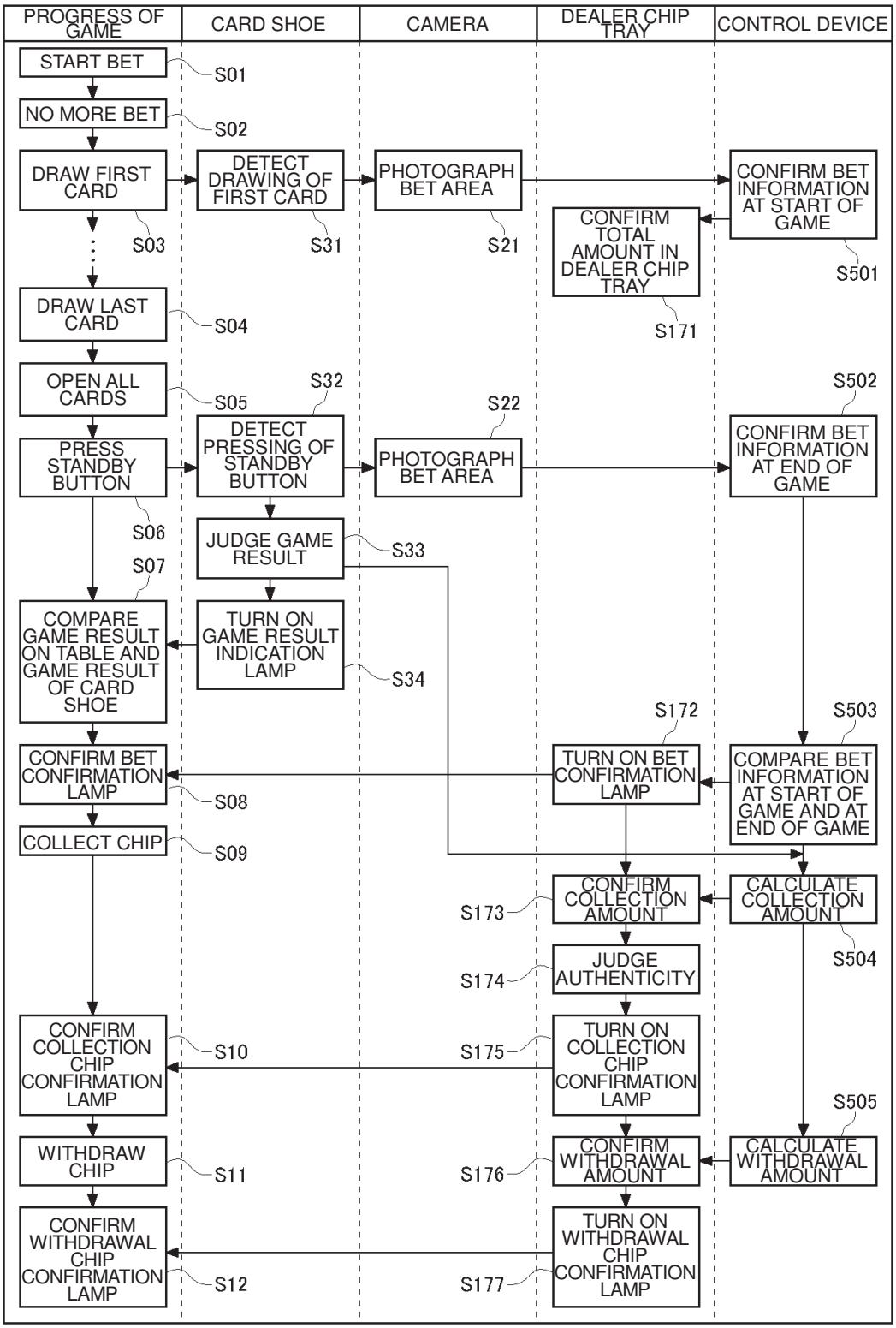
PROGRESS OF GAME
CARD SHOE
CAMERA
DEALER CHIP TRAY
CONTROL DEVICE
START BET
S01
NO MORE BET
S02
DRAW FIRST CARD
DETECT DRAWING OF FIRST CARD
PHOTOGRAPH BET AREA
CONFIRM BET INFORMATION AT START OF GAME
S03
S31
S21
CONFIRM TOTAL AMOUNT IN DEALER CHIP TRAY
S501
S171
DRAW LAST CARD
S04
OPEN ALL CARDS
S05
S32
S22
S502
PRESS STANDBY BUTTON
DETECT PRESSING OF STANDBY BUTTON
PHOTOGRAPH BET AREA
CONFIRM BET INFORMATION AT END OF GAME
S06
JUDGE GAME RESULT
S33
S07
COMPARE GAME RESULT ON TABLE AND GAME RESULT OF CARD SHOE
TURN ON GAME RESULT INDICATION LAMP
S34
S172
S503
CONFIRM BET CONFIRMATION LAMP
S08
TURN ON BET CONFIRMATION LAMP
COMPARE BET INFORMATION AT START OF GAME AND AT END OF GAME
COLLECT CHIP
S09
S173
CONFIRM COLLECTION AMOUNT
CALCULATE COLLECTION AMOUNT
S504
S174
JUDGE AUTHENTICITY
CONFIRM COLLECTION CHIP CONFIRMATION LAMP
S10
S175
TURN ON COLLECTION CHIP CONFIRMATION LAMP
S505
WITHDRAW CHIP
S11
S176
CONFIRM WITHDRAWAL AMOUNT
CALCULATE WITHDRAWAL AMOUNT
CONFIRM WITHDRAWAL CHIP CONFIRMATION LAMP
S12
S177
TURN ON WITHDRAWAL CHIP CONFIRMATION LAMP

Fig. 34

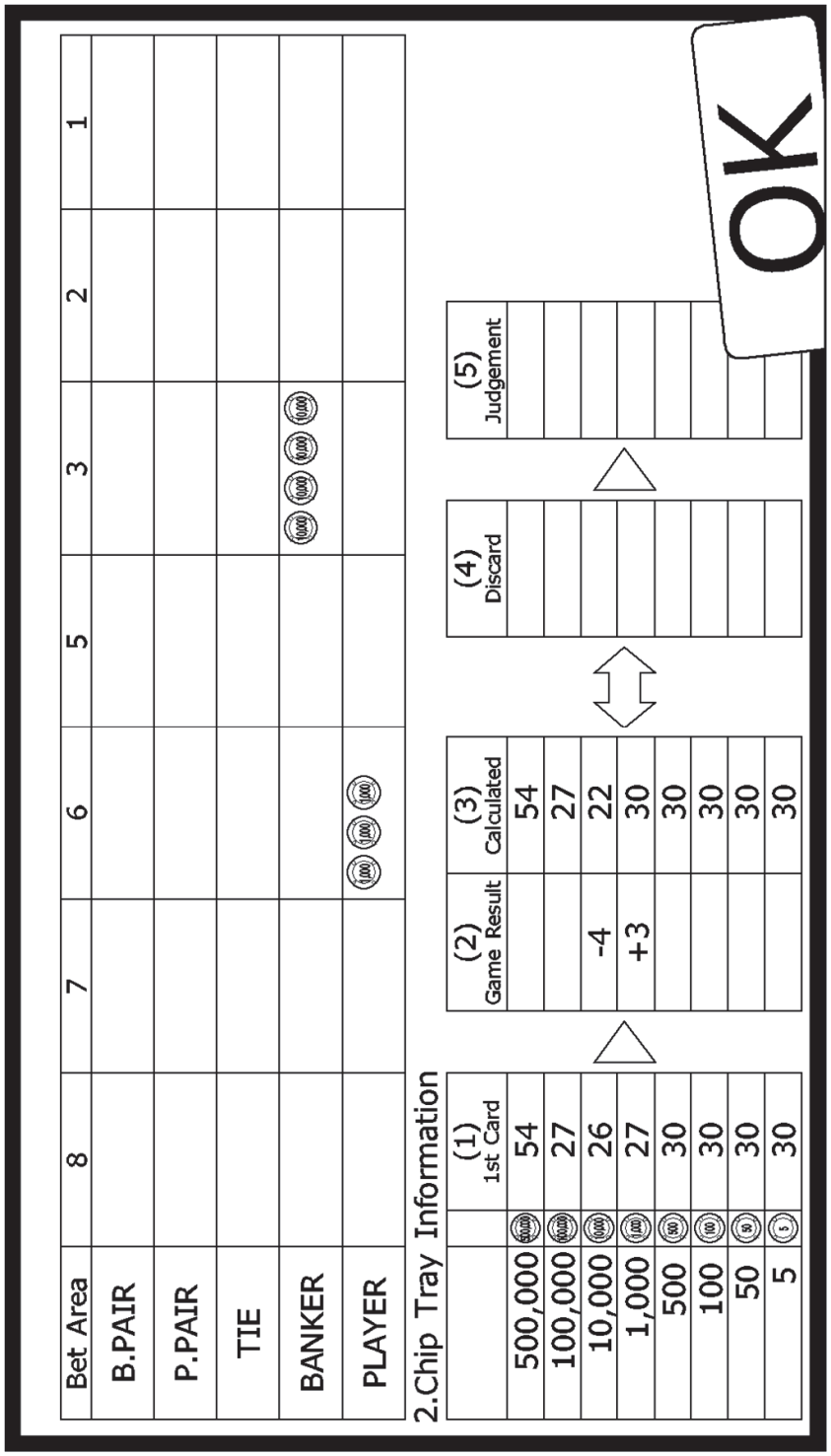
Bet Area
8
7
6
5
4
3
2
1
B.PAIR
P.PAIR
TIE
BANKER
PLAYER
2.Chip Tray Information
(1) 1st Card
(2) Game Result
(3) Calculated
(4) Discard
(5) Judgement
500,000
100,000
10,000
1,000
500
100
50
5
54
27
26
27
30
30
30
30
-4
+3
54
27
22
30
30
30
30
30
OK

Fig. 35

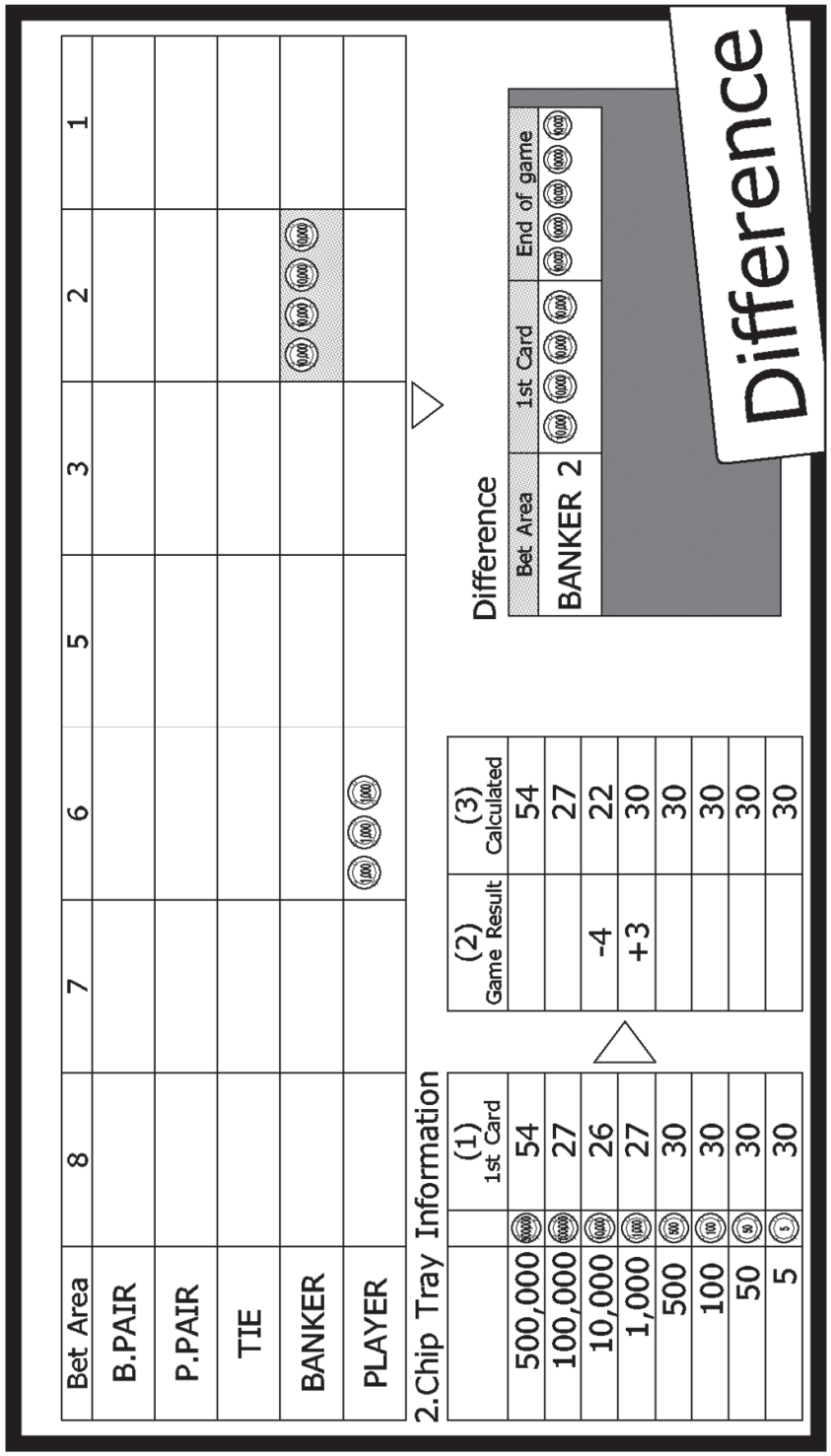
Bet Area
8
7
6
5
3
2
1
B.PAIR
P.PAIR
TIE
BANKER
PLAYER
2.Chip Tray Information
(1) 1st Card
(2) Game Result
(3) Calculated
500,000
100,000
10,000
1,000
500
100
50
5
54
27
26
27
30
30
30
30
54
27
22
30
30
30
30
30
-4
+3
Difference
Bet Area
1st Card
End of game
BANKER 2
Difference

Fig. 36

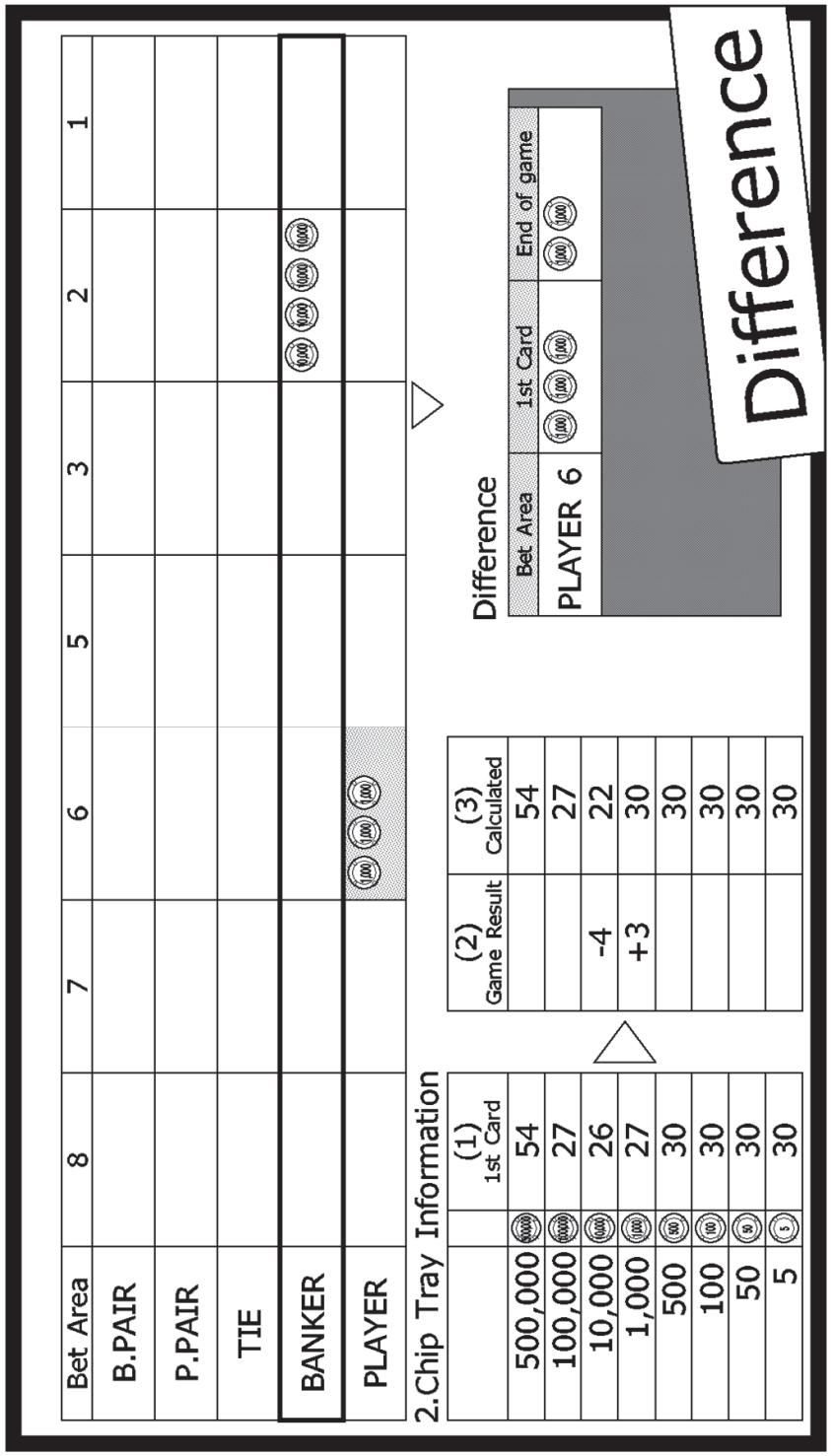
Bet Area
8
7
6
5
3
2
1
B.PAIR
P.PAIR
TIE
BANKER
PLAYER
2.Chip Tray Information
(1) 1st Card
(2) Game Result
(3) Calculated
500,000
100,000
10,000
1,000
500
100
50
5
54
27
26
27
30
30
30
30
54
27
22
30
30
30
30
30
-4
+3
Difference
Bet Area
1st Card
End of game
PLAYER 6
Difference

Fig. 37

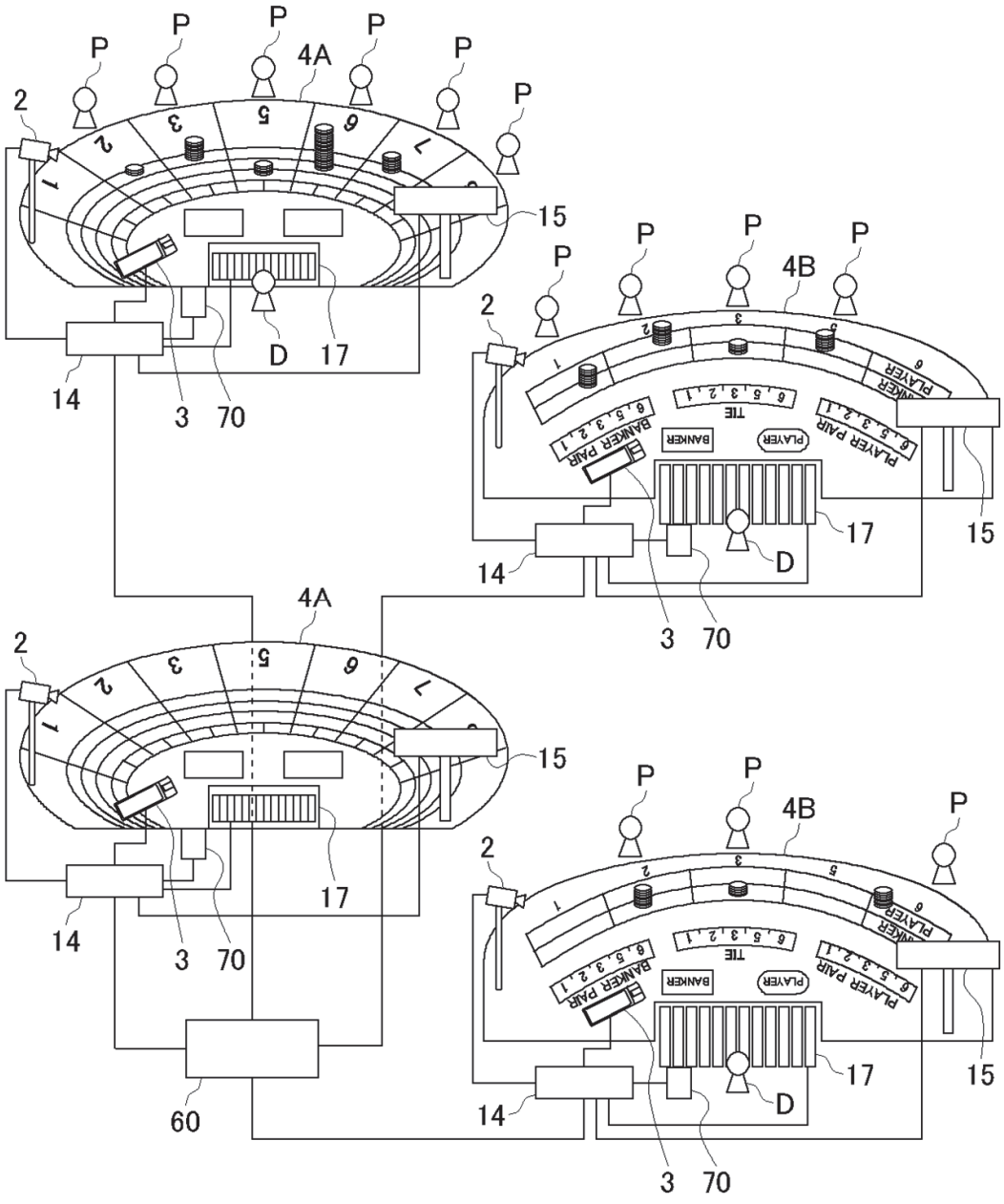
P
4A
4B
2
15
D
17
14
3
70
60
BANKER
PLAYER
TIE
BANKER PAIR
PLAYER PAIR

Fig. 38

DATA AND TIME	2018/3/14 20:38													
TABLE ID	T0001													
LAYOUT	Type-a													
MINIMUM BET AMOUNT	$100													
DEALER ID	D0001													
BET TIME	'46													
GAMING TIME	1'03													
CHIP COLLECTION TIME	'16													
CHIP WITHDRAWAL TIME	'42													
GAME RESULT	PLAYER													
START DEALER CHIP AMOUNT	5,825,410													
POST-LIQUIDATION DEALER CHIP AMOUNT	5,825,660													
VERIFICATION RESULT	OK													
POSITION	1		2		3		5		6		7		8	
MEMBER ID	-		P0001		-		P0002		P0003		P0004		-	
BET AMOUNT	100,000	-	100,000	0	100,000	-	100,000	0	100,000	0	100,000	0	100,000	-
	10,000	-	10,000	0	10,000	-	10,000	0	10,000	0	10,000	0	10,000	-
	1,000	-	1,000	0	1,000	-	1,000	0	1,000	0	1,000	0	1,000	-
	100	-	100	1	100	-	100	0	100	3	100	2	100	-
	10	-	10	5	10	-	10	0	10	0	10	0	10	-
BET TARGET	-		BANKER		-		-		BANKER		PLAYER		-	
WITHDRAWAL (-) /COLLECTION (+)	-		+150		-		0		+300		-200		-	
SALES	650													
NET PROFIT	+250													

Fig. 39

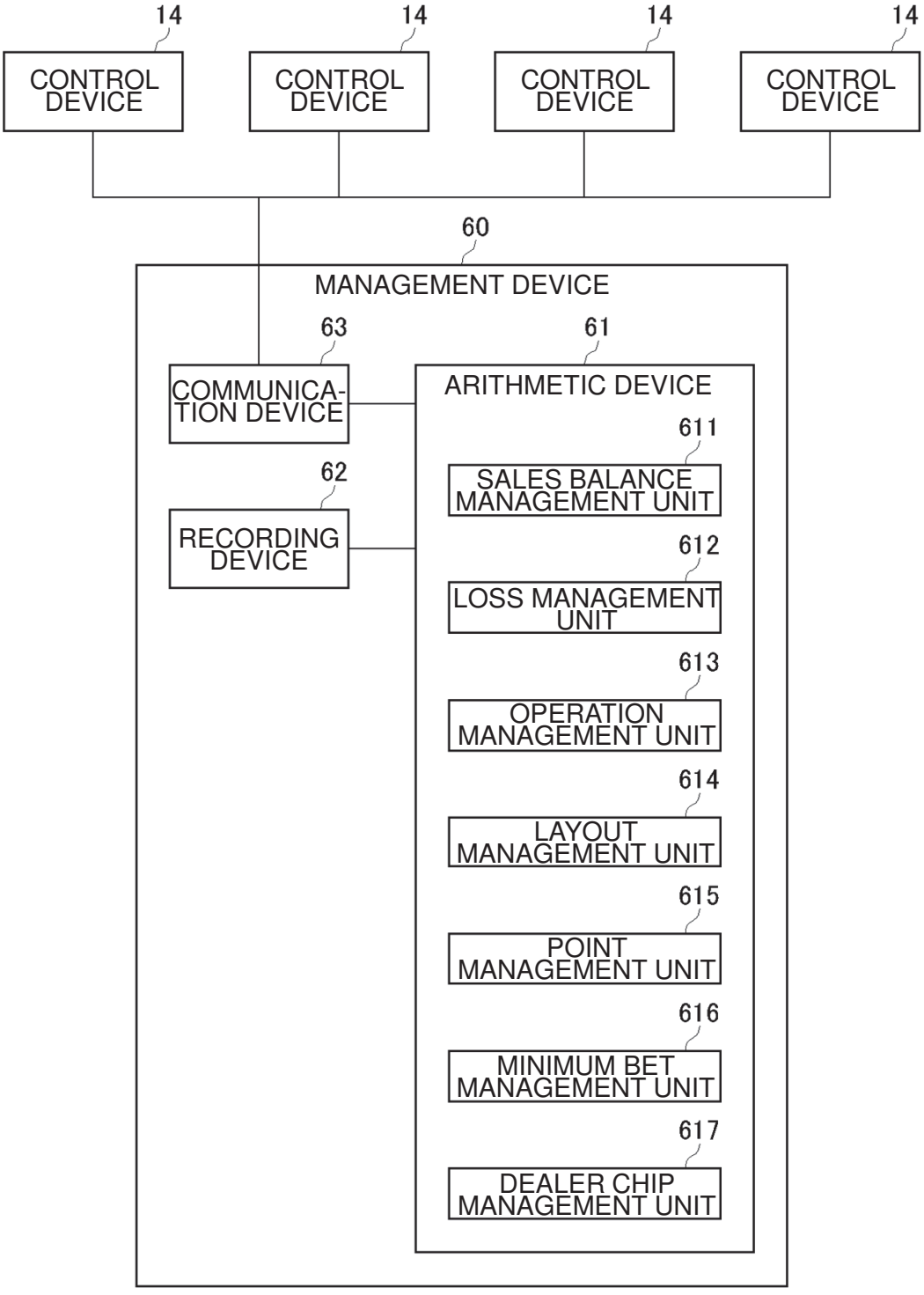
14
CONTROL DEVICE
14
CONTROL DEVICE
14
CONTROL DEVICE
14
CONTROL DEVICE
60
MANAGEMENT DEVICE
63
COMMUNICA-TION DEVICE
62
RECORDING DEVICE
61
ARITHMETIC DEVICE
611
SALES BALANCE MANAGEMENT UNIT
612
LOSS MANAGEMENT UNIT
613
OPERATION MANAGEMENT UNIT
614
LAYOUT MANAGEMENT UNIT
615
POINT MANAGEMENT UNIT
616
MINIMUM BET MANAGEMENT UNIT
617
DEALER CHIP MANAGEMENT UNIT

Fig. 40

Chip Count in Chip Tray for Each Table

15-Mar-18

Table No.	Chip Count								Total Amount
	$100,000	$50,000	$10,000	$5,000	$1,000	$500	$100	$25	
1	4	10	37	43	62	70	85	26	$1,591,150
2	5	11	35	20	89	67	82	23	$1,631,275
3	5	12	36	36	56	66	52	36	$1,735,100
4	2	7	49	45	78	65	61	31	$1,382,375
5	3	15	36	18	52	63	70	25	$1,591,125
6	4	10	44	41	80	60	80	38	$1,663,950
7	6	5	34	26	51	66	77	42	$1,412,750
.	.	.	.	.	.	.	.	.	.
.	.	.	.	.	.	.	.	.	.
.	.	.	.	.	.	.	.	.	.
73	36	24	50	20	12	27	31	18	$5,429,050
74	47	20	28	21	46	21	40	12	$6,145,800
75	4	5	30	20	66	68	80	27	$1,158,675
Total	311	750	2,904	2,454	5,014	4,896	5,432	2,368	$117,939,900

Fig. 41

Profit

15-Mar-18

Table No.	Total Bet Amount	Gross Profit	Profit Ratio
1	$1,700,200	$42,505	2.5%
2	$1,460,400	$58,416	4.0%
3	$1,050,500	-$21,010	-2.0%
4	$1,650,700	$39,617	2.4%
5	$968,000	$32,912	3.4%
6	$1,104,200	$16,563	1.5%
7	$1,458,500	$90,427	6.2%
.	.	.	.
.	.	.	.
.	.	.	.
75	$1,755,425	$43,886	3.3%
Total	$100,633,929	$3,019,018	3.0%

Fig. 42

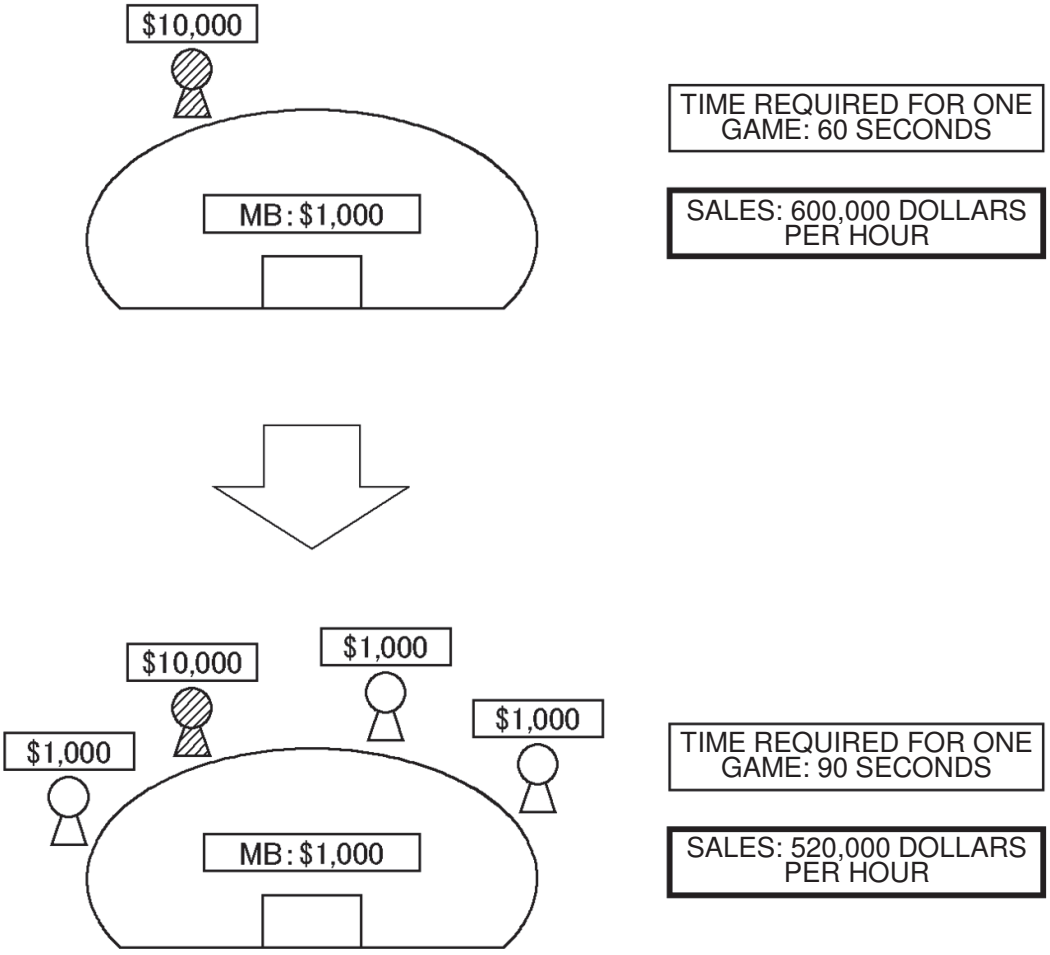
$10,000
MB: $1,000
TIME REQUIRED FOR ONE GAME: 60 SECONDS
SALES: 600,000 DOLLARS PER HOUR
$10,000
$1,000
$1,000
$1,000
MB: $1,000
TIME REQUIRED FOR ONE GAME: 90 SECONDS
SALES: 520,000 DOLLARS PER HOUR

Fig. 43A

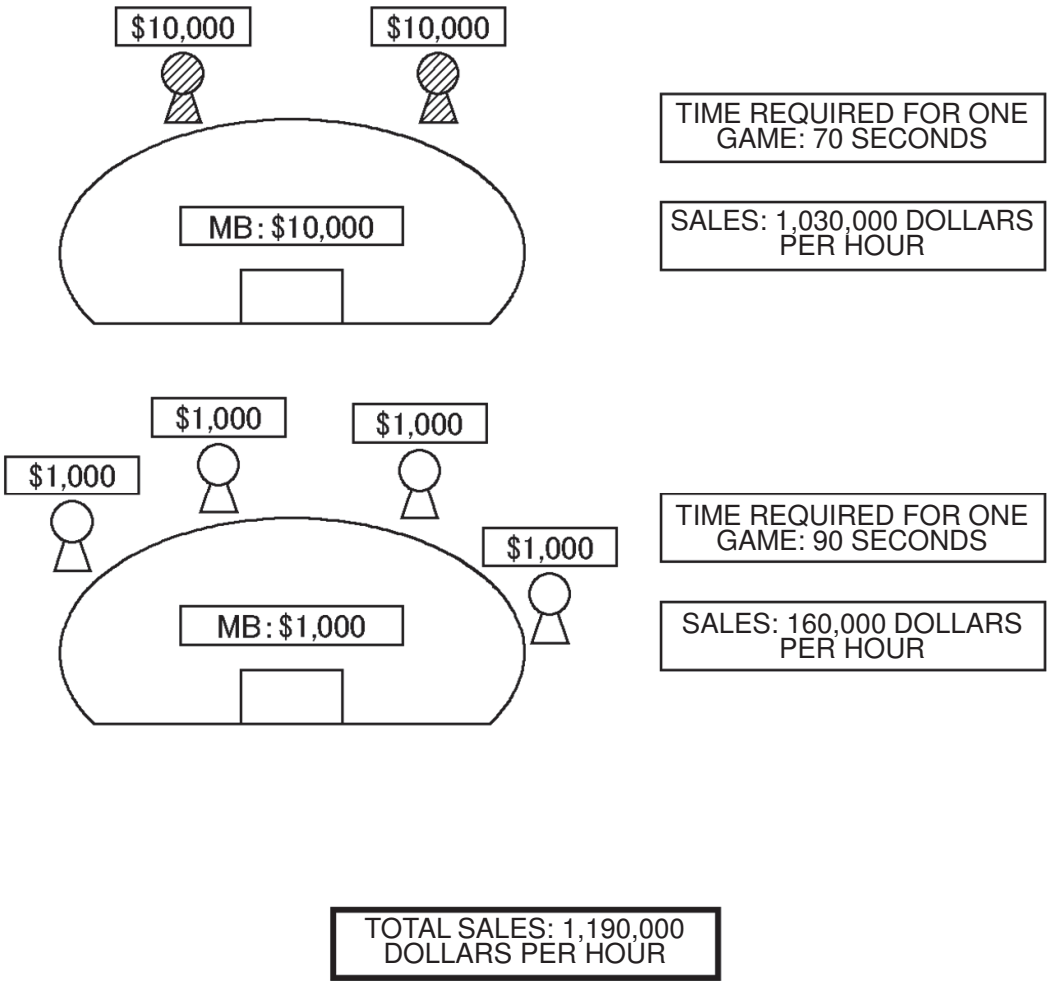
$10,000
$10,000
MB: $10,000
TIME REQUIRED FOR ONE GAME: 70 SECONDS
SALES: 1,030,000 DOLLARS PER HOUR
$1,000
$1,000
$1,000
$1,000
MB: $1,000
TIME REQUIRED FOR ONE GAME: 90 SECONDS
SALES: 160,000 DOLLARS PER HOUR
TOTAL SALES: 1,190,000 DOLLARS PER HOUR

Fig. 43B

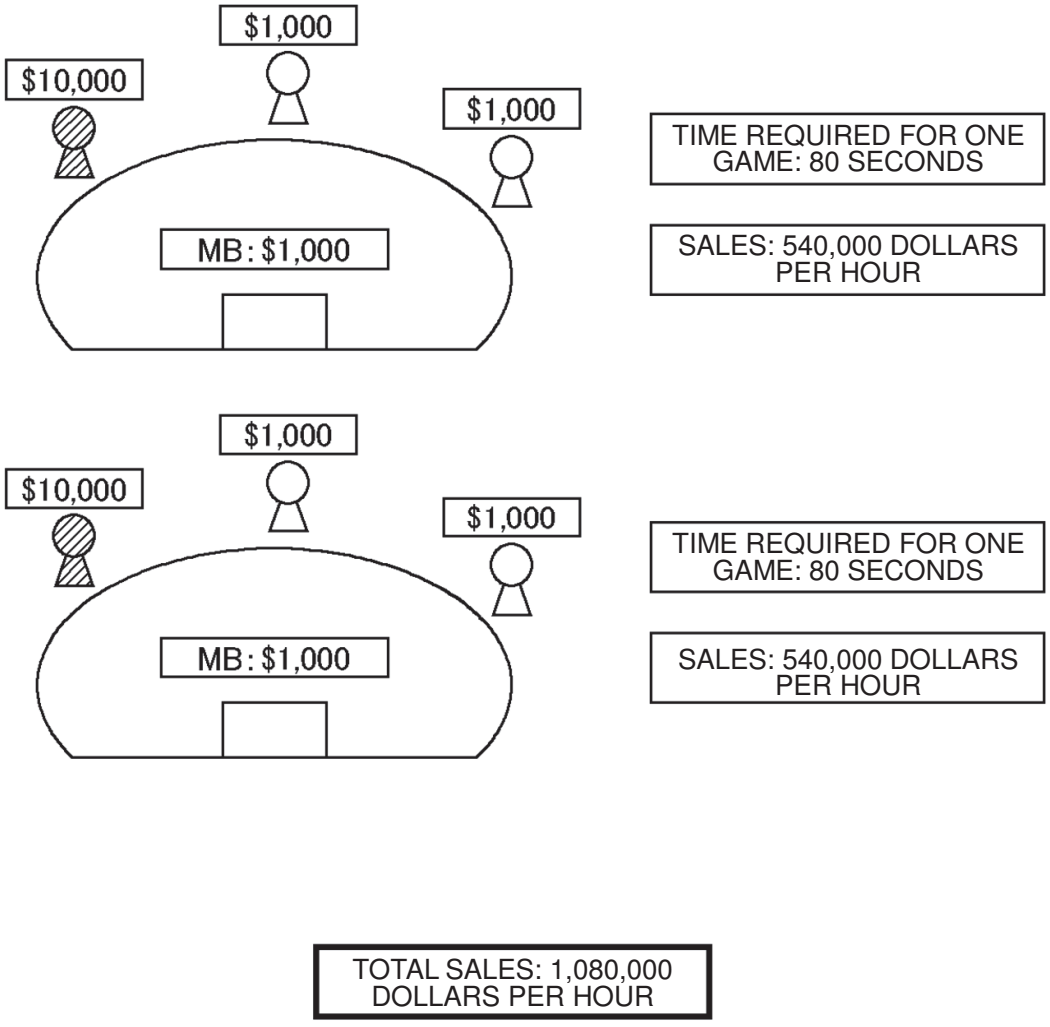
$1,000
$10,000
$1,000
MB: $1,000
TIME REQUIRED FOR ONE GAME: 80 SECONDS
SALES: 540,000 DOLLARS PER HOUR
$1,000
$10,000
$1,000
MB: $1,000
TIME REQUIRED FOR ONE GAME: 80 SECONDS
SALES: 540,000 DOLLARS PER HOUR
TOTAL SALES: 1,080,000 DOLLARS PER HOUR

Fig. 44A

	PLAYER 1	PLAYER 2	PLAYER 3	PLAYER 4
1	$1,000	$3,000	$2,000	$1,000
2	$1,200	$3,000	$1,500	$1,500
3	$2,000	$2,000	$1,800	$1,000
4	$1,000	$3,500	$2,300	$1,300
5	$1,500	$2,300	$1,800	$1,000
	↓	↓	↓	↓
MINIMUM AMOUNT	$1,000	$2,000	$1,500	$1,000
	LOW AMOUNT	HIGH AMOUNT	HIGH AMOUNT	LOW AMOUNT

Fig. 44B

	PLAYER 1	PLAYER 2	PLAYER 3	PLAYER 4
1	$1,000	$1,500	$2,000	$1,300
2	$1,200	$2,000	$1,000	$1,500
3	$2,000	$2,000	$1,500	$1,100
4	$1,000	$3,000	$1,300	$1,300
5	$1,500	$1,500	$1,800	$1,200
	↓	↓	↓	↓
MINIMUM AMOUNT	$1,000	$1,500	$1,000	$1,100
	LOW AMOUNT	HIGH AMOUNT	LOW AMOUNT	LOW AMOUNT

Fig. 45A

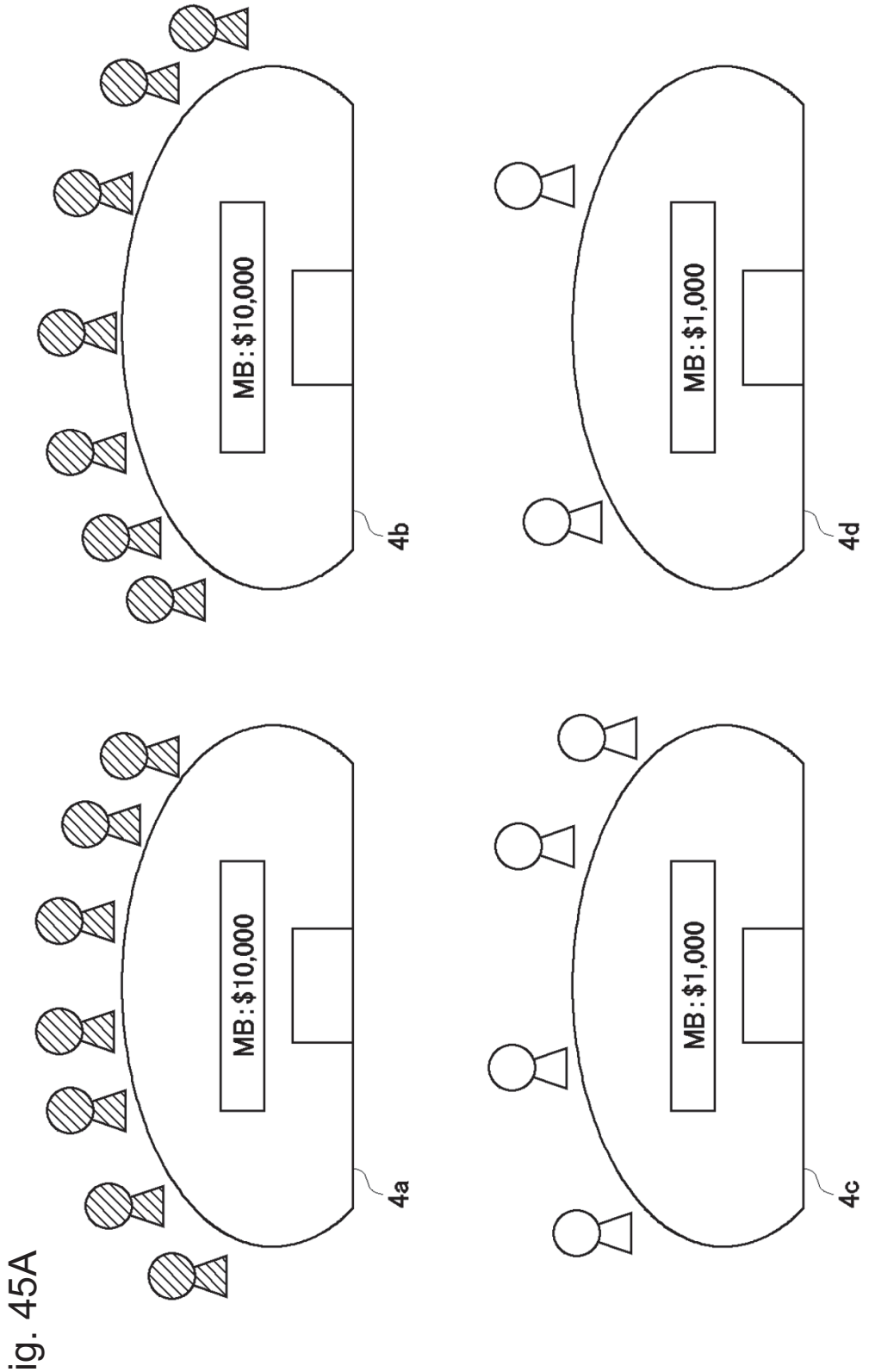

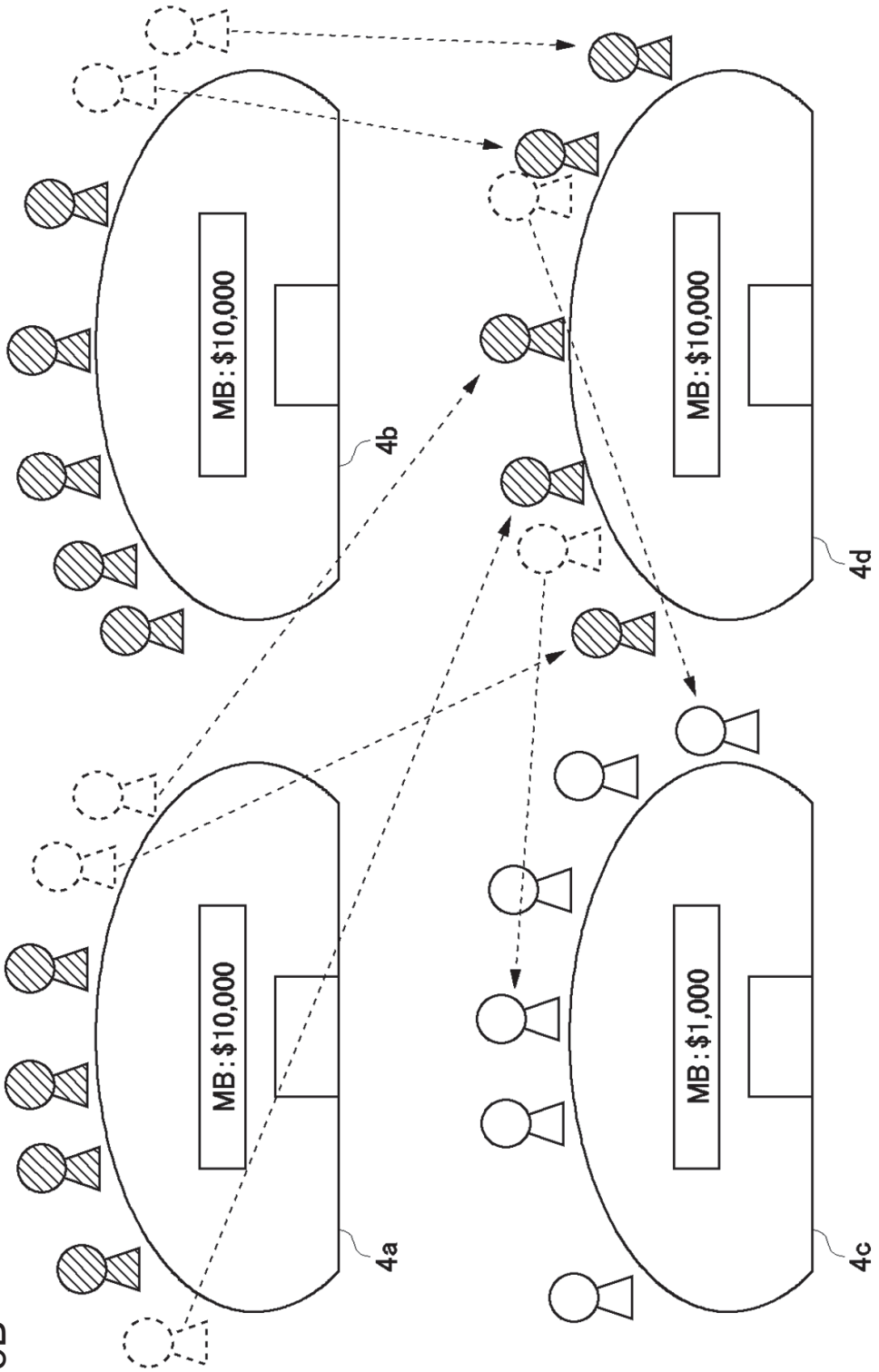

Fig. 45B

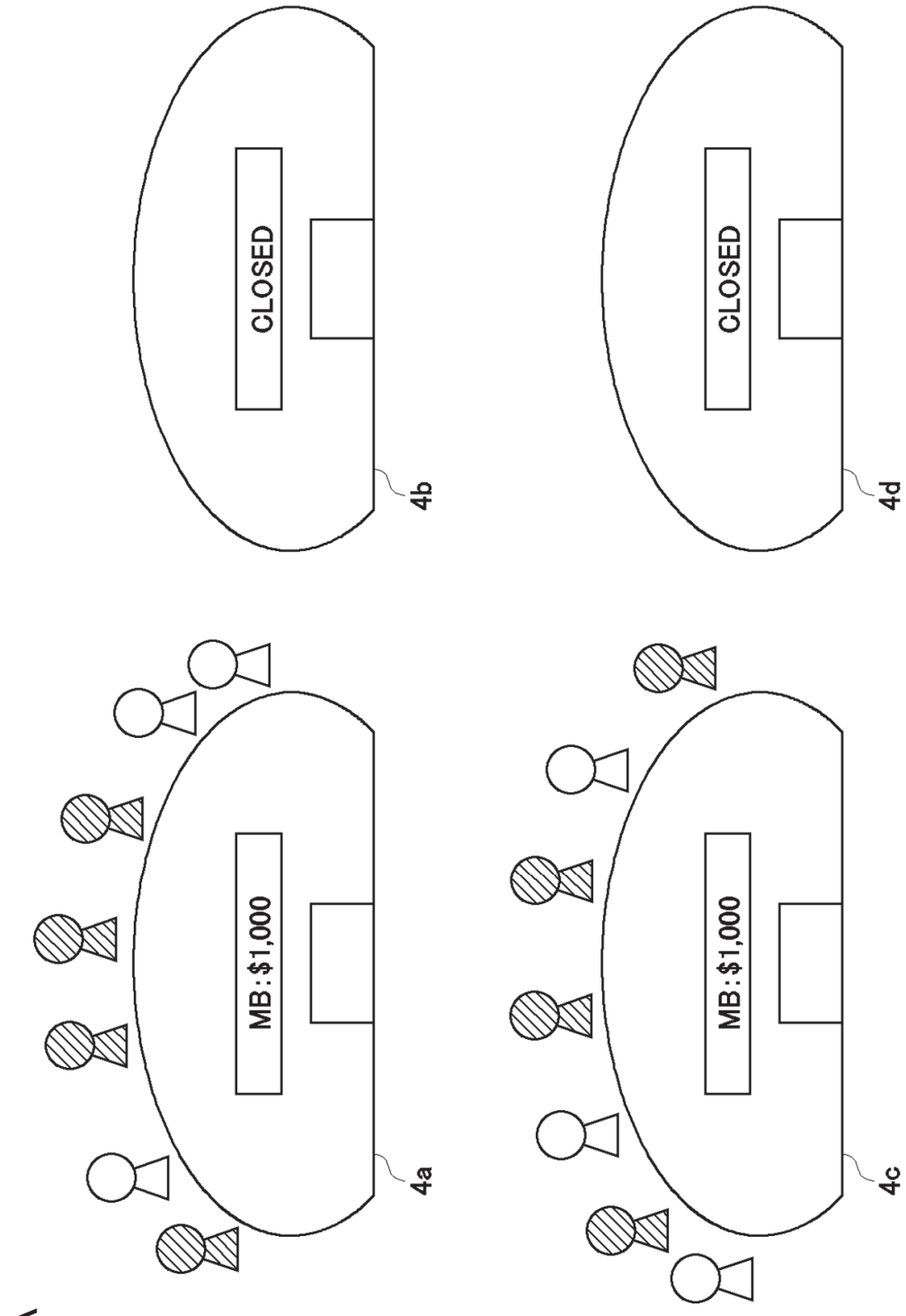

Fig. 46A

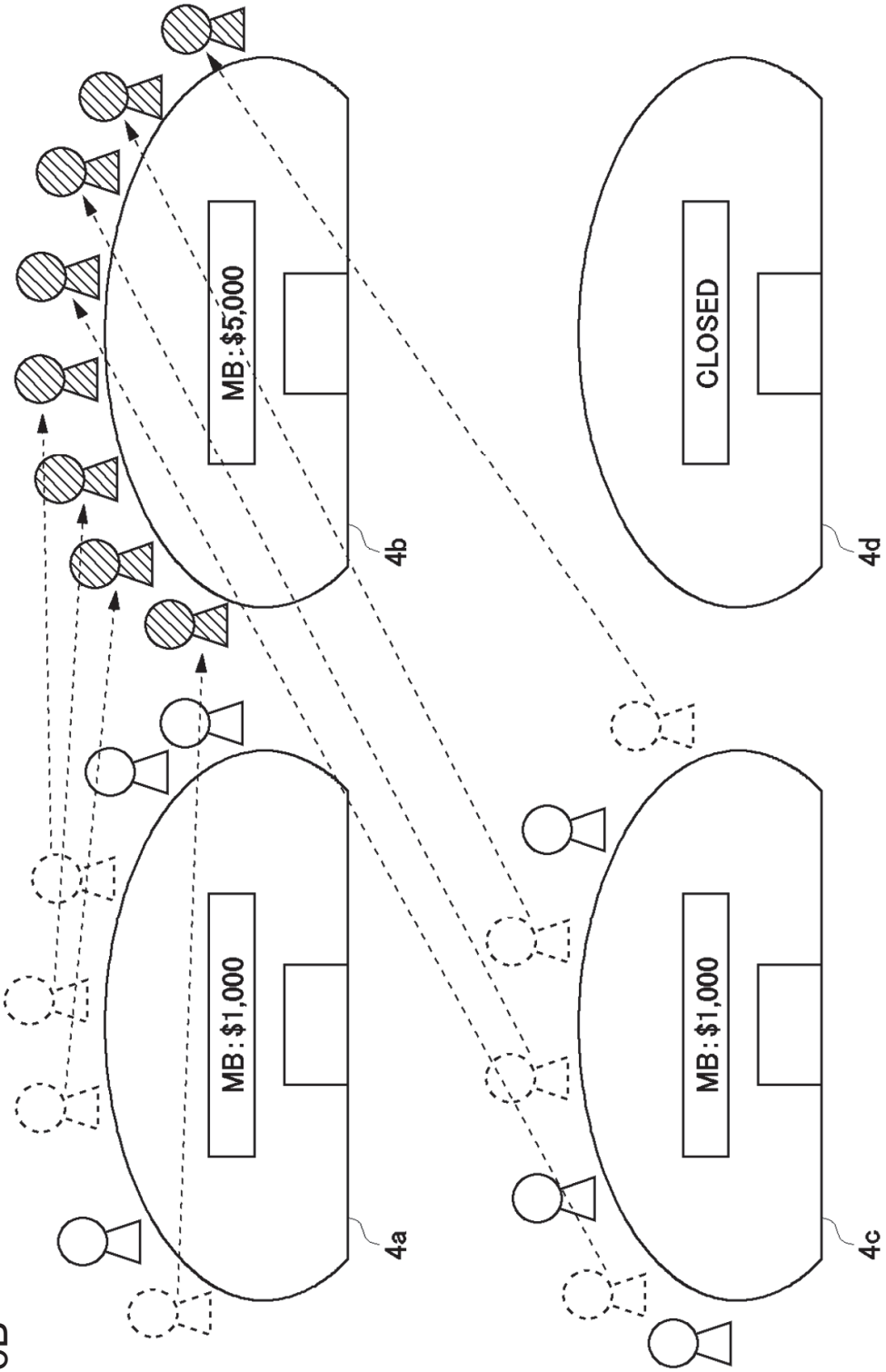

Fig. 46B

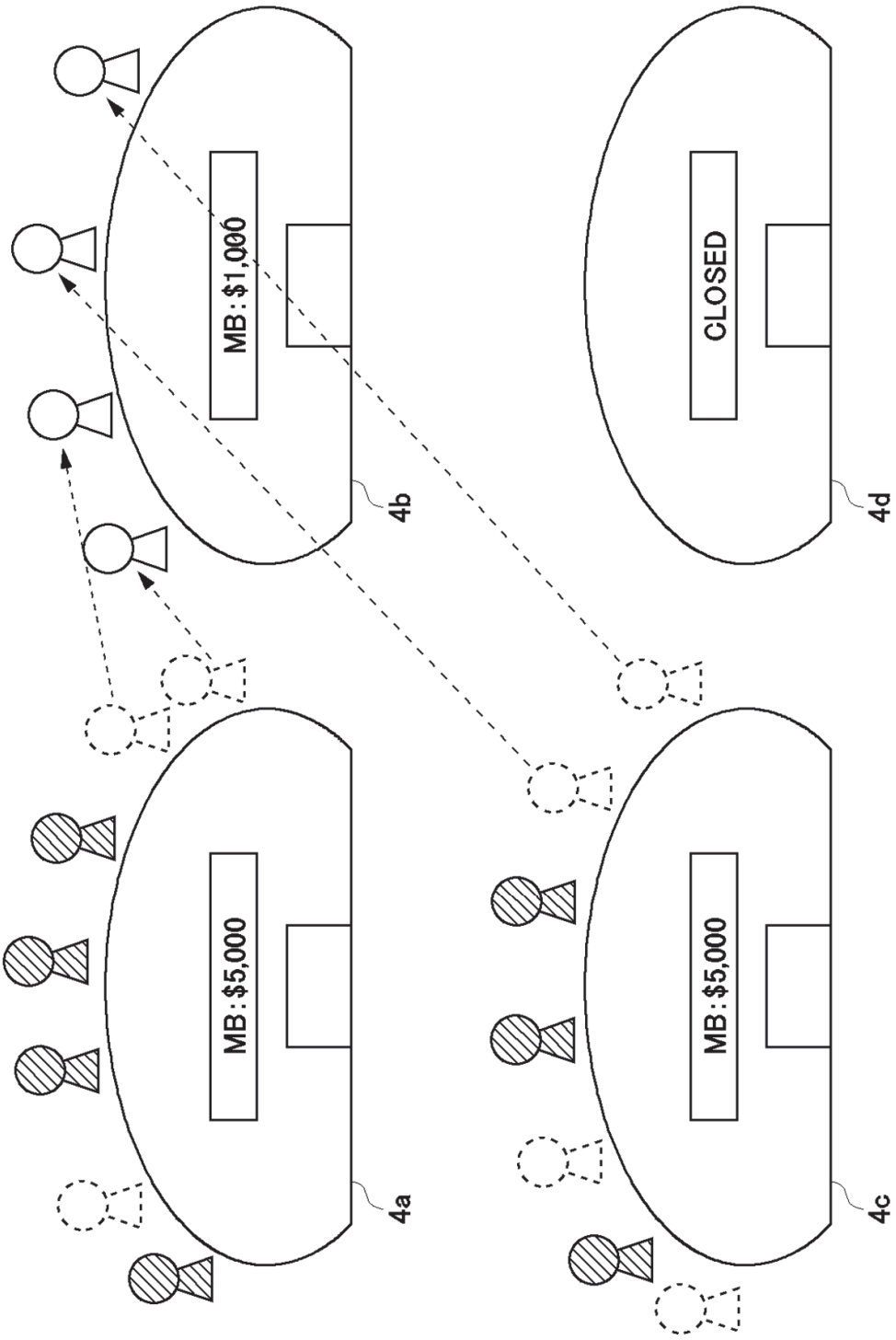

Fig. 46C