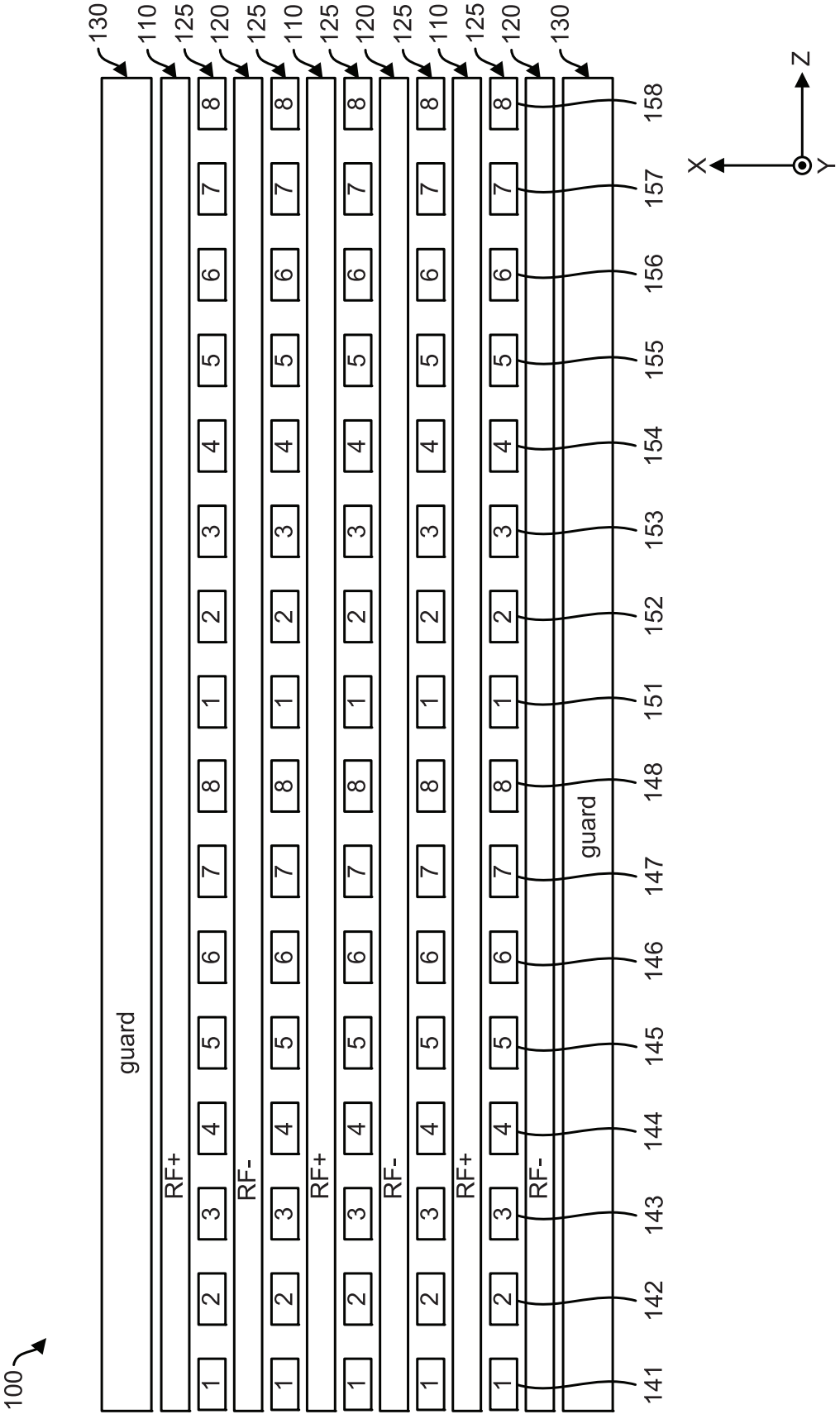
100
guard
RF+
RF-
RF+
RF-
RF+
RF-
guard
130
110
125
120
125
110
125
120
125
110
125
120
130
1
2
3
4
5
6
7
8
141
142
143
144
145
146
147
148
151
152
153
154
155
156
157
158
X
Y
Z

FIG. 1

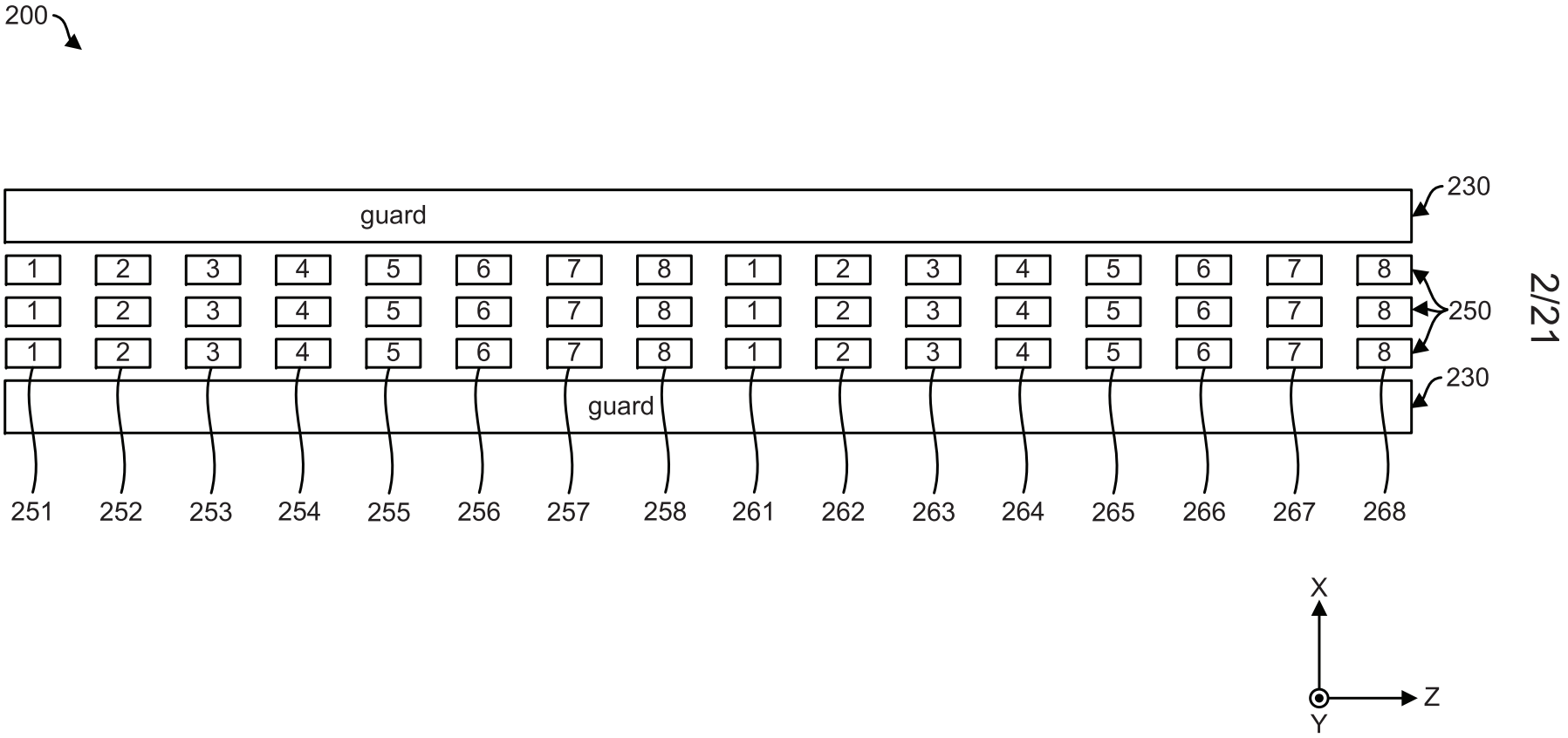
200
guard
230
1 2 3 4 5 6 7 8 1 2 3 4 5 6 7 8
1 2 3 4 5 6 7 8 1 2 3 4 5 6 7 8
1 2 3 4 5 6 7 8 1 2 3 4 5 6 7 8
250
guard
230
251 252 253 254 255 256 257 258 261 262 263 264 265 266 267 268
X
Z
Y

FIG. 2

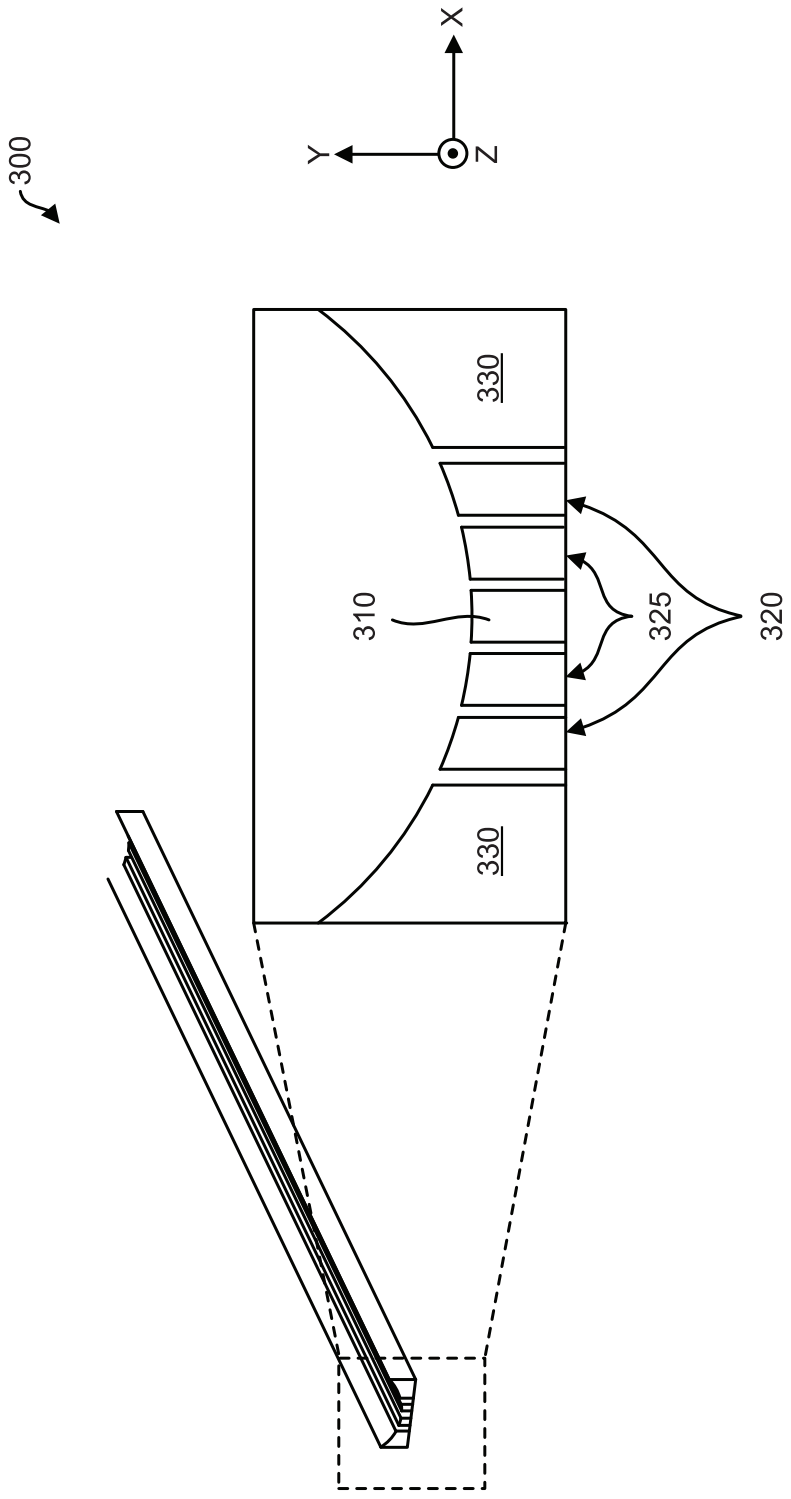

FIG. 3

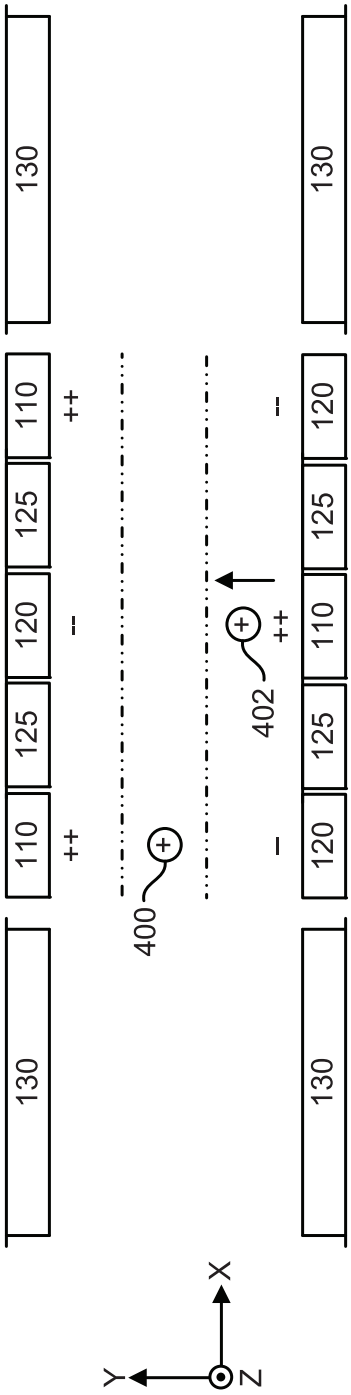
130
110
125
120
125
110
130
++
--
400
402
--
++
130
120
125
110
125
120
130

FIG. 4A

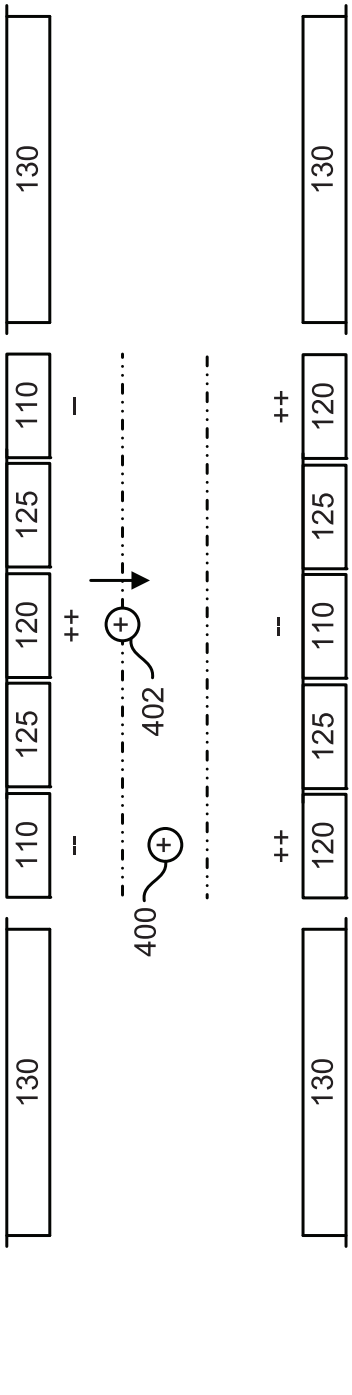
130
110
125
120
125
110
130
--
++
400
402
++
--
130
120
125
110
125
120
130

FIG. 4B

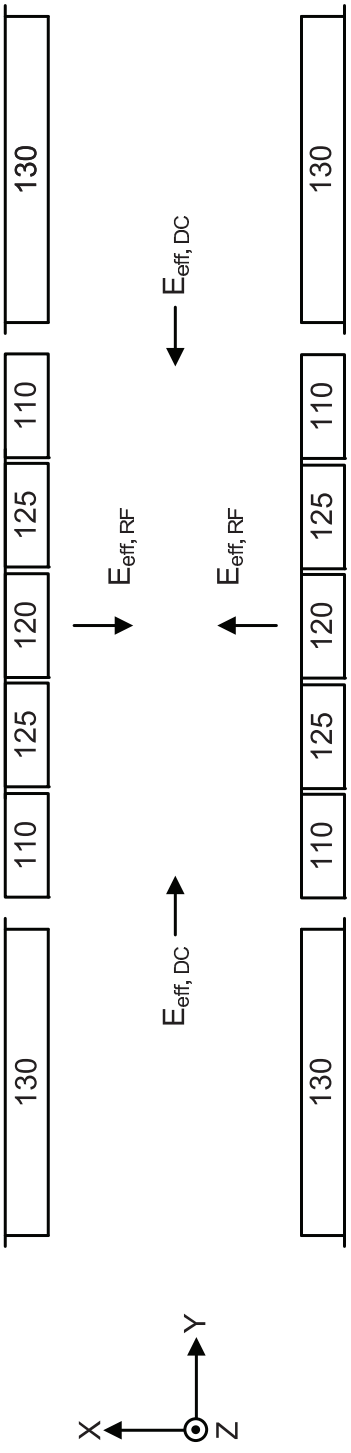
130
110
125
120
125
110
130
$E_{eff, DC}$
$E_{eff, RF}$
$E_{eff, RF}$
$E_{eff, DC}$
130
110
125
120
125
110
130
Y
X
Z

FIG. 4C

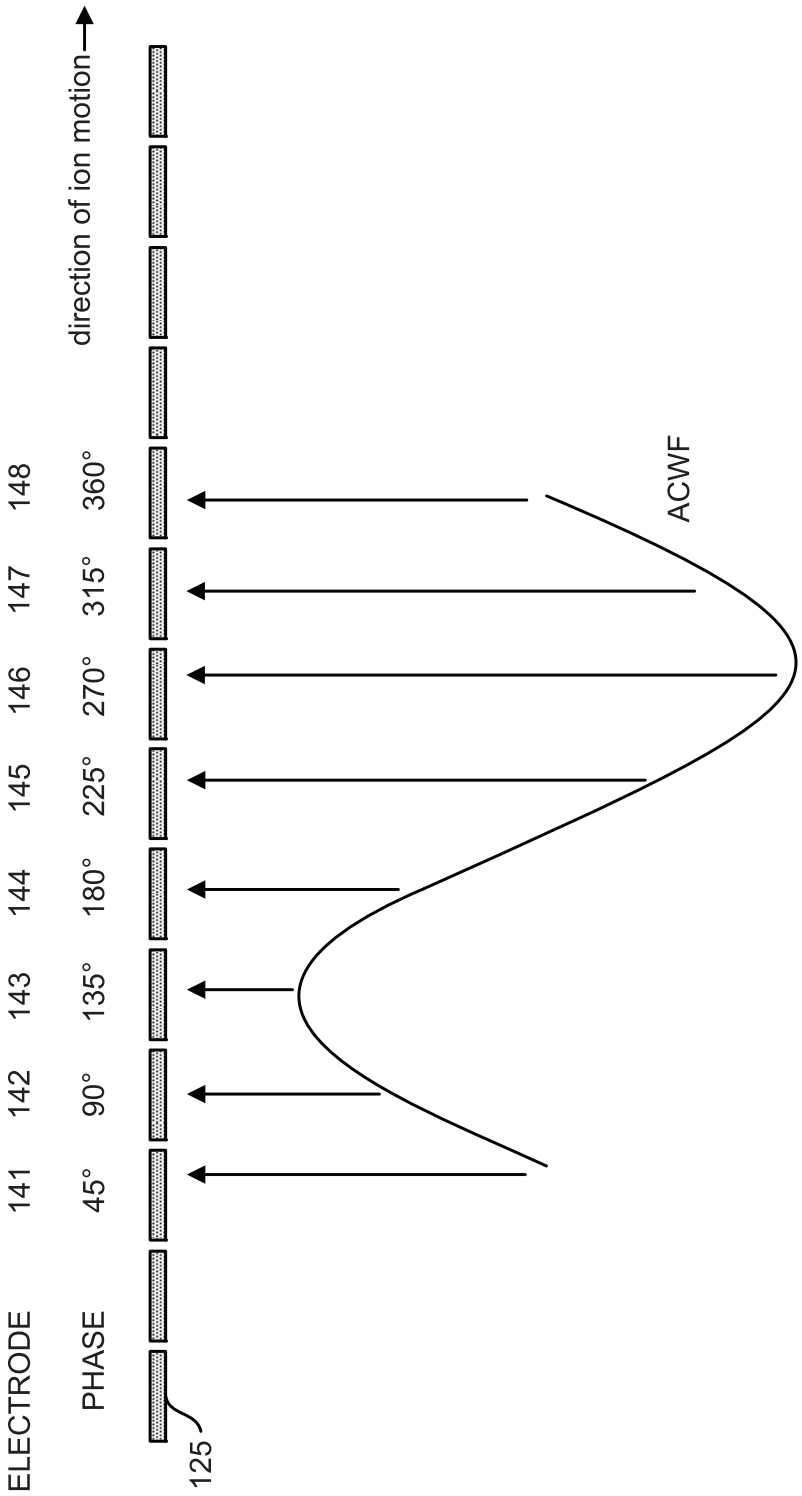
direction of ion motion
ELECTRODE
PHASE
141
45°
142
90°
143
135°
144
180°
145
225°
146
270°
147
315°
148
360°
125
ACWF

FIG. 5

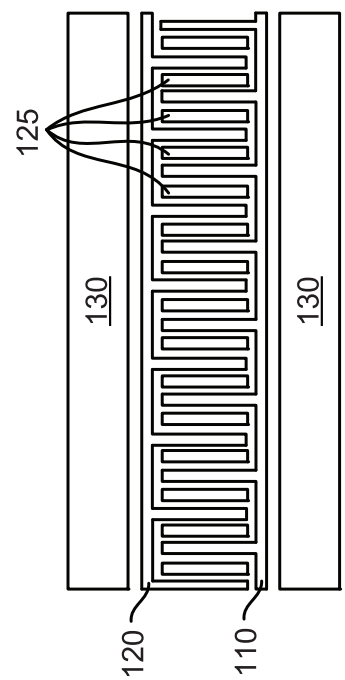

FIG. 6B

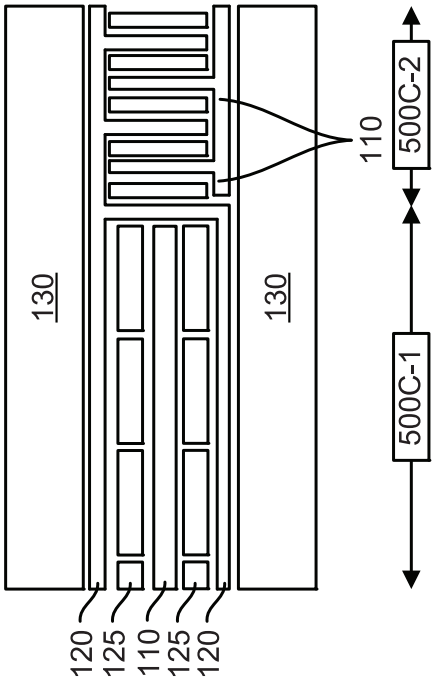

FIG. 6C

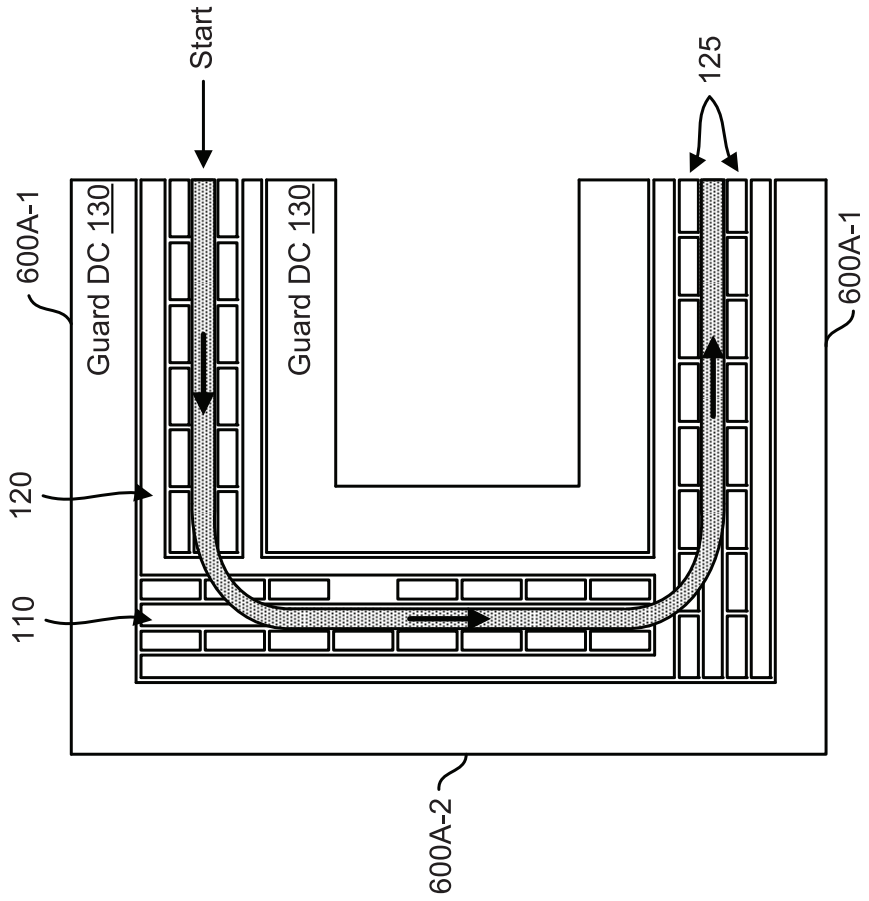

FIG. 6A

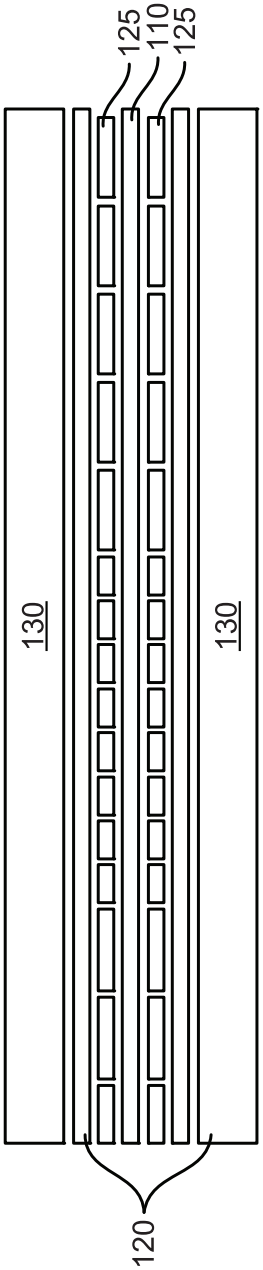
125
110
125
130
130
120

FIG. 6D

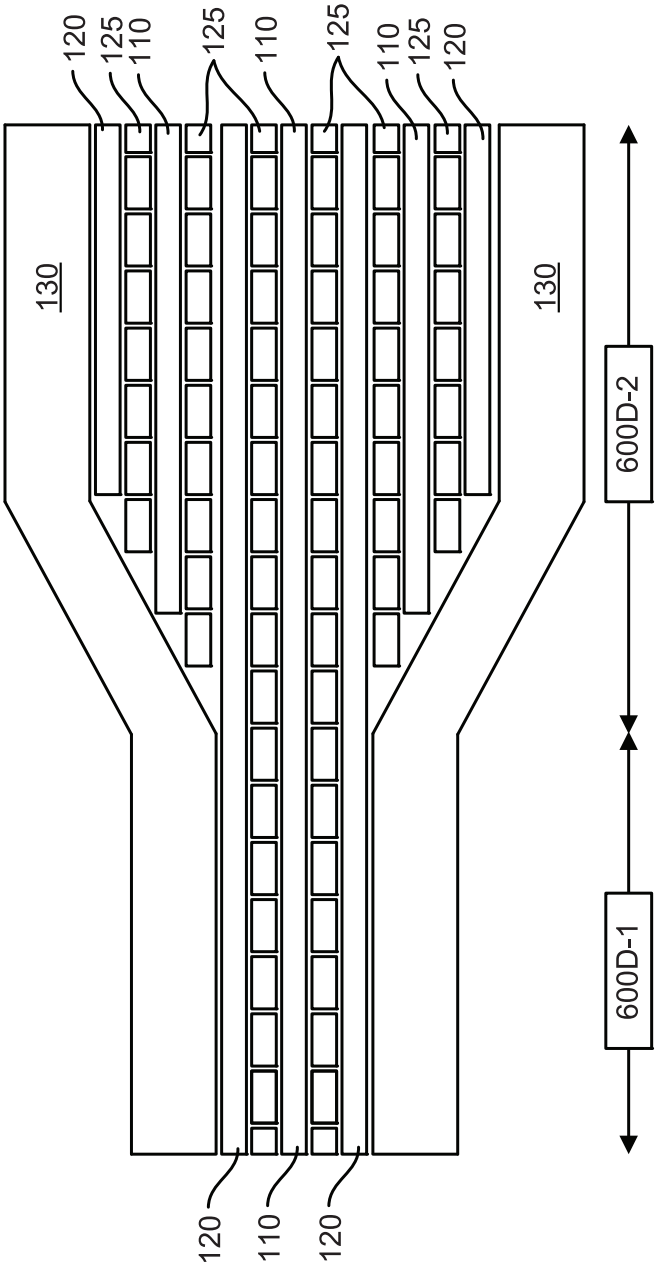
120
125
110
125
110
125
110
125
120
130
130
120
110
120
600D-2
600D-1

FIG. 6E

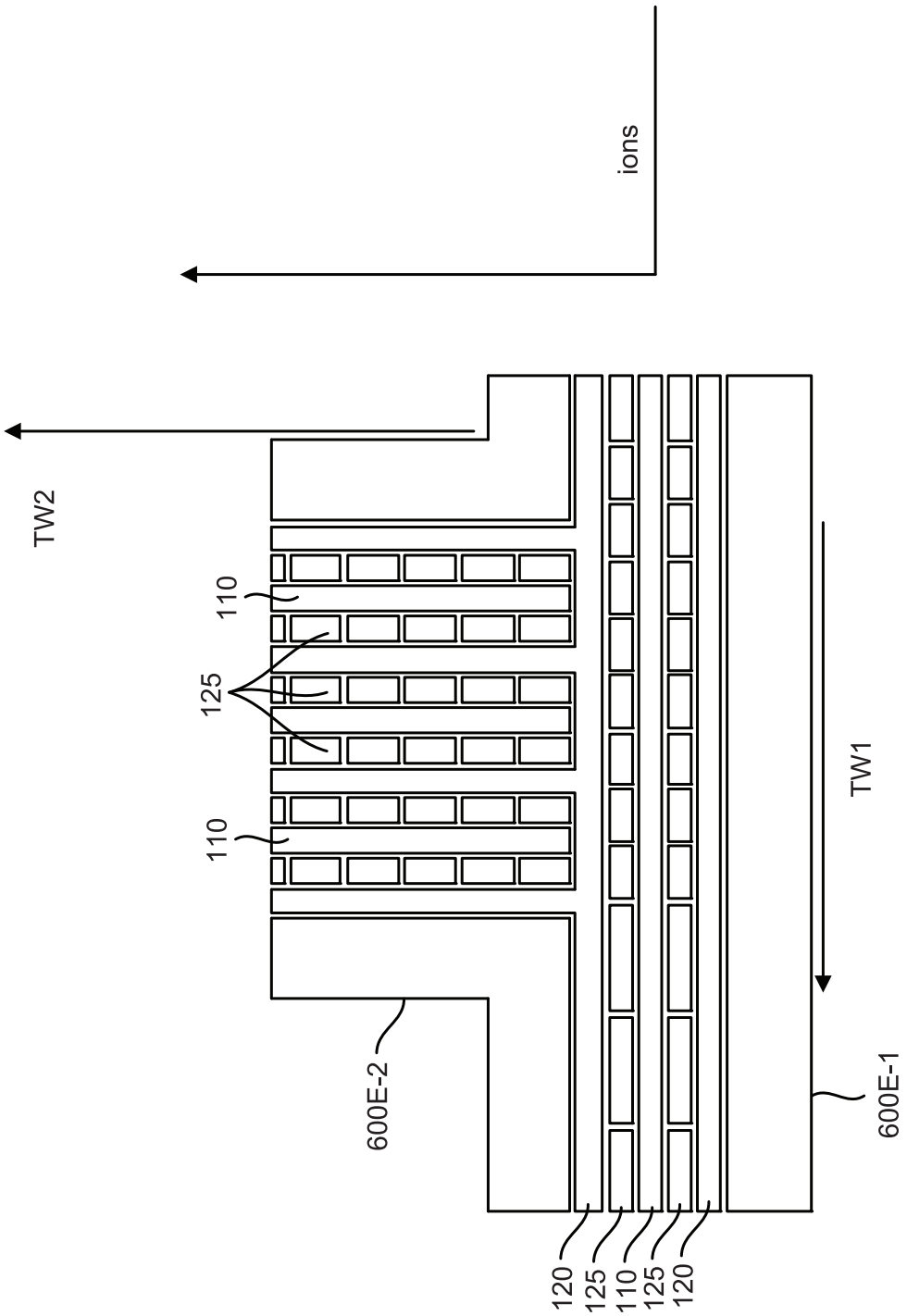

FIG. 6F

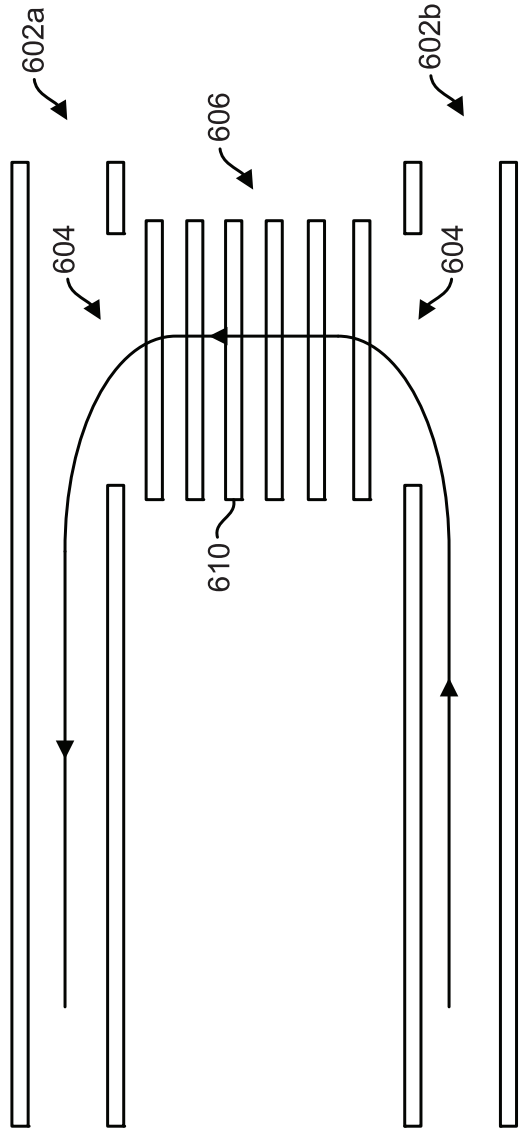
602a
602b
606
604
604
610

FIG. 6G

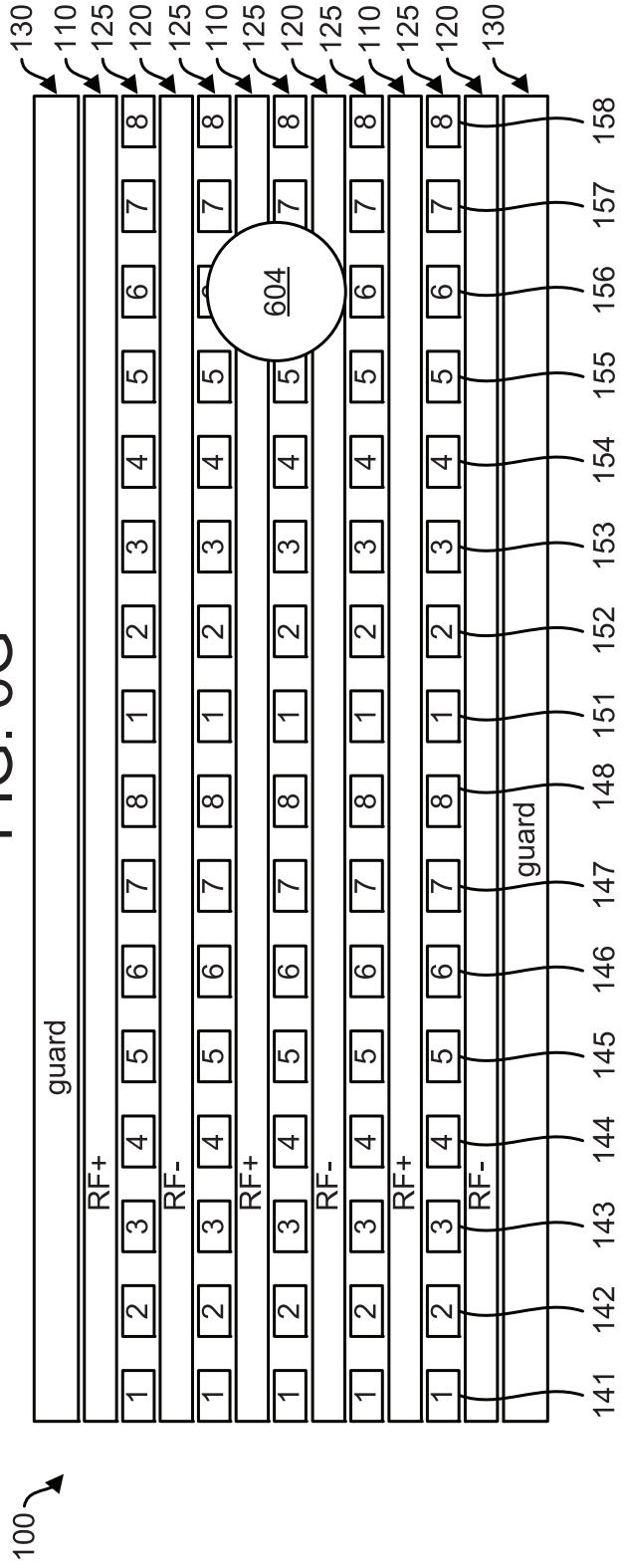
100
guard
RF+
RF-
RF+
RF-
RF+
RF-
guard
604
130
110
125
120
125
110
125
120
125
110
125
120
130
141
142
143
144
145
146
147
148
151
152
153
154
155
156
157
158

FIG. 6H

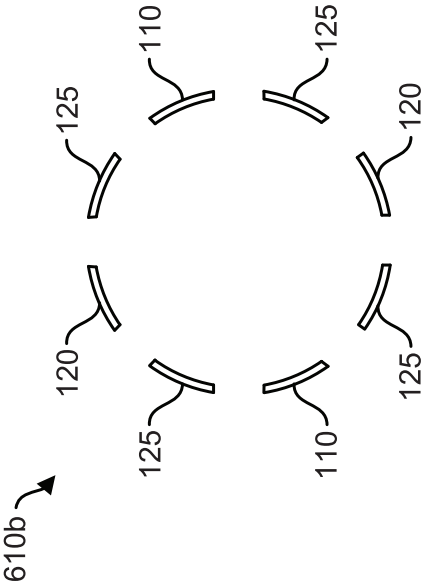
610b
125
120
125
110
110
125
125
120

FIG. 6J

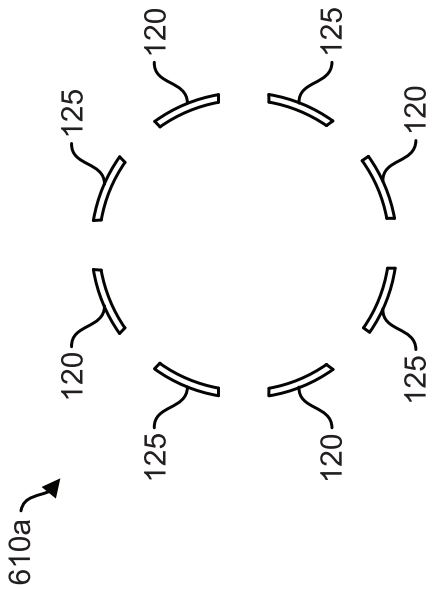
610a
125
120
125
120
120
125
125
120

FIG. 6I

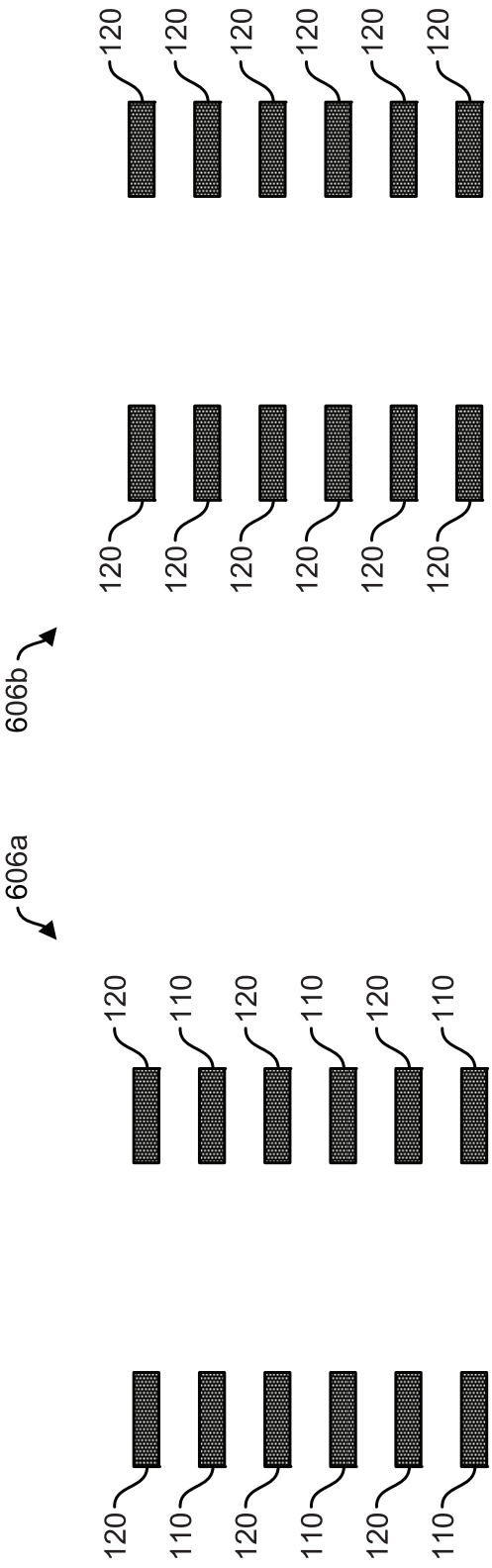
606a
120
110
120
110
120
110
120
110
120
110
120
110

FIG. 6K

606b
120
120
120
120
120
120
120
120
120
120
120
120

FIG. 6L

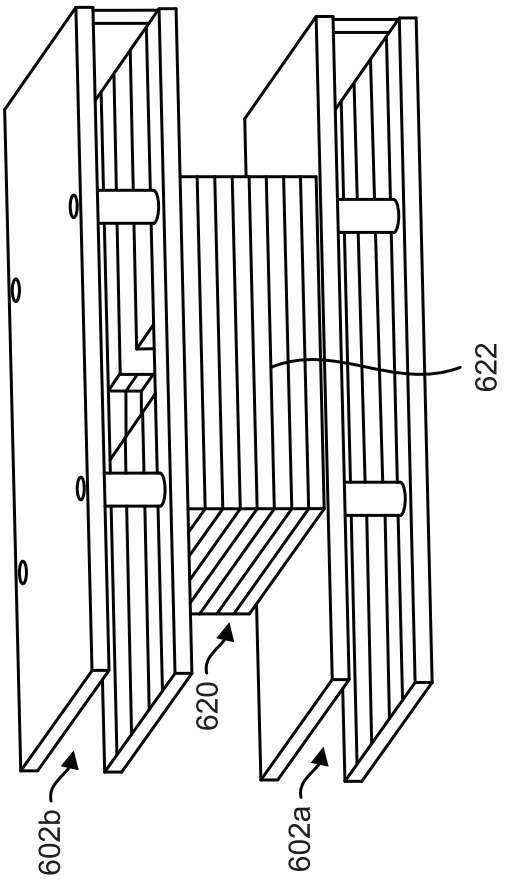

FIG. 6M

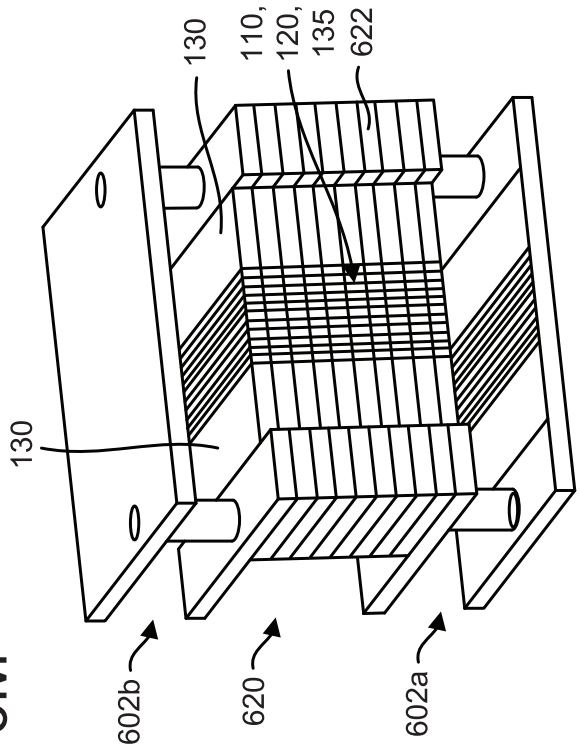

FIG. 6O

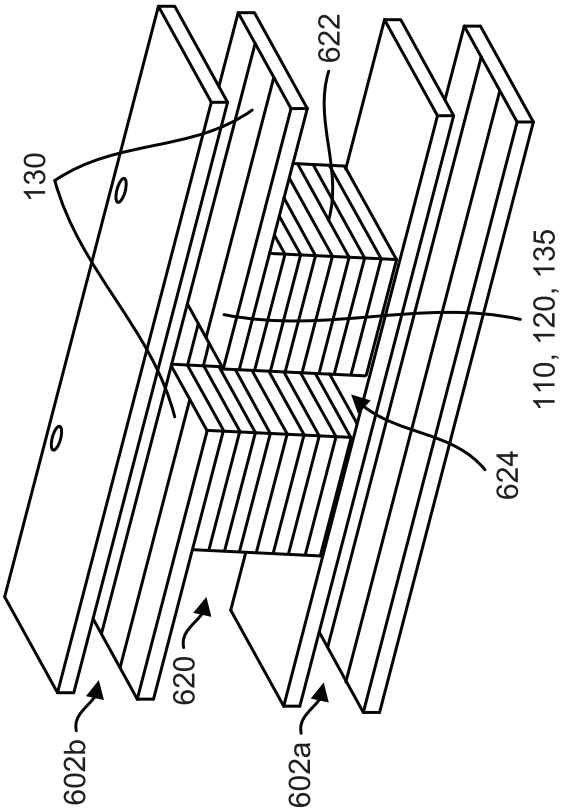

FIG. 6N

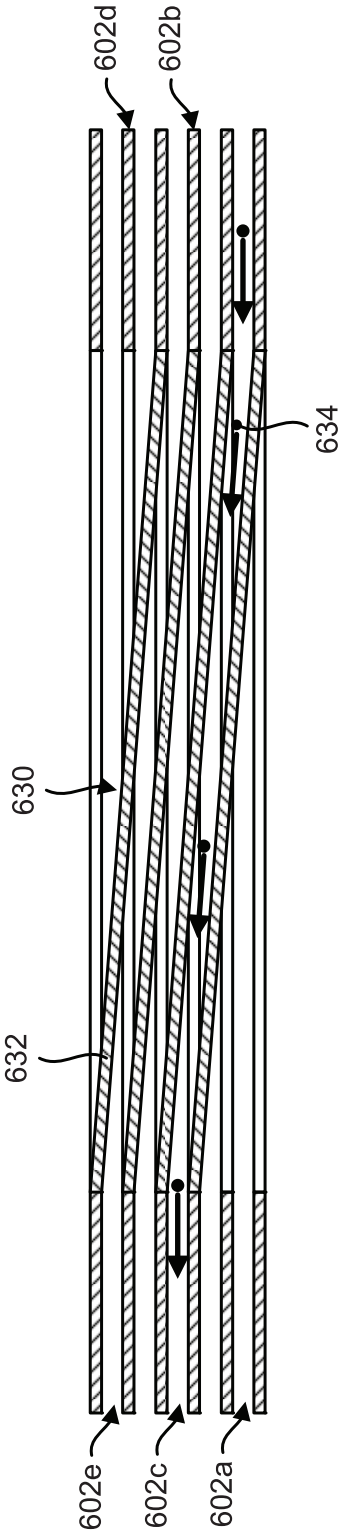

FIG. 6P

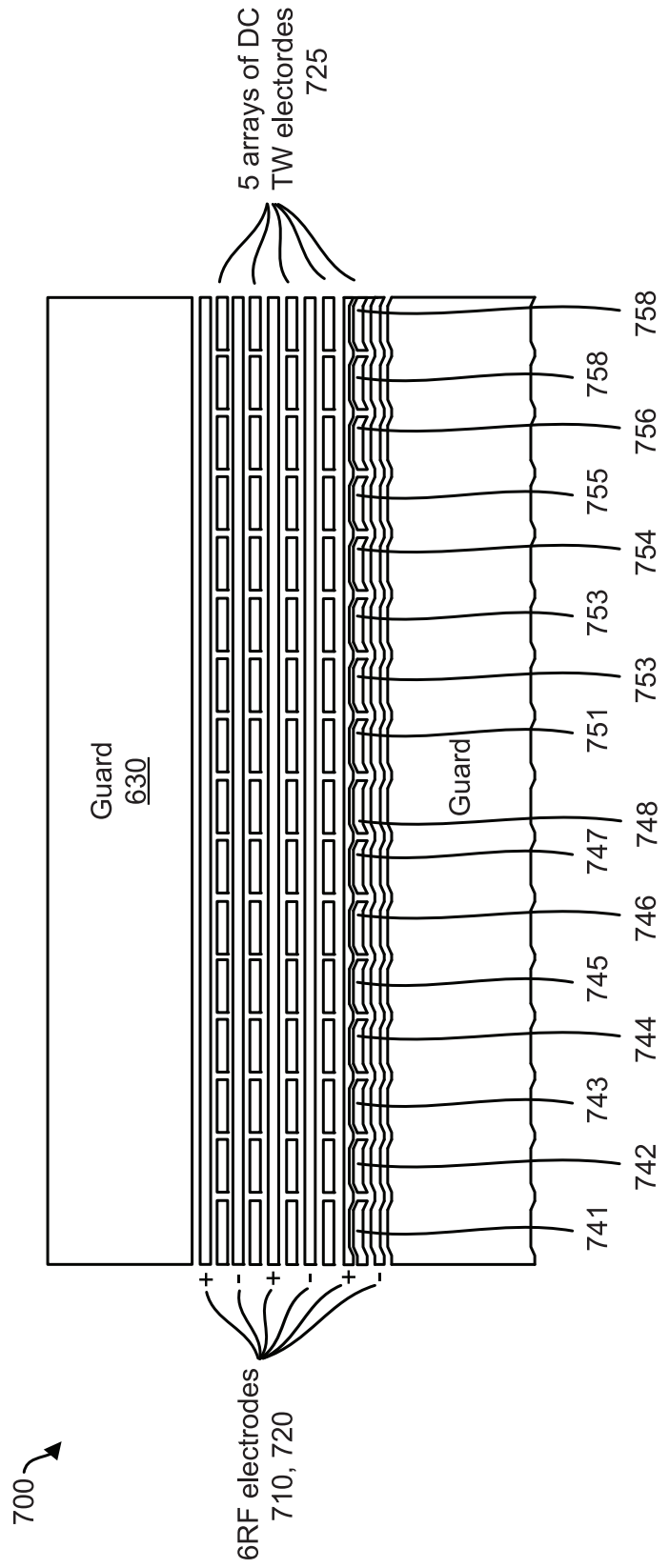
700
6RF electrodes
710, 720
5 arrays of DC
TW electordes
725
Guard
630
Guard
741
742
743
744
745
746
747
748
751
753
753
754
755
756
758
758

FIG. 7A

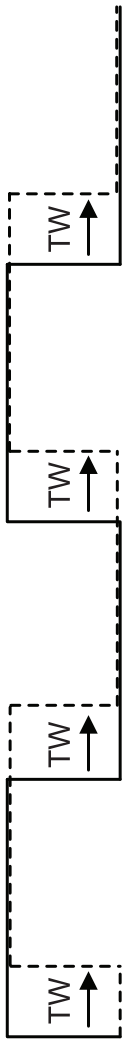
TW
TW
TW
TW

FIG. 7B

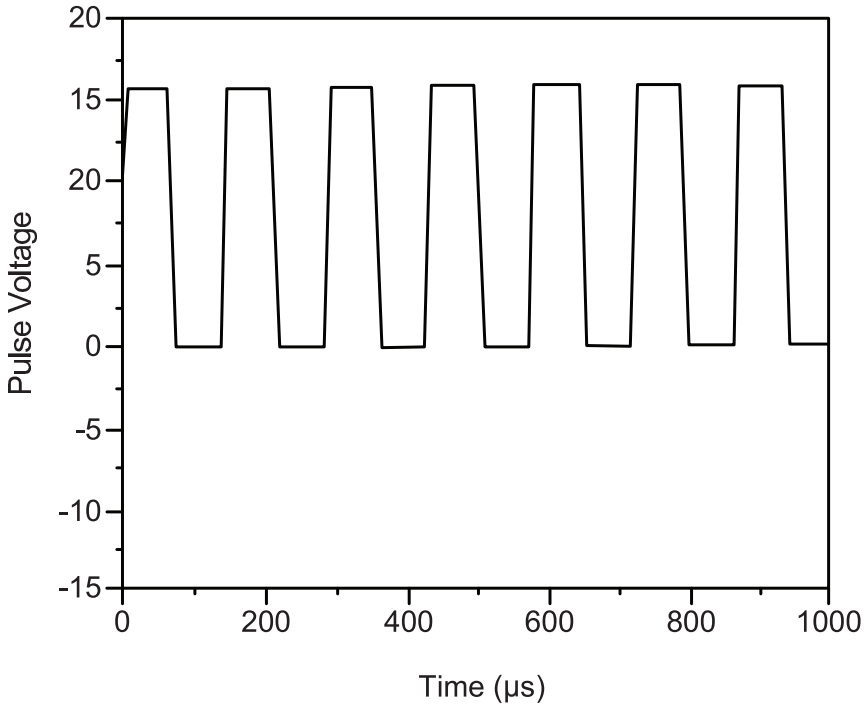
Pulse Voltage
20
15
20
5
0
-5
-10
-15
0
200
400
600
800
1000
Time (μs)

FIG. 8A

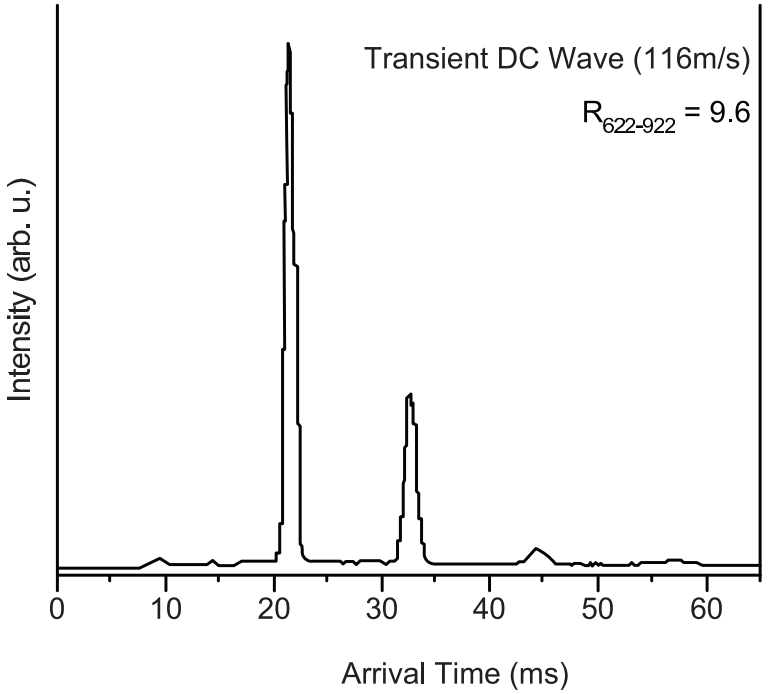
Transient DC Wave (116m/s)
$R_{622-922}$ = 9.6
Intensity (arb. u.)
0
10
20
30
40
50
60
Arrival Time (ms)

FIG. 8B

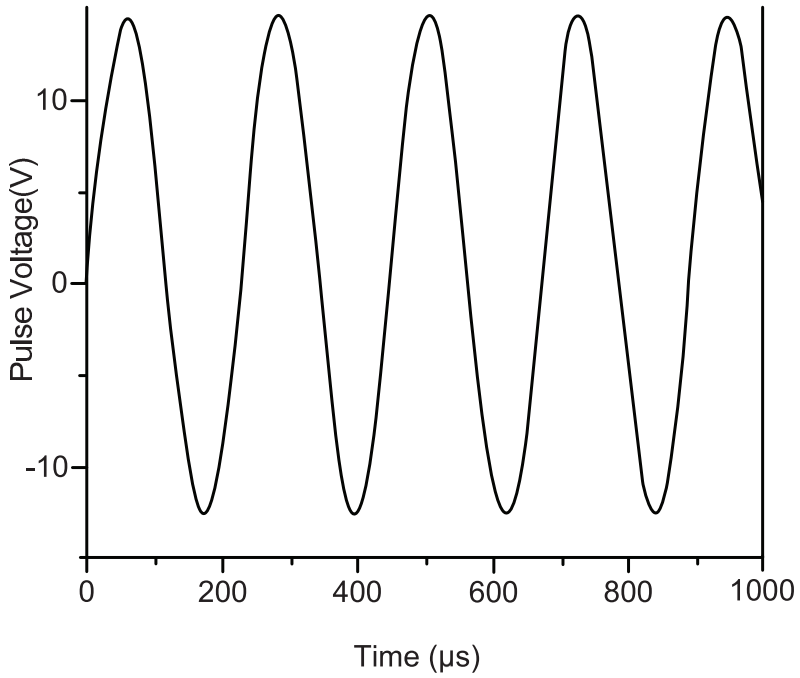
Pulse Voltage(V)
10
0
-10
0
200
400
600
800
1000
Time (μs)

FIG. 9A

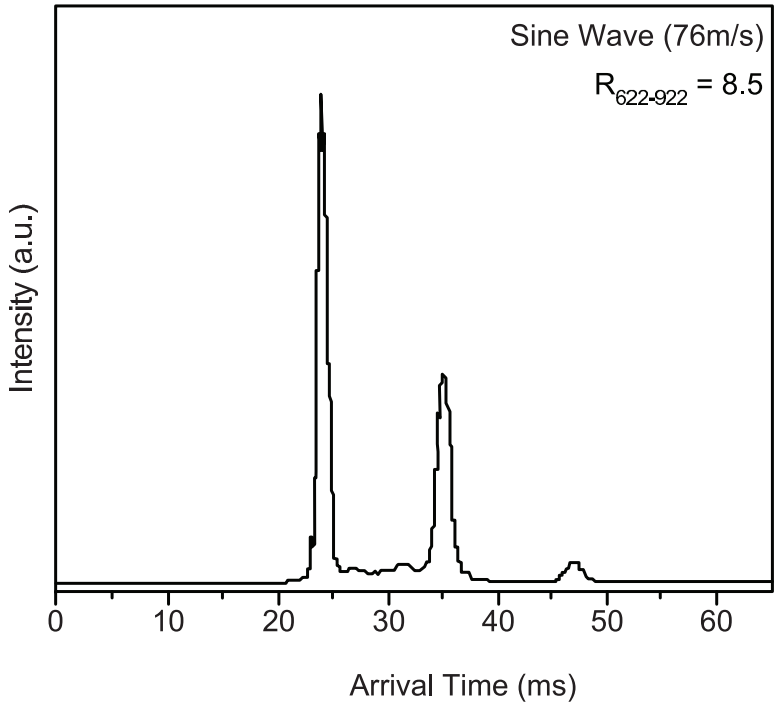
Sine Wave (76m/s)
R622-922 = 8.5
Intensity (a.u.)
0
10
20
30
40
50
60
Arrival Time (ms)

FIG. 9B

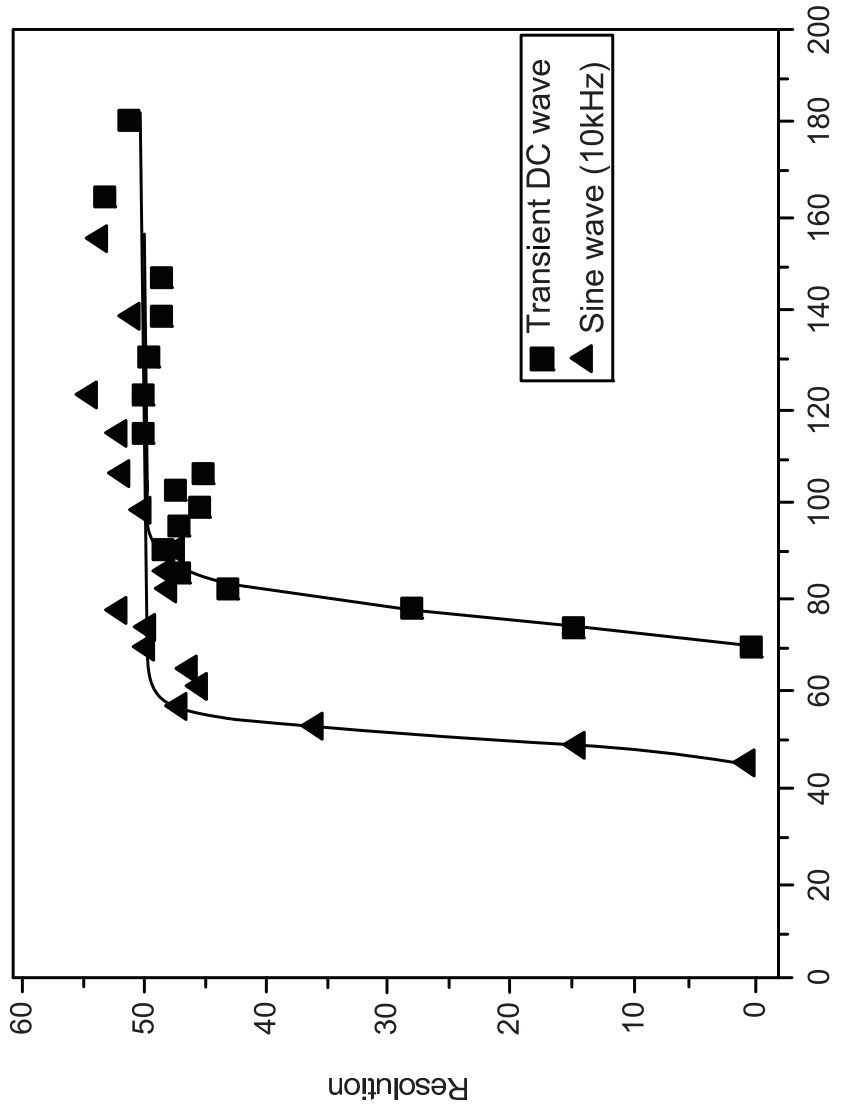
Transient DC wave
Sine wave (10kHz)
Resolution
TW Speed (m/s)
0
10
20
30
40
50
60
0
20
40
60
80
100
120
140
160
180
200

FIG. 10

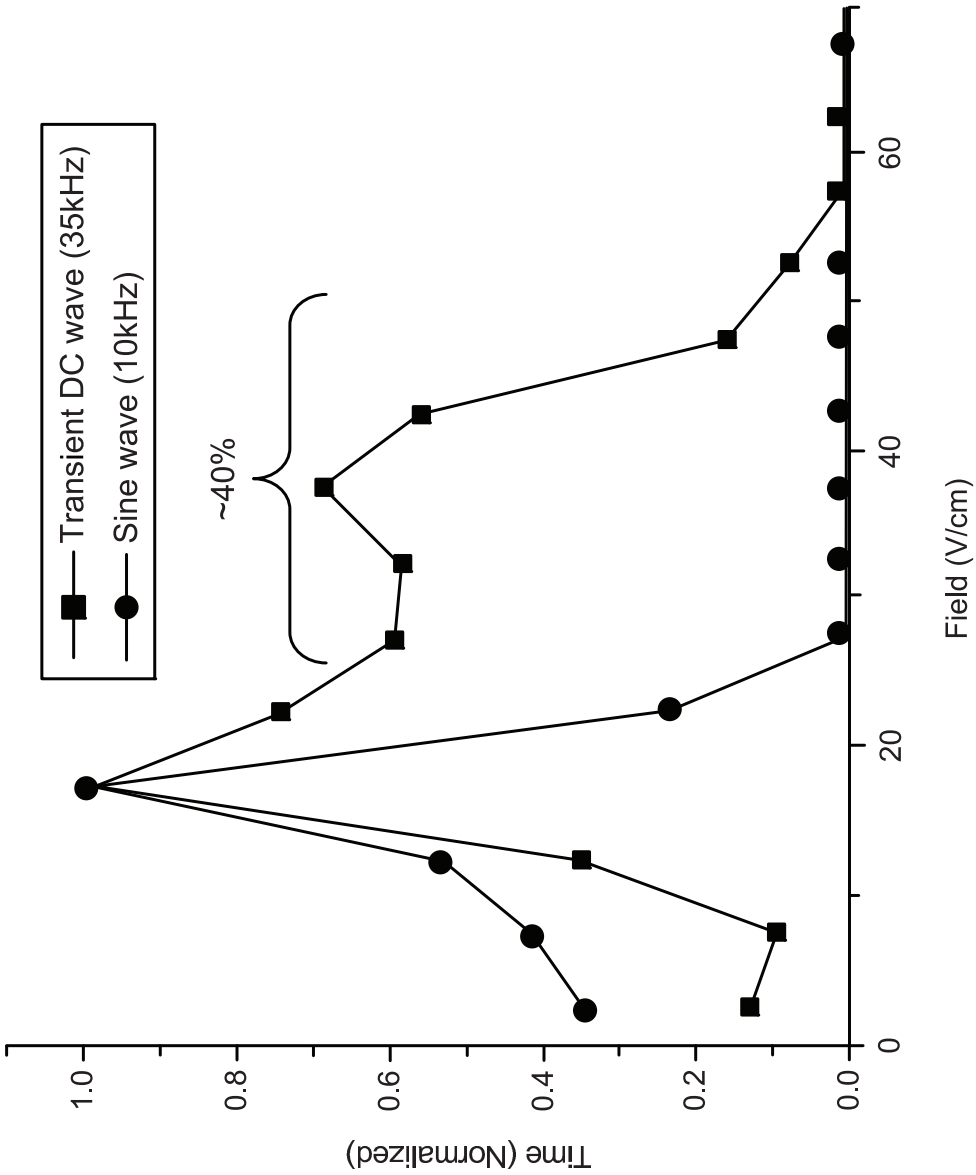
Transient DC wave (35kHz)
Sine wave (10kHz)
~40%
Time (Normalized)
Field (V/cm)
0.0
0.2
0.4
0.6
0.8
1.0
0
20
40
60

FIG. 11

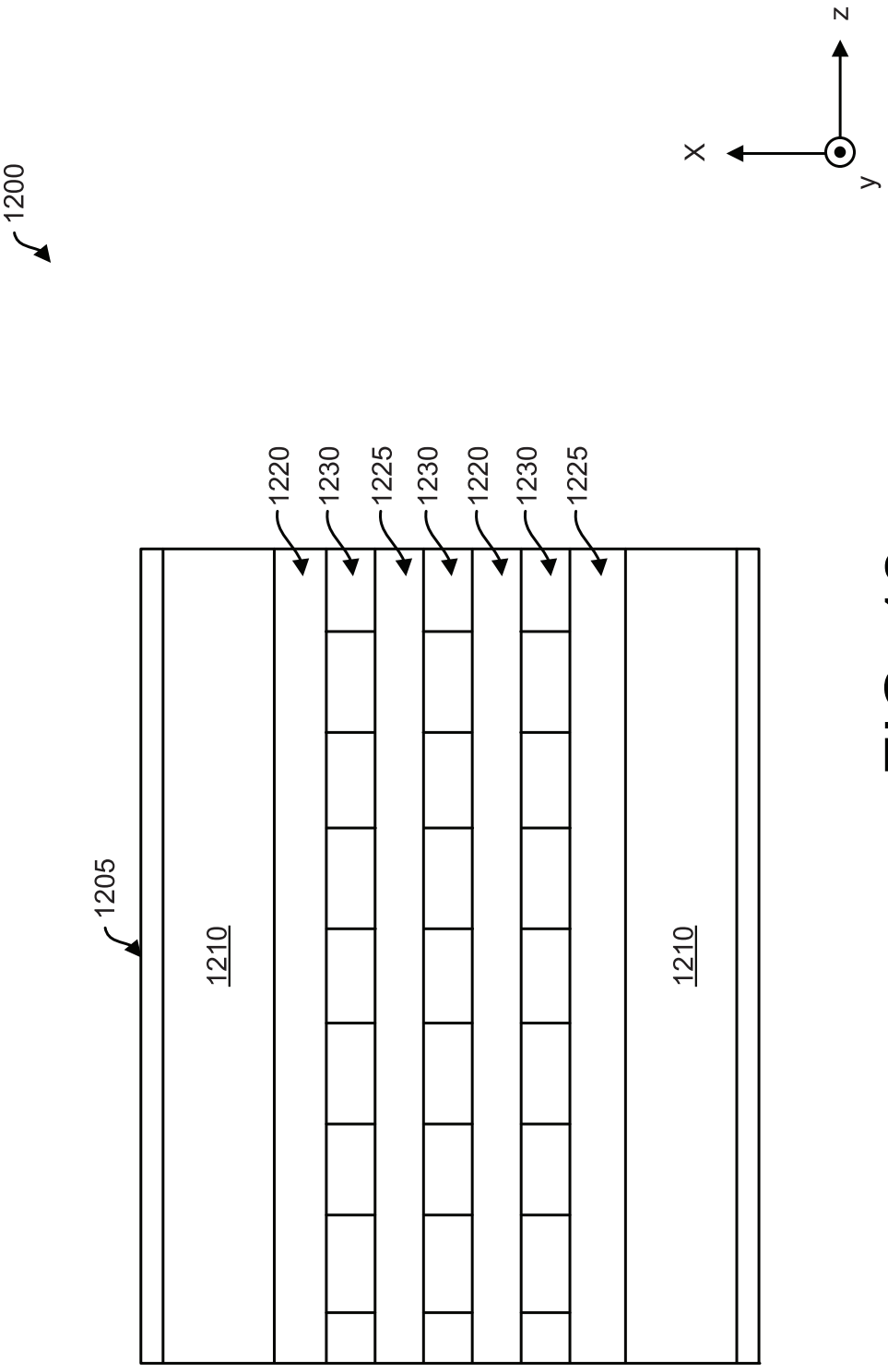

FIG. 12

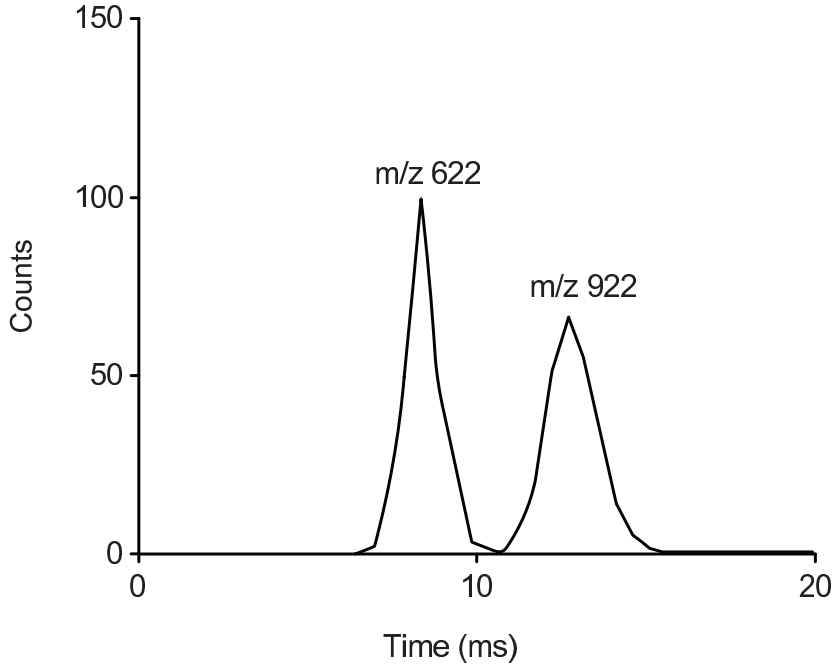

FIG. 13A

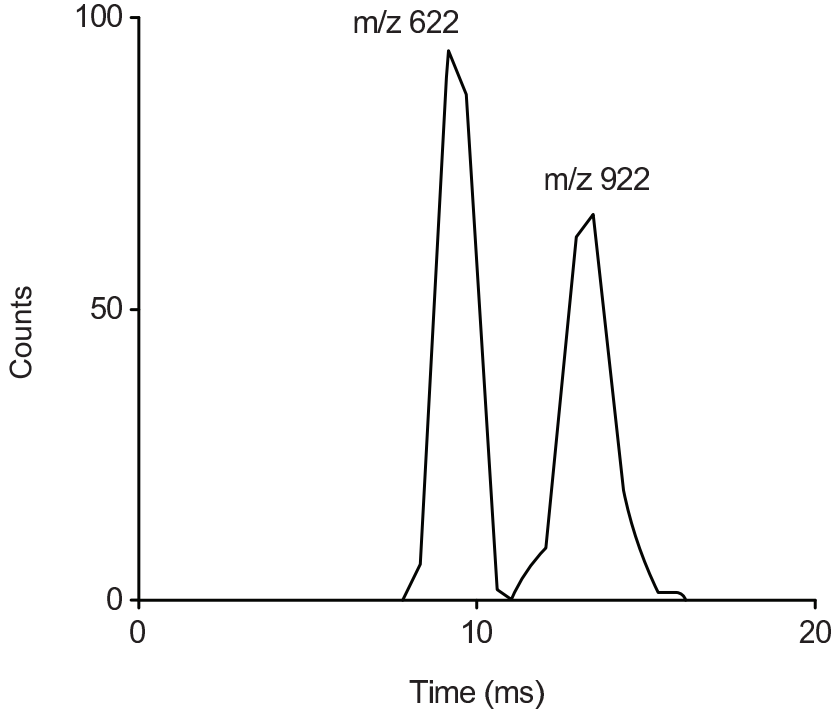

FIG. 13B