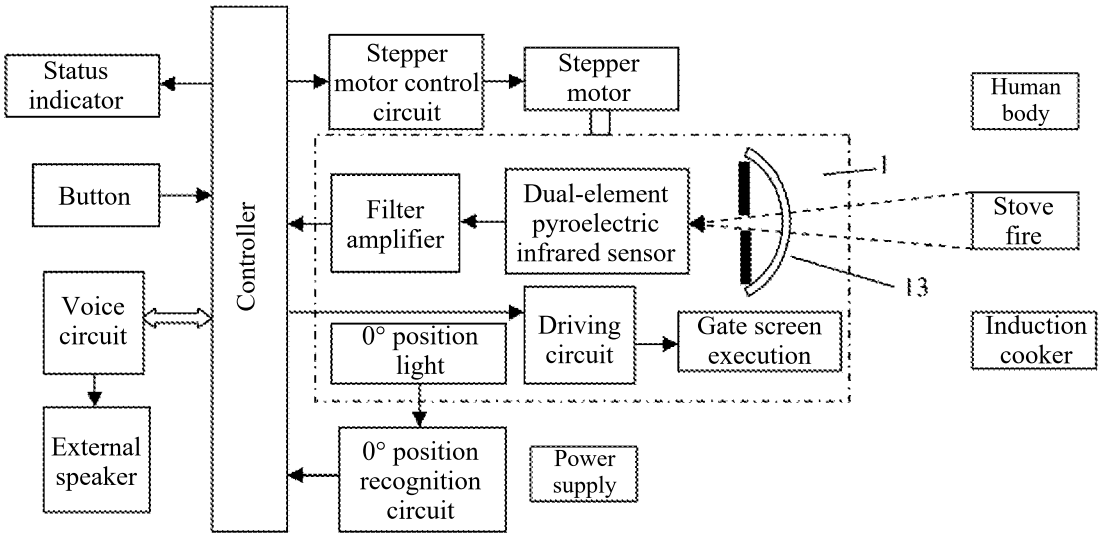
Status indicator
Button
Voice circuit
External speaker
Controller
Stepper motor control circuit
Stepper motor
Filter amplifier
Dual-element pyroelectric infrared sensor
0° position light
Driving circuit
Gate screen execution
0° position recognition circuit
Power supply
Human body
Stove fire
Induction cooker
1
13

*Fig. 1*

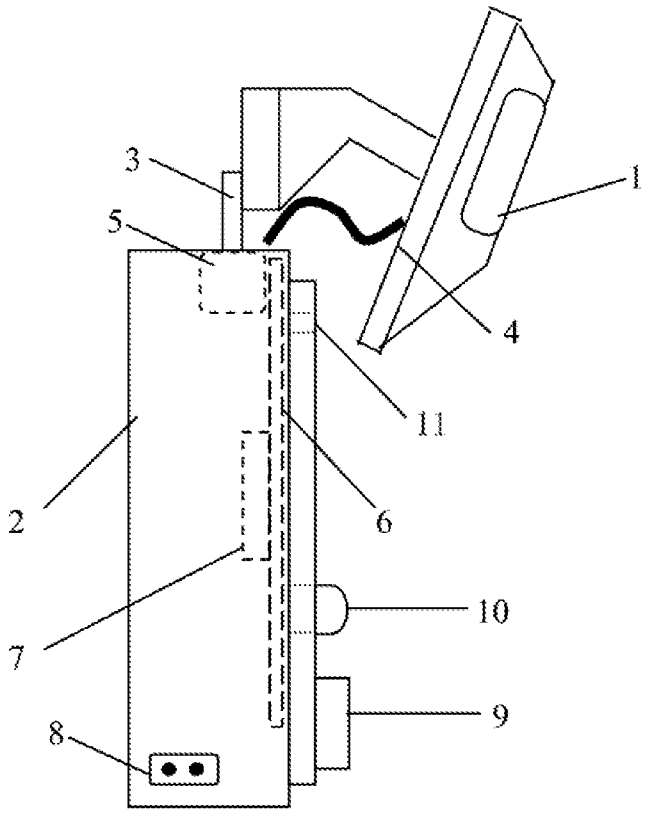
1
2
3
4
5
6
7
8
9
10
11

*Fig. 2*

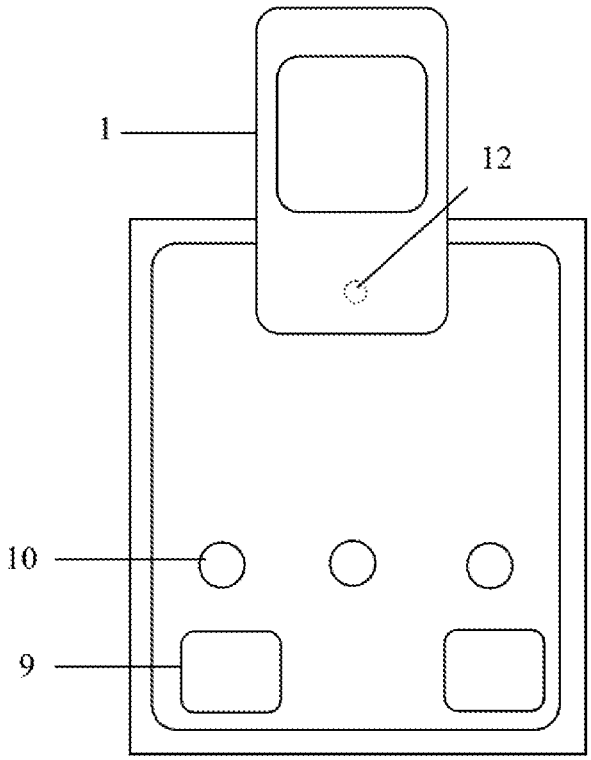


*Fig. 3*

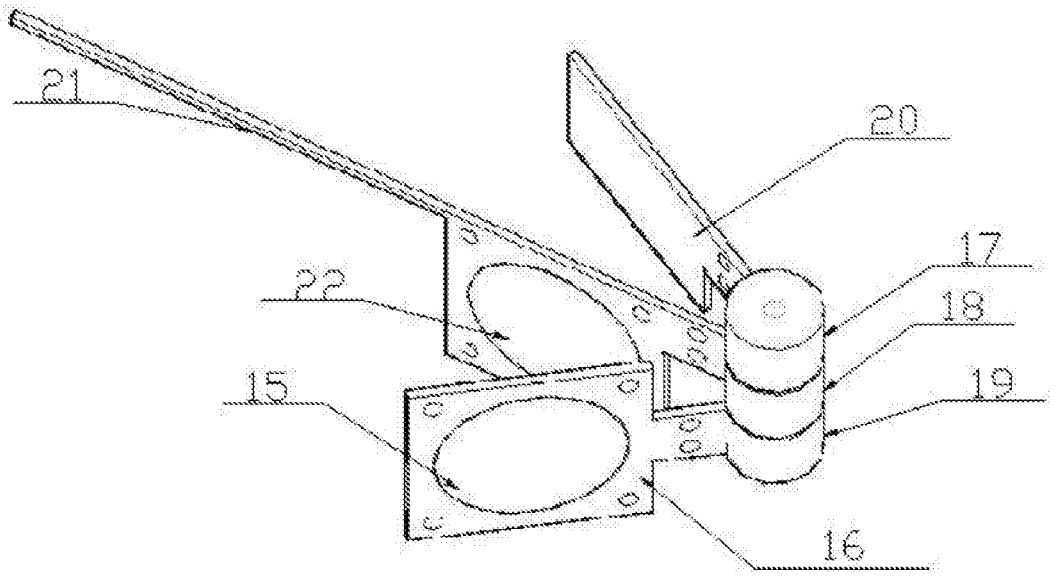


*Fig. 4*

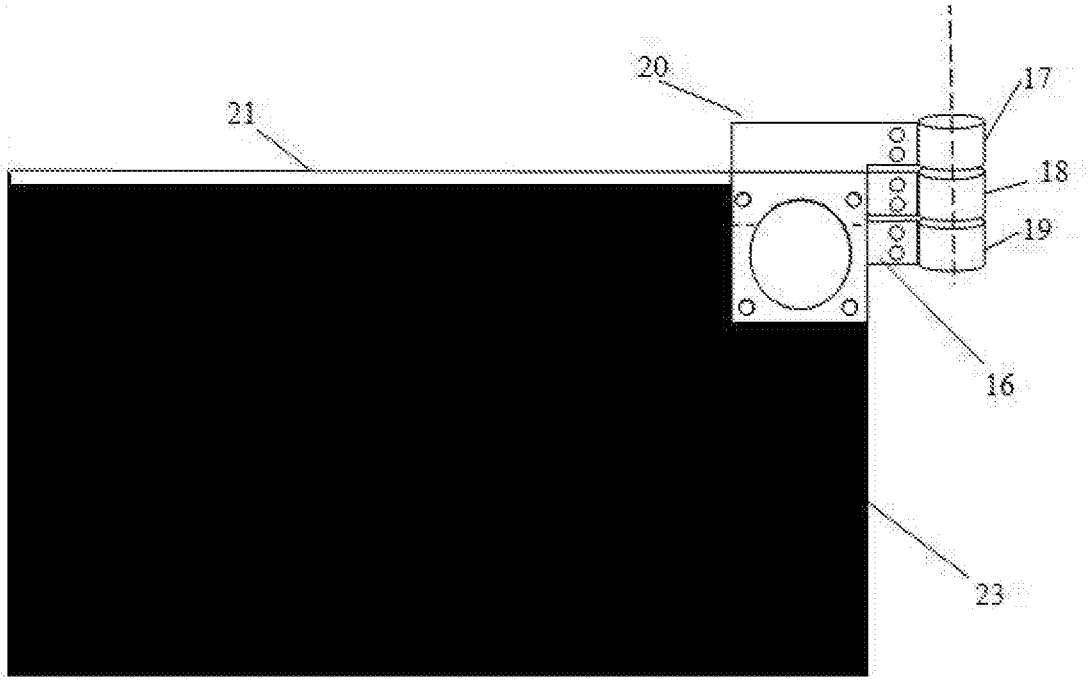


*Fig. 5*

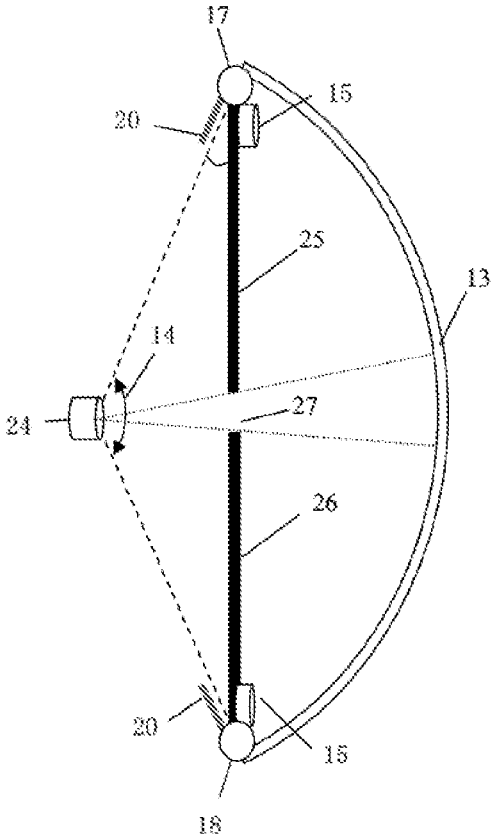


*Fig. 6*

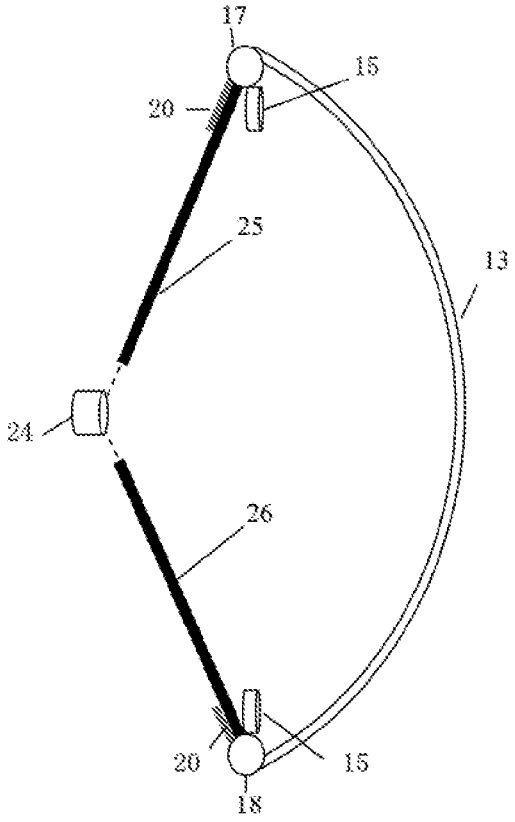


*Fig. 7*

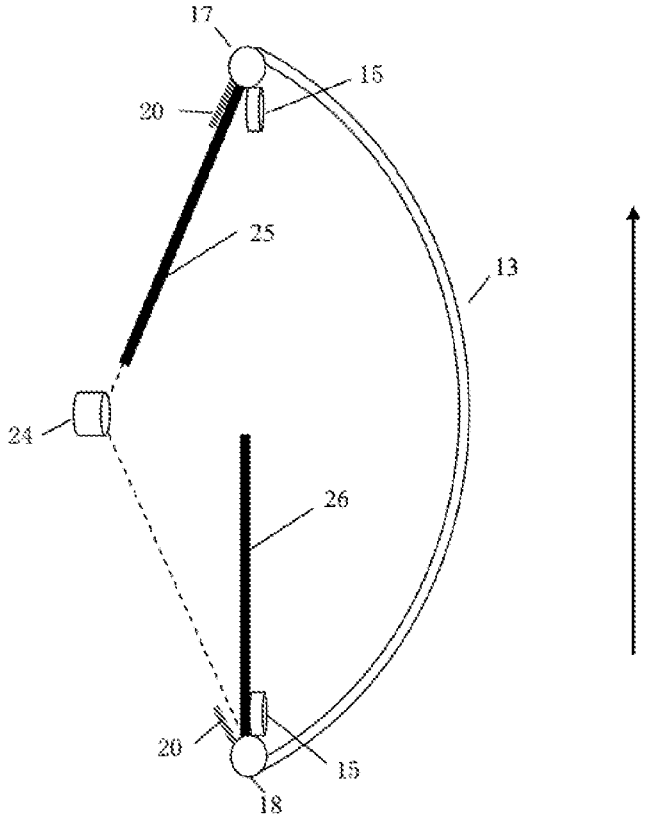


*Fig. 8*

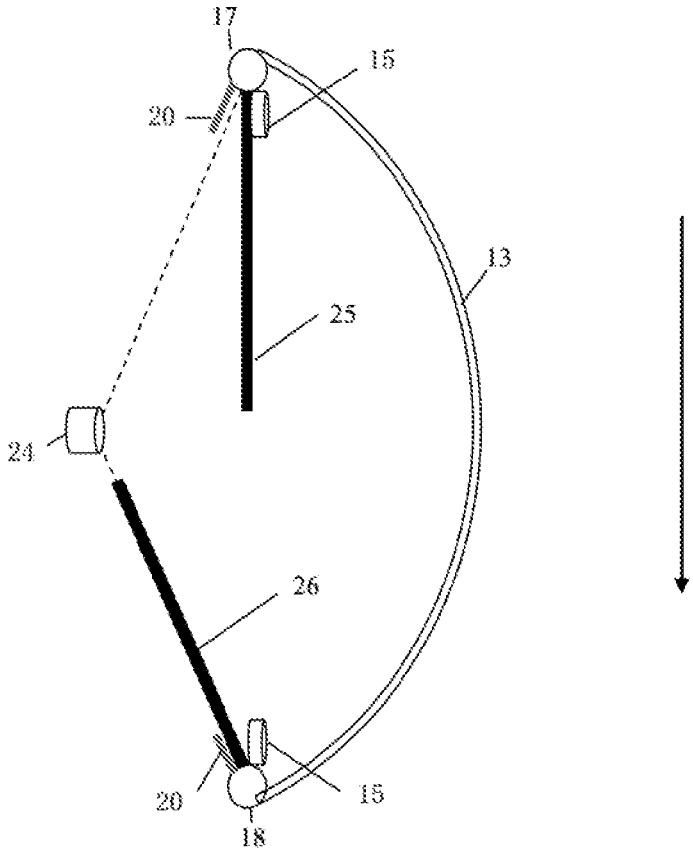


*Fig. 9*

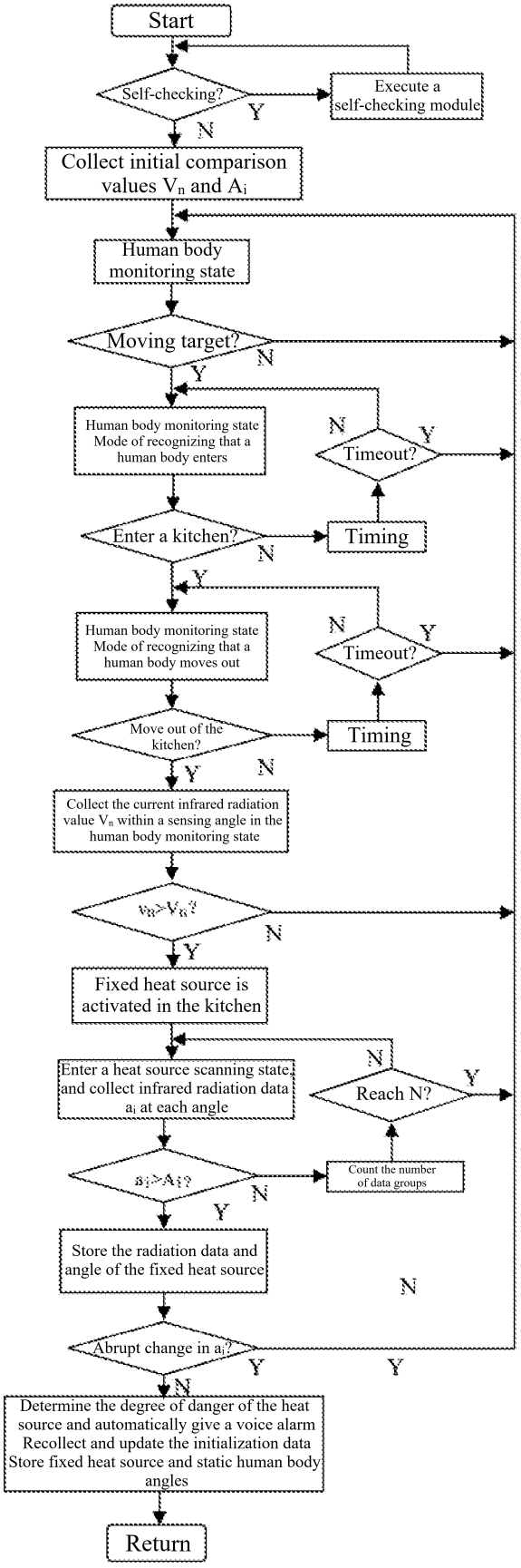
Start
Self-checking?
Y
Execute a self-checking module
N
Collect initial comparison values $V_n$ and $A_i$
Human body monitoring state
Moving target?
N
Y
Human body monitoring state Mode of recognizing that a human body enters
N
Timeout?
Y
Enter a kitchen?
N
Timing
Y
Human body monitoring state Mode of recognizing that a human body moves out
N
Timeout?
Y
Move out of the kitchen?
Timing
Y
N
Collect the current infrared radiation value $V_n$ within a sensing angle in the human body monitoring state
$v_R$>$V_R$?
N
Y
Fixed heat source is activated in the kitchen
Enter a heat source scanning state and collect infrared radiation data $a_i$ at each angle
N
Reach N?
Y
$a_i$>$A_i$?
N
Count the number of data groups
Y
Store the radiation data and angle of the fixed heat source
N
Abrupt change in $a_i$?
Y
Y
N
Determine the degree of danger of the heat source and automatically give a voice alarm
Recollect and update the initialization data
Store fixed heat source and static human body angles
Return

*Fig. 10*