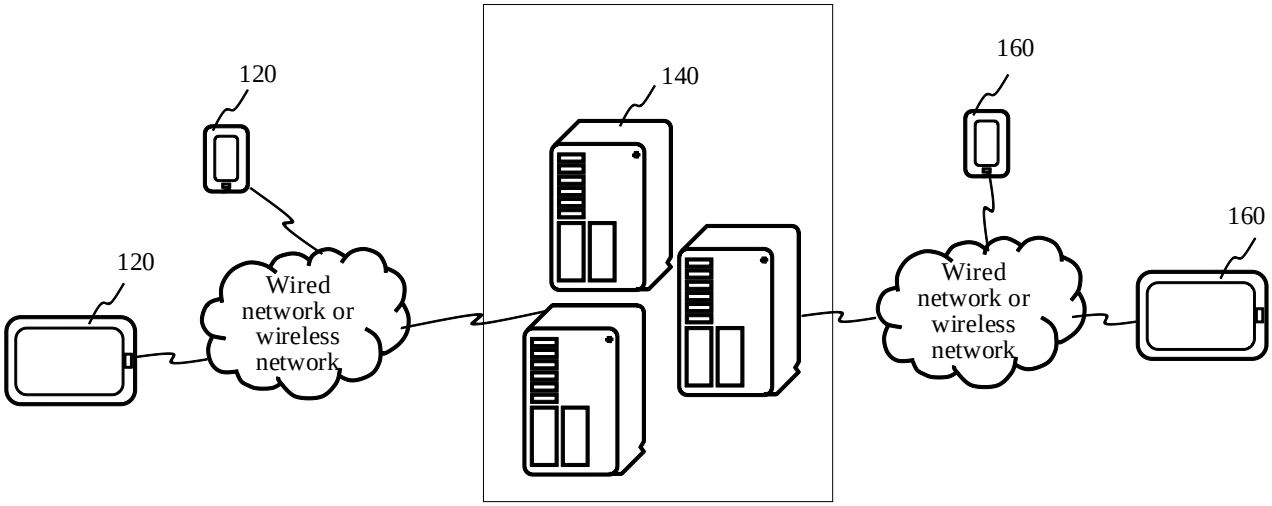
120
140
160
120
160
Wired network or wireless network
Wired network or wireless network

FIG. 1

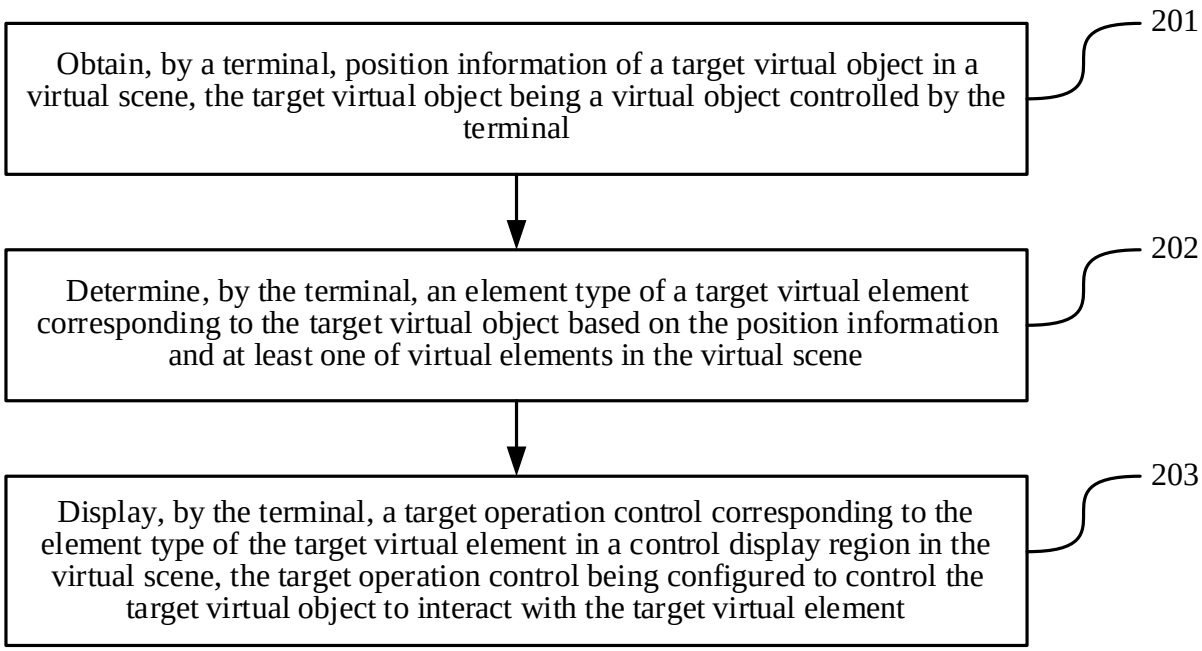
Obtain, by a terminal, position information of a target virtual object in a virtual scene, the target virtual object being a virtual object controlled by the terminal
201
Determine, by the terminal, an element type of a target virtual element corresponding to the target virtual object based on the position information and at least one of virtual elements in the virtual scene
202
Display, by the terminal, a target operation control corresponding to the element type of the target virtual element in a control display region in the virtual scene, the target operation control being configured to control the target virtual object to interact with the target virtual element
203

FIG. 2

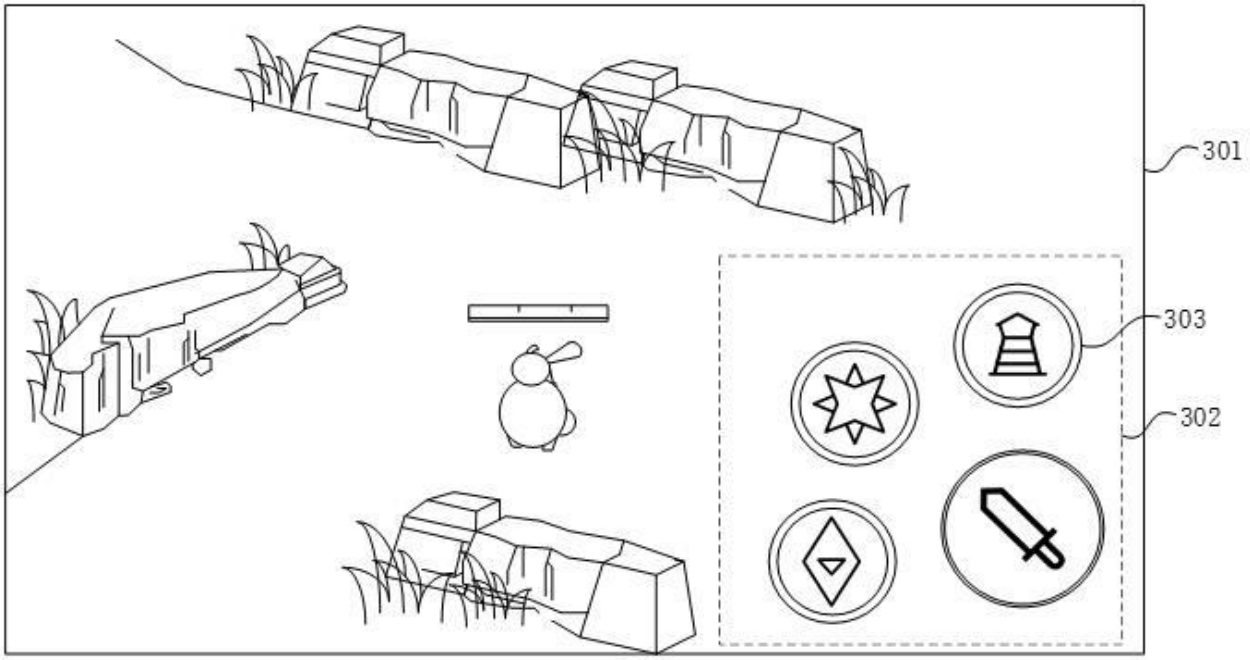
301
303
302

FIG. 3

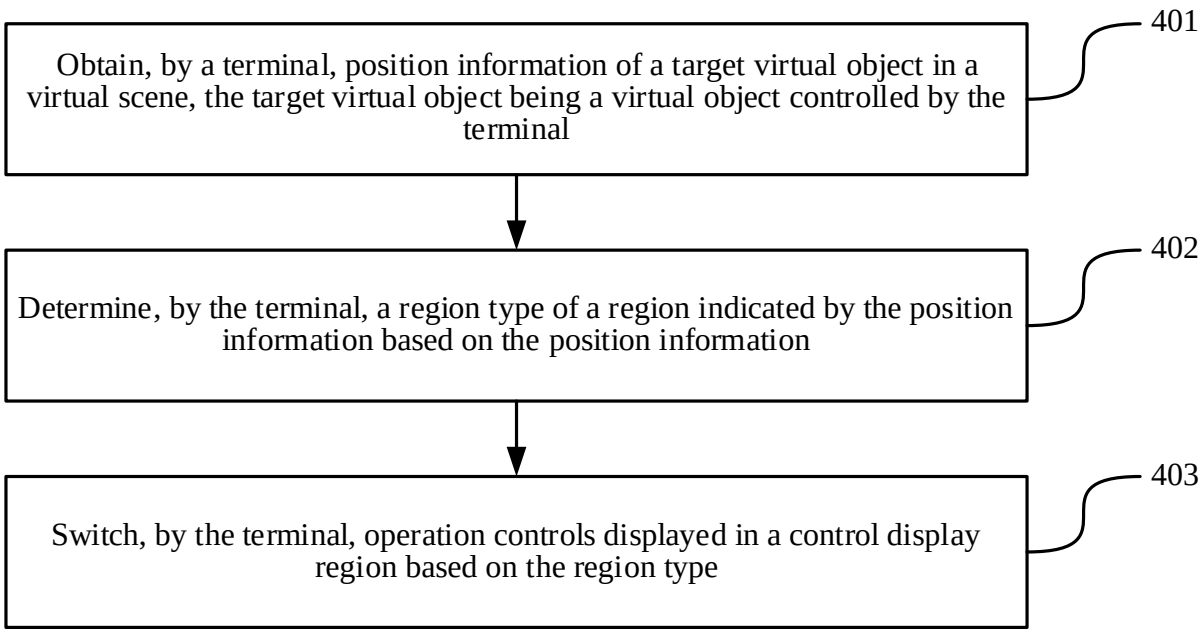
Obtain, by a terminal, position information of a target virtual object in a virtual scene, the target virtual object being a virtual object controlled by the terminal
401
Determine, by the terminal, a region type of a region indicated by the position information based on the position information
402
Switch, by the terminal, operation controls displayed in a control display region based on the region type
403

FIG. 4

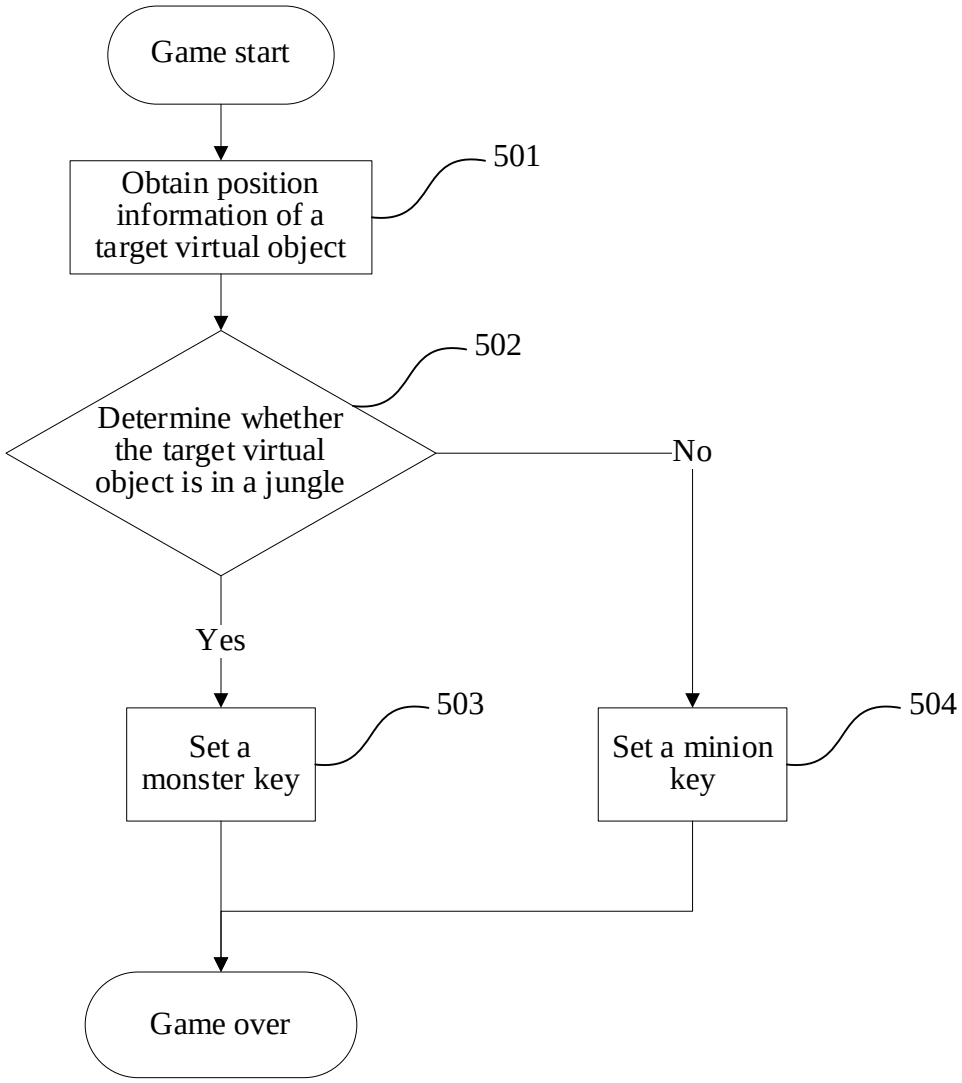
Game start
Obtain position information of a target virtual object
501
Determine whether the target virtual object is in a jungle
502
No
Yes
Set a monster key
503
Set a minion key
504
Game over

FIG. 5

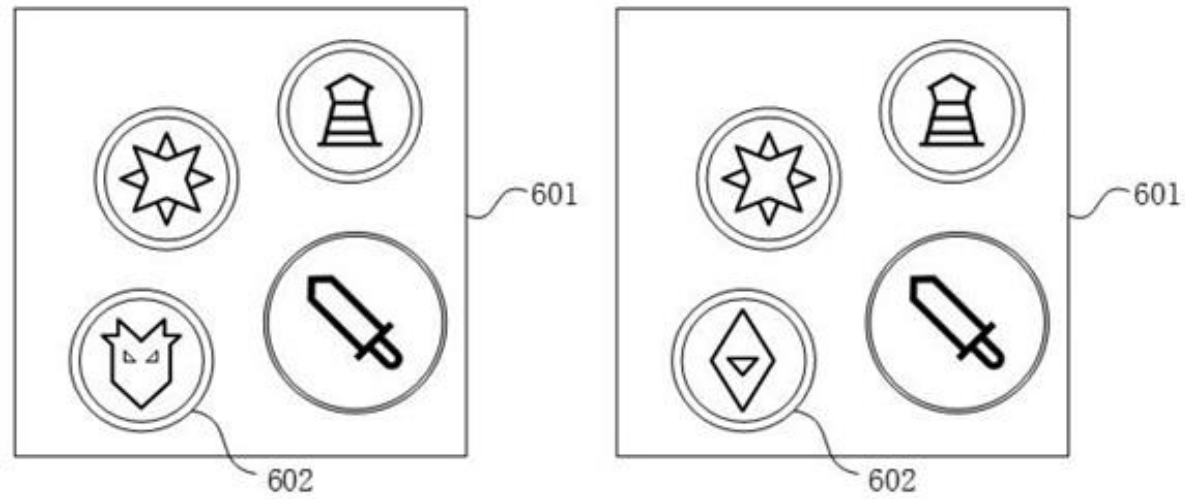
601
602
601
602

(a) (b)

FIG. 6

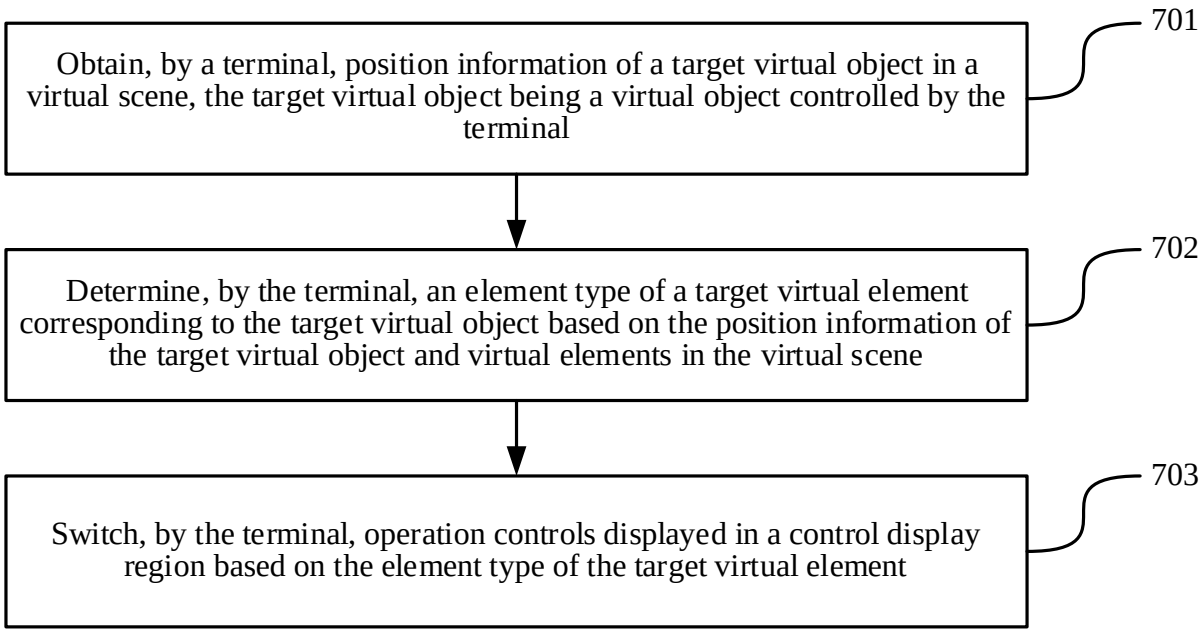
Obtain, by a terminal, position information of a target virtual object in a virtual scene, the target virtual object being a virtual object controlled by the terminal
701
Determine, by the terminal, an element type of a target virtual element corresponding to the target virtual object based on the position information of the target virtual object and virtual elements in the virtual scene
702
Switch, by the terminal, operation controls displayed in a control display region based on the element type of the target virtual element
703

FIG. 7

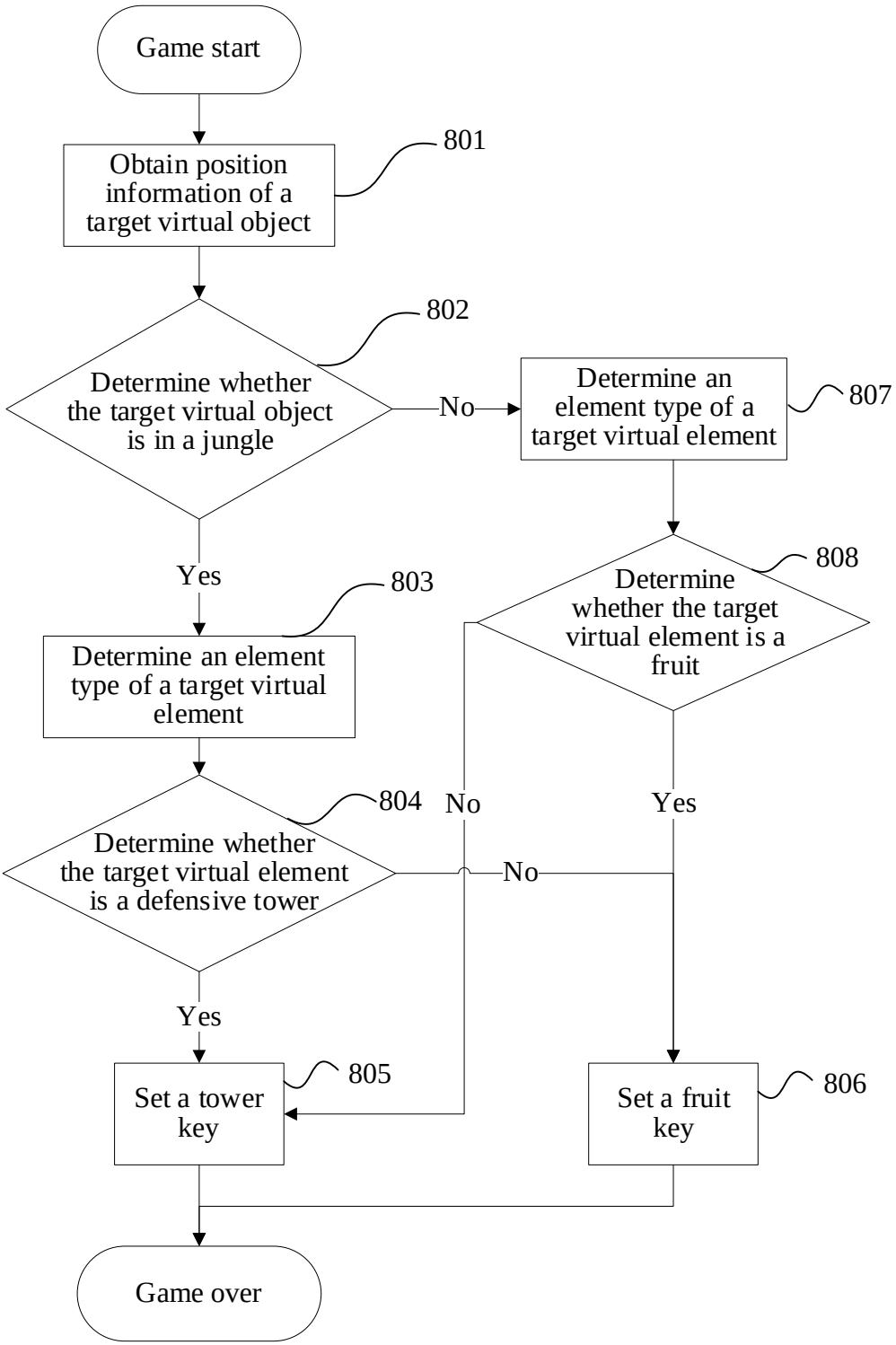
Game start
Obtain position information of a target virtual object
801
Determine whether the target virtual object is in a jungle
802
No
Determine an element type of a target virtual element
807
Yes
Determine an element type of a target virtual element
803
Determine whether the target virtual element is a fruit
808
Determine whether the target virtual element is a defensive tower
804
No
Yes
No
Yes
Set a tower key
805
Set a fruit key
806
Game over

FIG. 8

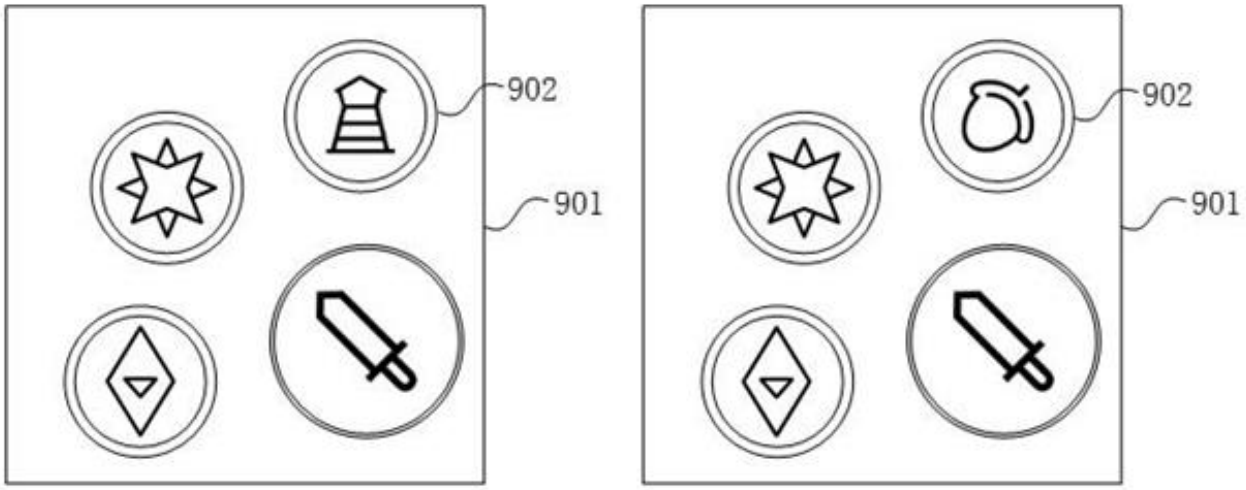

(a) (b)

FIG. 9

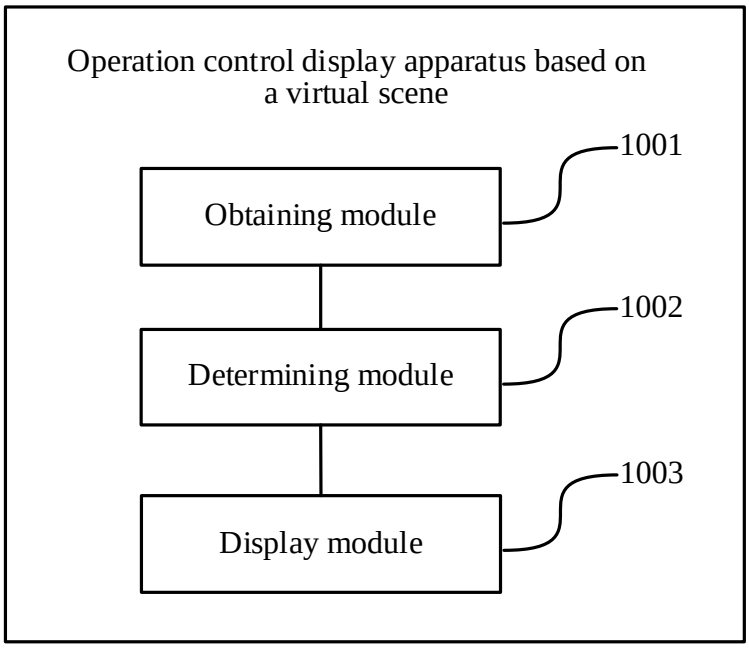

FIG. 10

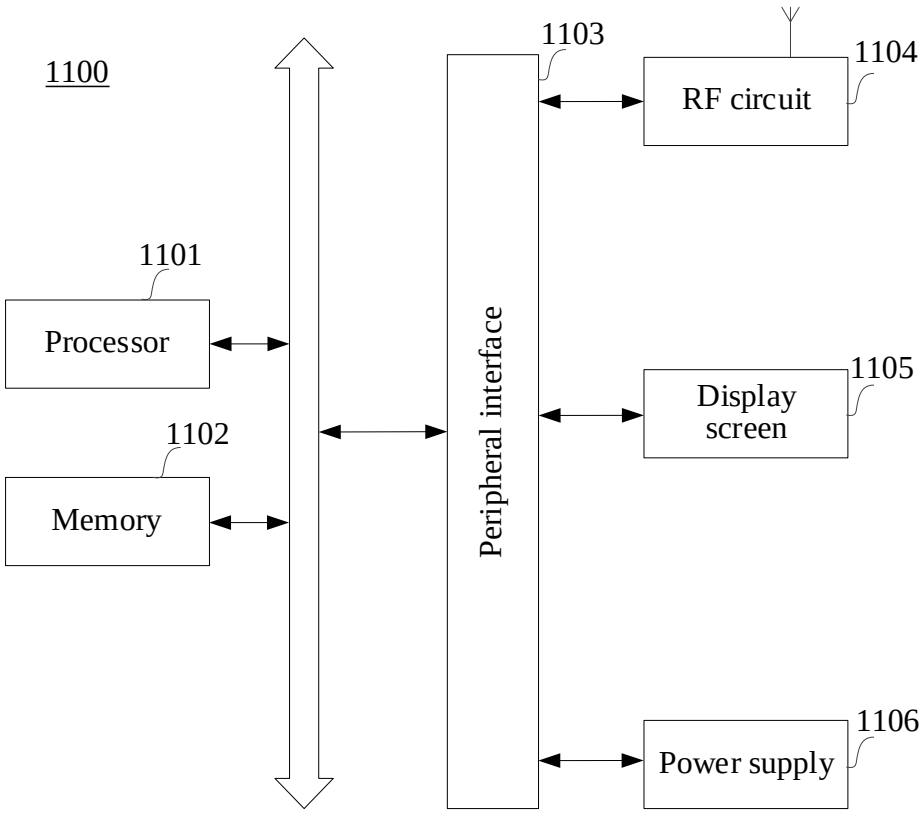
1100
1103
1104
RF circuit
1101
Processor
Peripheral interface
1105
Display screen
1102
Memory
1106
Power supply

FIG. 11

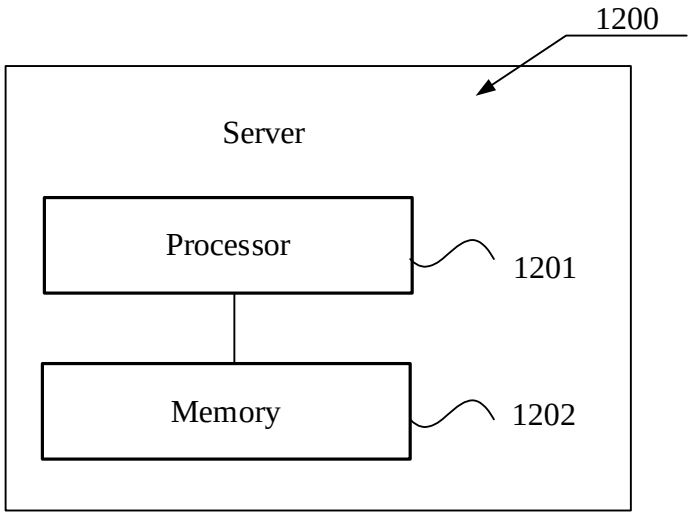
1200
Server
Processor
1201
Memory
1202

FIG. 12