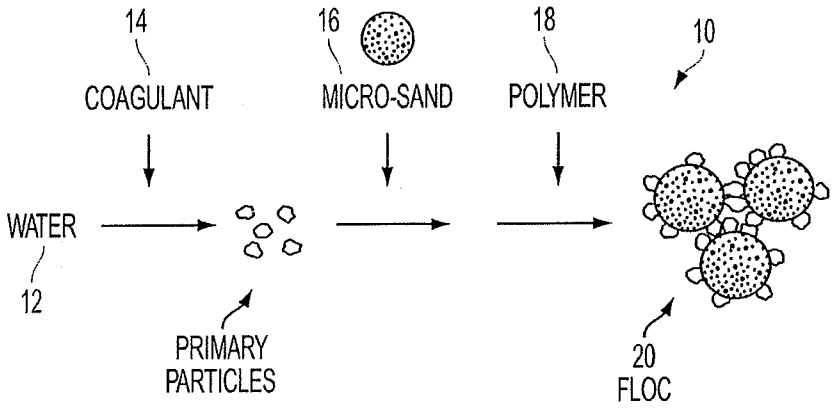
14
COAGULANT
16
MICRO-SAND
18
POLYMER
10
WATER
12
PRIMARY
PARTICLES
20
FLOC

FIG. 1

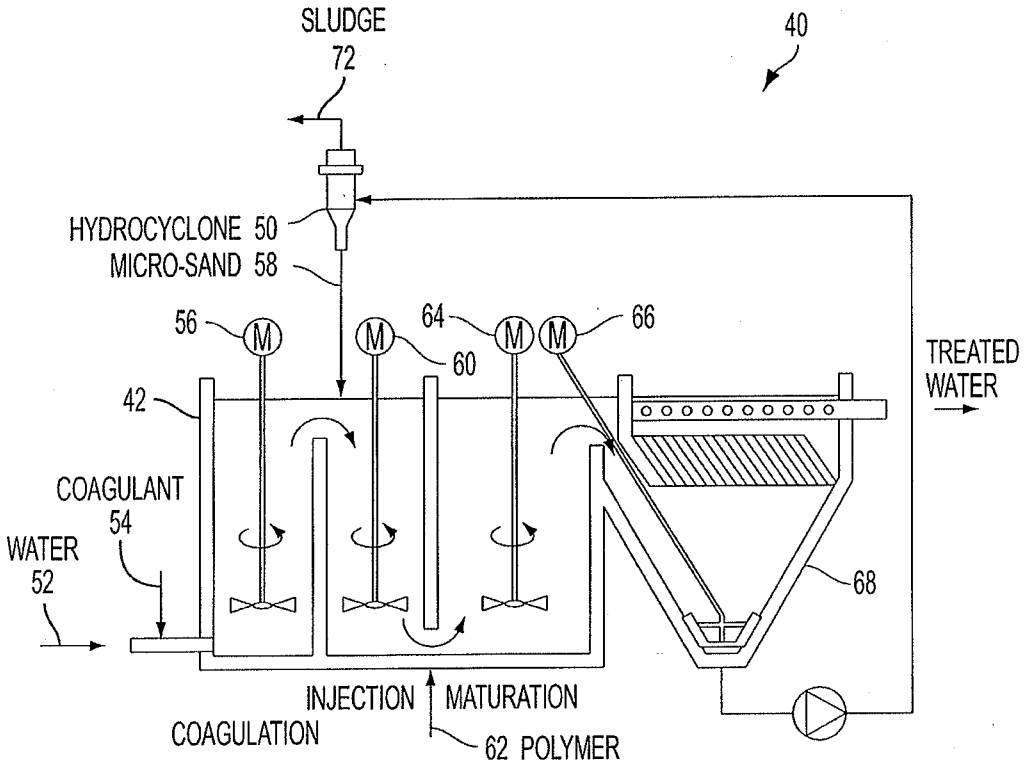
SLUDGE
72
40
HYDROCYCLONE 50
MICRO-SAND 58
56
64
66
60
42
TREATED
WATER
COAGULANT
54
WATER
52
68
INJECTION
MATURATION
COAGULATION
62 POLYMER

FIG. 2

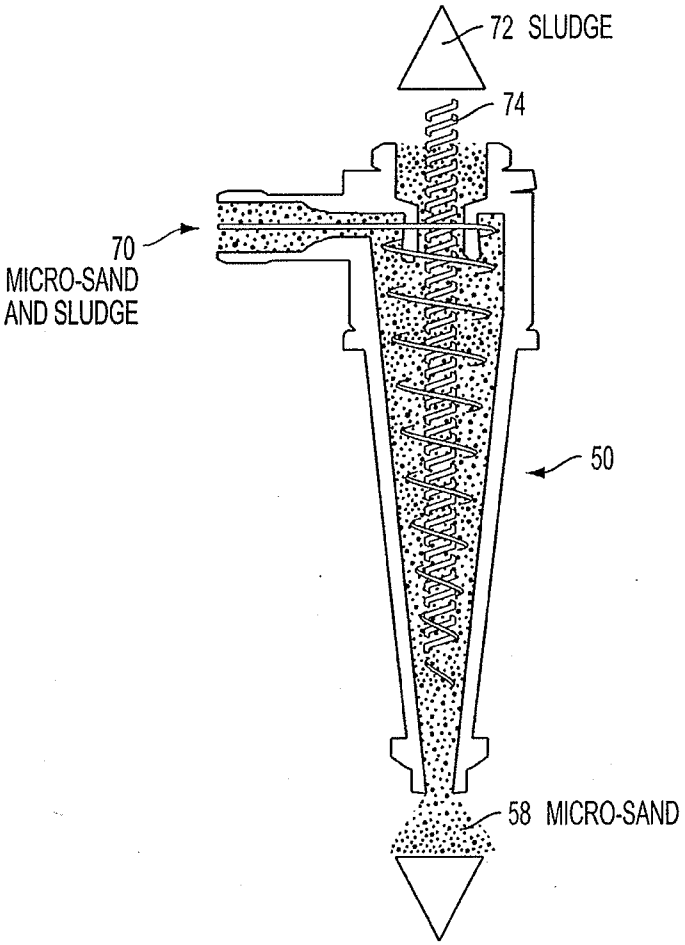

FIG. 3

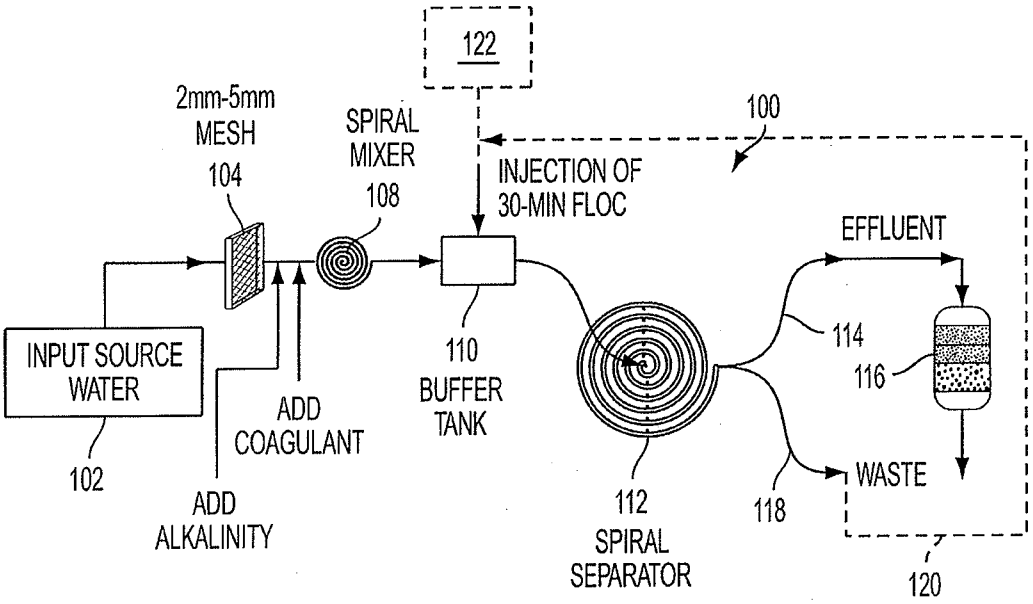
122
2mm-5mm
MESH
104
SPIRAL
MIXER
108
100
INJECTION OF
30-MIN FLOC
EFFLUENT
114
116
INPUT SOURCE
WATER
102
ADD
COAGULANT
ADD
ALKALINITY
110
BUFFER
TANK
112
SPIRAL
SEPARATOR
118
WASTE
120

FIG. 4

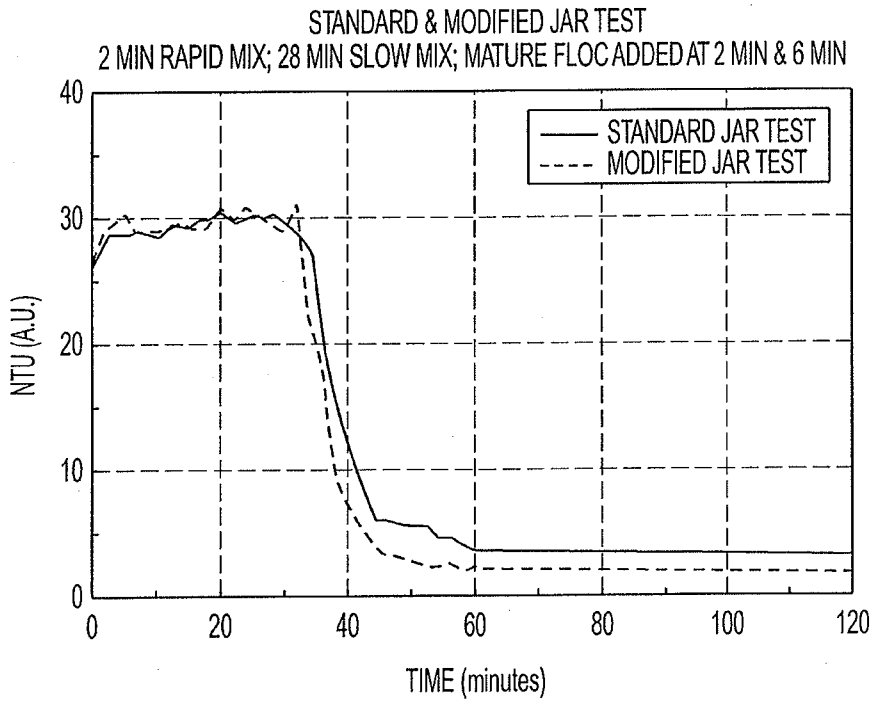
STANDARD & MODIFIED JAR TEST
2 MIN RAPID MIX; 28 MIN SLOW MIX; MATURE FLOC ADDED AT 2 MIN & 6 MIN
STANDARD JAR TEST
MODIFIED JAR TEST
NTU (A.U.)
TIME (minutes)
0
10
20
30
40
0
20
40
60
80
100
120

FIG. 5

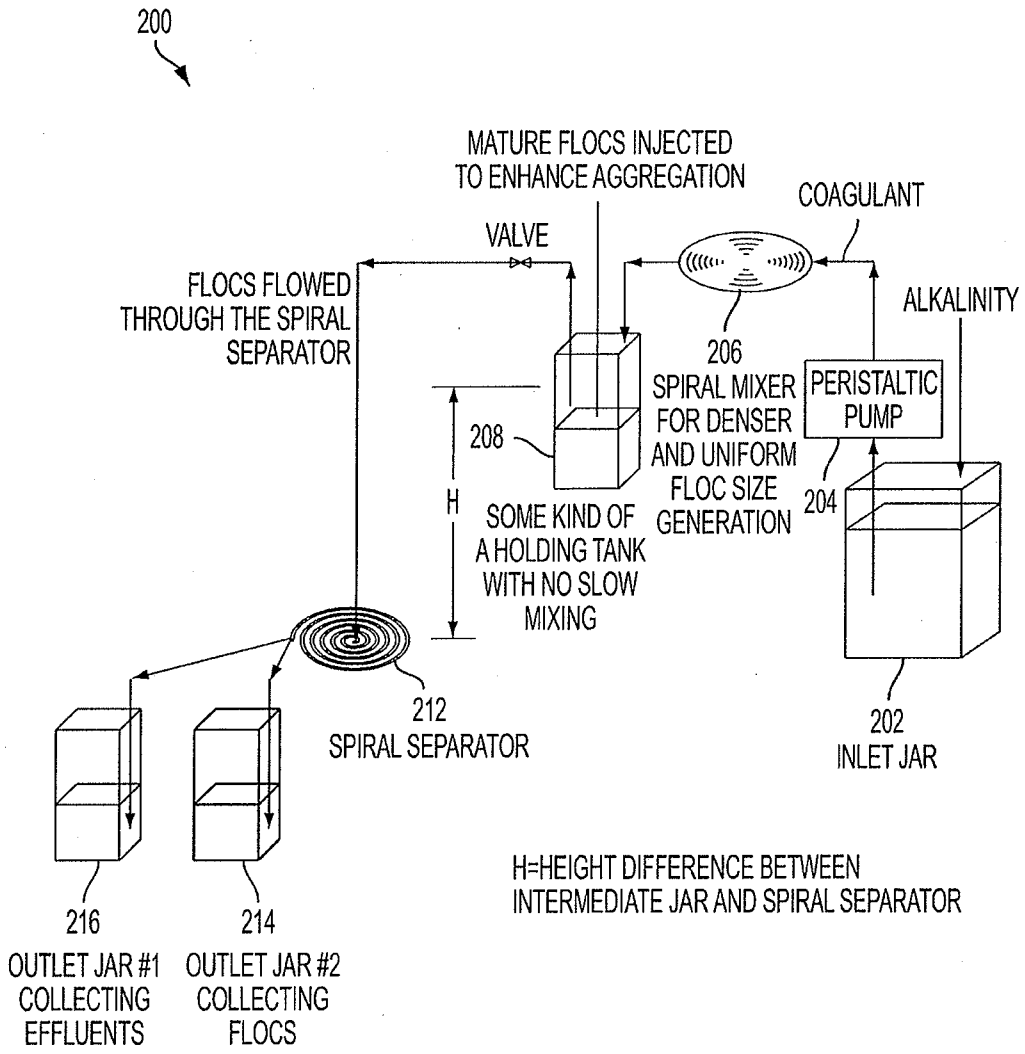
200
MATURE FLOCS INJECTED
TO ENHANCE AGGREGATION
COAGULANT
VALVE
FLOCS FLOWED
THROUGH THE SPIRAL
SEPARATOR
ALKALINITY
206
SPIRAL MIXER
FOR DENSER
AND UNIFORM
FLOC SIZE
GENERATION
PERISTALTIC
PUMP
208
H
SOME KIND OF
A HOLDING TANK
WITH NO SLOW
MIXING
204
212
SPIRAL SEPARATOR
202
INLET JAR
H=HEIGHT DIFFERENCE BETWEEN
INTERMEDIATE JAR AND SPIRAL SEPARATOR
216
214
OUTLET JAR #1
COLLECTING
EFFLUENTS
OUTLET JAR #2
COLLECTING
FLOCS

FIG. 6

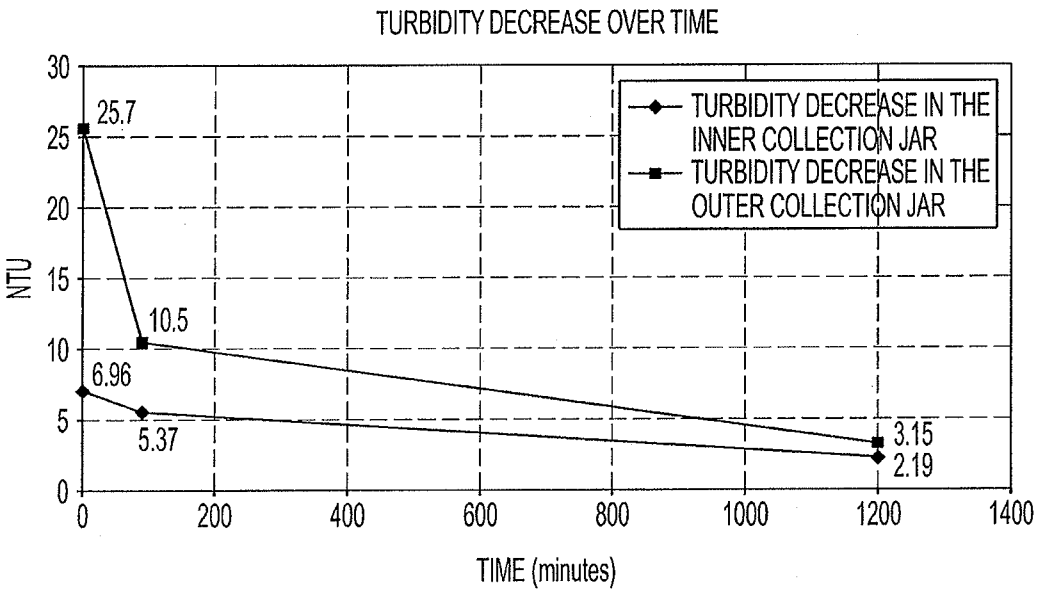
TURBIDITY DECREASE OVER TIME
NTU
TIME (minutes)
TURBIDITY DECREASE IN THE INNER COLLECTION JAR
TURBIDITY DECREASE IN THE OUTER COLLECTION JAR
25.7
10.5
6.96
5.37
3.15
2.19
0
5
10
15
20
25
30
0
200
400
600
800
1000
1200
1400

FIG. 7

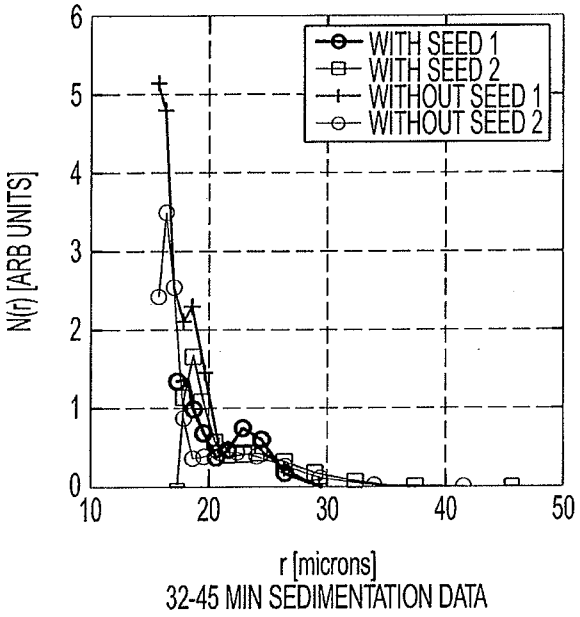
WITH SEED 1
WITH SEED 2
WITHOUT SEED 1
WITHOUT SEED 2
N(r) [ARB UNITS]
0
1
2
3
4
5
6
10
20
30
40
50
r [microns]
32-45 MIN SEDIMENTATION DATA

FIG. 8A

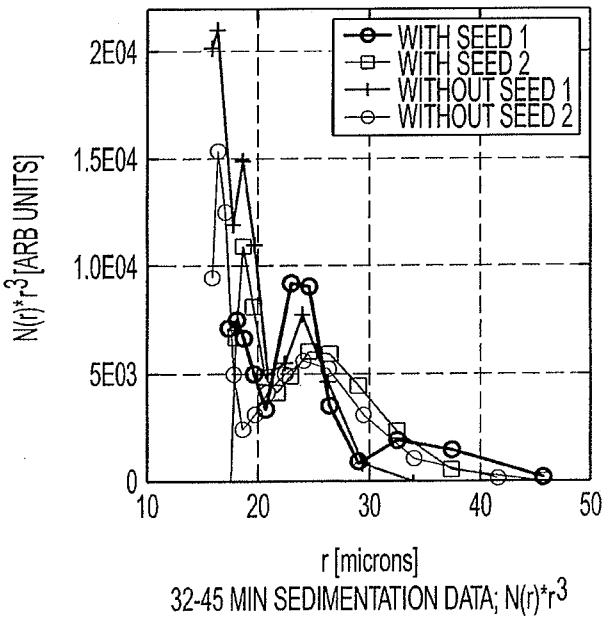
WITH SEED 1
WITH SEED 2
WITHOUT SEED 1
WITHOUT SEED 2
N(r)*r3 [ARB UNITS]
0
5E03
1.0E04
1.5E04
2E04
10
20
30
40
50
r [microns]
32-45 MIN SEDIMENTATION DATA; N(r)*r3

FIG. 8B

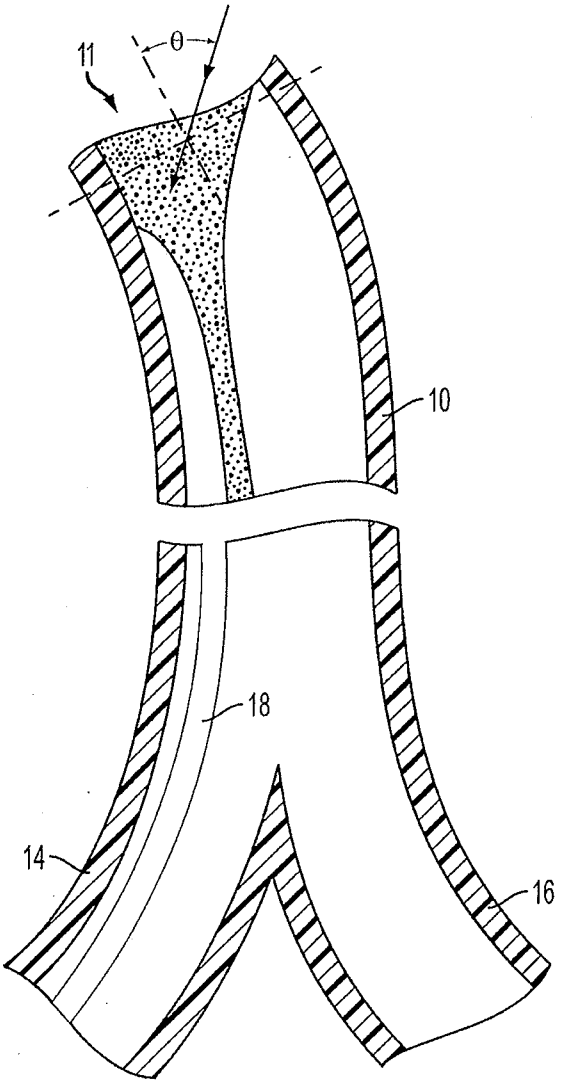

FIG. 9

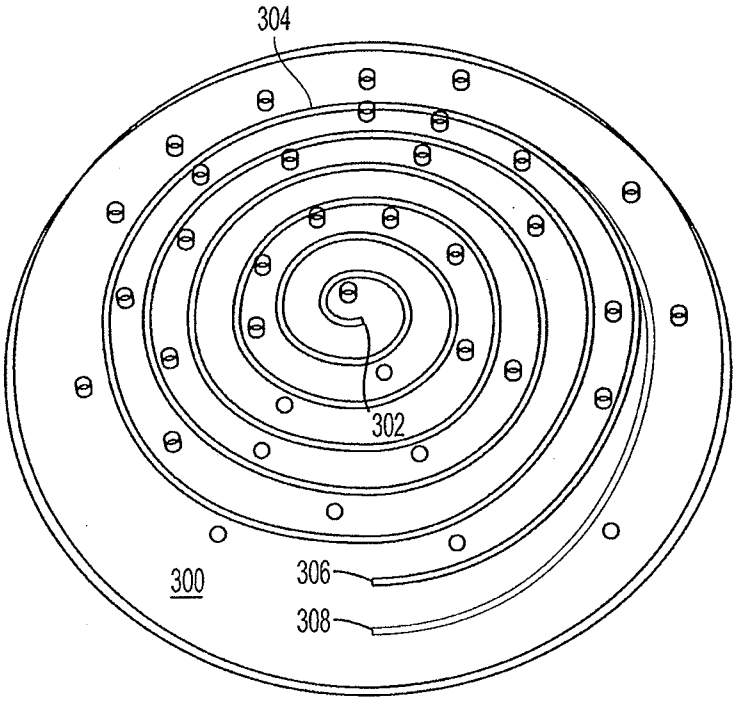

FIG. 10