(12) INTERNATIONAL APPLICATION PUBLISHED UNDER THE PATENT COOPERATION TREATY (PCT)

(19) World Intellectual Property Organization
International Bureau

(43) International Publication Date
10 July 2003 (10.07.2003)

PCT

(10) International Publication Number
WO 03/056127 A1

(51) International Patent Classification[7]: E21B 34/00, 21/10, F16K 31/122

(21) International Application Number: PCT/US02/40746

(22) International Filing Date:
18 December 2002 (18.12.2002)

(25) Filing Language: English

(26) Publication Language: English

(30) Priority Data:
10/036,997 21 December 2001 (21.12.2001) US

(71) Applicant: COOPER CAMERON CORPORATION [US/US]; 1333 West Loop South, Suite 1700, Houston, TX 77027 (US).

(72) Inventors: HOANG, Loc, G.; 9902 Arrow Grass Drive, Houston, TX 77064 (US). KILMOYER, Jim, E.; 5830 Grape Street, Houston, TX 77044 (US).

(74) Agent: HARTMANN, Michael, P.; Cooper Cameron Corporation, P.0. Box 1212, Houston, TX 77251-1212 (US).

(81) Designated States *(national)*: AE, AG, AL, AM, AT, AU, AZ, BA, BB, BG, BR, BY, BZ, CA, CH, CN, CO, CR, CU, CZ, DE, DK, DM, DZ, EC, EE, ES, FI, GB, GD, GE, GH, GM, HR, HU, ID, IL, IN, IS, JP, KE, KG, KP, KR, KZ, LC, LK, LR, LS, LT, LU, LV, MA, MD, MG, MK, MN, MW, MX, MZ, NO, NZ, OM, PH, PL, PT, RO, RU, SD, SE, SG, SK, SL, TJ, TM, TN, TR, TT, TZ, UA, UG, UZ, VN, YU, ZA, ZM, ZW.

(84) Designated States *(regional)*: ARIPO patent (GH, GM, KE, LS, MW, MZ, SD, SL, SZ, TZ, UG, ZM, ZW),

[Continued on next page]

(54) Title: PRESSURE COMPENSATION/CONTROL FOR FAIL-SAFE GATE VALVE

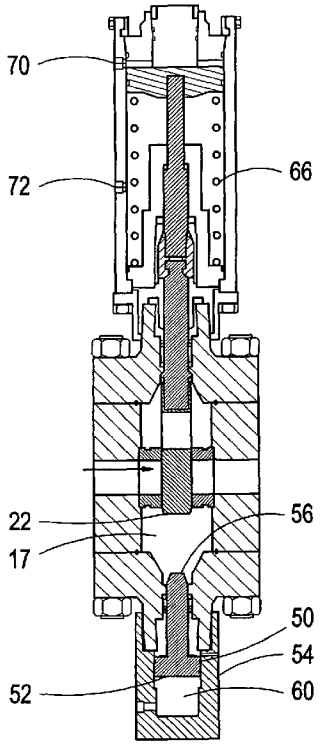

(57) Abstract: A fail-safe gate valve (10) for sub-sea use features a floating, pressure biased compensating piston (50) whose movement prevents internal pressure buildup from opening movement of the gate (22). A pre-charged fluid chamber (17) provides the bias on the balancing piston (50). Using unequal piston diameters reduces the charge pressure. The balancing piston (50) is not connected to the gate (22) so that internal pressures can be employed to act on a net area, which biases the gate (22) toward its fail-safe position.

WO 03/056127 A1

Eurasian patent (AM, AZ, BY, KG, KZ, MD, RU, TJ, TM), European patent (AT, BE, BG, CH, CY, CZ, DE, DK, EE, ES, FI, FR, GB, GR, IE, IT, LU, MC, NL, PT, SE, SI, SK, TR), OAPI patent (BF, BJ, CF, CG, CI, CM, GA, GN, GQ, GW, ML, MR, NE, SN, TD, TG).

For two-letter codes and other abbreviations, refer to the "Guidance Notes on Codes and Abbreviations" appearing at the beginning of each regular issue of the PCT Gazette.

Published:

— *with international search report*